SUZUKI

PARTS CATALOGUE

APK310(TYPE 3)
APK414(TYPE 3,4)

VITARA

E2/E22

2019-11

4TH EDITION

This part catalogue supersedes all the following part catalogue with immediate effect

Model of catalogue	Parts catalogue No.
APK310(TYPE 3) APK414(TYPE 3,4)	9900B-40320-002

APK310-3/APK414-3/APK414-4

General Information

This parts catalogue covers all service parts for SUZUKI VITARA APK310-3,APK414-3, APK414-4.
APK310-3,APK414-3,APK414-4 have various specifications with the combination of grade, intended markets etc., and all of those related parts are compiled in this catalogue.
For easier and exact reference of parts required for a certain vehicle, various marks are put in the remarks column of the catalogue.
Exact parts required can be located by referring to this remark, the engine serial number of the vehicle and the information given in the model identification plate, which is provided for each vehicle in the location as illustrated below.

1. Location of the model identification plate

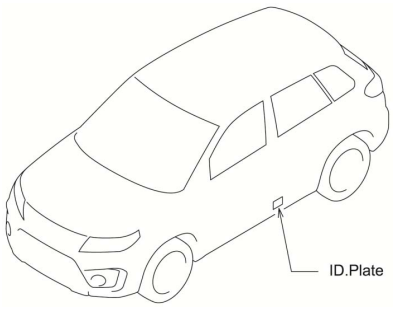

2. Information in the identification plate

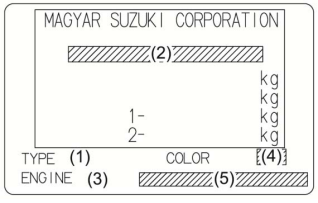

(1) TYPE : type of vehicle

(2) V.I.N. starting from :
K10C : 2WD
TSMLYD01S00600001
TSMLYD01S00750001 (from 2019-9)
K10C : 4WD
TSMLYE01S00600001
TSMLYE01S00750001 (from 2019-9)
K14C : 2WD
TSMLYDA1S00600001
TSMLYDA1S00750001 (from 2019-9)
K14C : 4WD
TSMLYEA1S00600001
TSMLYEA1S00750001 (from 2019-9)
K14D : 2WD
TSMLYDD1S00800001
K14D : 4WD
TSMLYED1S00800001

(3) ENGINE : type of engine

(4) COLOR : color code of the vehicle

(5) Model code : nine-digit code is provided

Model code is provided for easier and exact distinction of the model among various models available due to combination of different grades, intended markets etc..
The composition of the model code and the meaning of each letter or numeral at each digit are as follows.
Model code is composed of 9 characters. Taking the code " PK6313F02 " for instance,

1). The 1st and 2nd character indicates Vehicle type by letter;
2). The 3rd character indicates Engine type by letter;
"6" means the combination of a 4 cycles, 4 cylinder, 1373cc gasoline engine.
3). The 4th character indicates Model generation by letter;
"3" means Type 3.
4). The 5th character indicates Body type by letter;
"1" means N/SUNROOF.
5). The 6th character indicates Transmission by letter;
"3" means 6-speed manual transmission.
6). The 7th character indicates Grade by letter;
"F" means GL grade.
7). The 8th and 9th characters indicate Destination (Handle position);
"02" means for UK Ireland market (Right hand drive).

As can be seen from 1) through 7) above, model code PK6313F02 means;
4 cycles, 4 cylinder, 1373cc gasoline engine, Type 3, N/SUNROOF,
6-speed manual transmission, GL grade,
for UK Ireland market (Right hand drive).

A reference table between model code and indications in the remarks column of the parts catalogue is shown below.

Character	*Model code	Description	Indication in remarks column of catalogue
1st 2nd	PK	Vehicle	VITARA
3rd	4	Engine	K10C
	6		K14C
	F		K14D
4th	3	Model generation	TYPE 3
	4		TYPE 4
5th	1	Body type	N/SUNROOF
	2		W/SUNROOF
6th	2,L	Transmission	5MT (5-speed manual transmission)
	3,M		6MT (6-speed manual transmission)
	S,X		6AT (6-speed automatic transmission)
7th	C,D,F,G	Grade	GL
	K		GLX
8th 9th	02	Destination	E2 : RHD
	22		E22 : LHD

NOTE : Model code elements listed in the model code column show all the code elements existing at the time of compilation of this catalogue.

New code elements will be provided in future when different grades of this vehicle are put into production.

3. Engine serial number

Engine serial number for APK310 and APK414 is provided in the location illustrated below,

starting from

K10C- 1000001 (APK310 : GASOLINE : 998cc)
K14C- 1000001 (APK414 : GASOLINE : 1373cc)
K14D- 1000001 (APK414 : GASOLINE : 1373cc)

GASOLINE (APK310)

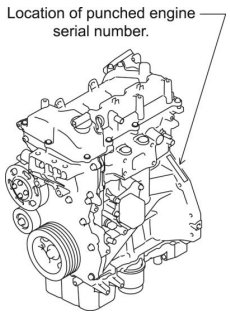

K10C

GASOLINE (APK414)

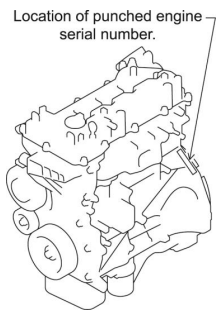

K14C

GASOLINE (APK414)

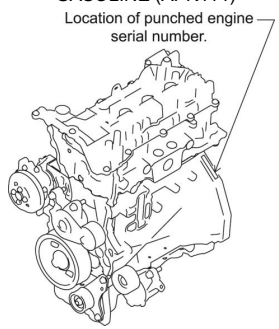

K14D

4. Dimensions

Dimensions of the parts in this catalogue are indicated in millimeters.

5. Abbreviations

Abbreviations used in this catalogue are as follows:

A	: Ampere
A	: Ampere
A/B	: Air bag
A/C	: Air conditioner
A/F	: Air fuel ration
ABV	: Air bypass valve
ACC	: Accessory or Adaptive cruise control
ADJ	: Adjuster
AEB	: Automatic emergency brake
ALUMI	: Aluminum
APRN	: Apron
ASST	: Assistant
ASSY	: Assembly
AT	: Automatic transmission
BK	: Brake
BRG	: Bearing
BRKT	: Bracket
BS	: BRIDGESTONE
BSTR	: Booster
BTRY	: Battery
C	: Celsius scale
CL	: Clutch
CLG	: Cooling
CLNR	: Cleaner
CLPR	: Caliper
CLR	: Cleaner
CNTR	: Counter
COL	: Column
COMB	: Combination
CON	: Conditioner
CONT	: Control
CSL	: Console
CSTR	: Canister
CTLST	: Catalytic
CTR	: Center
CTSHFT	: Counter shaft
CYL	: Cylinder
D	: Diameter of material
DAB	: Digital audio broadcast
DC	: Direct current
DEF	: Defroster
DEG	: Degassing
DFR	: Defroster
DIFF	: Differential
DIR	: Direct
DR	: Door or Drive
DRL	: Day-time running light
DRVR	: Driver
E.P.S	: Electric power steering
EASS	: Engine auto stop and start
EGR	: Exhaust gas recirculation
ELEC	: Electric
ELR	: Emergency lock retractor
ENG	: Engine
EPI	: Electric petrol injection
EPS	: Electric power steering
ESP	: Electronic stability program
EVAP	: Evaporator
EXH	: Exhaust
FL	: Floor
FLR	: Floor
FLTR	: Filter
FNDR	: Fender
FR	: Front
G	: Gram
GEN	: Generator
GL	: GL grade
GLX	: GLX grade
GND	: Ground
GPS	: Global positioning system
GR	: Gear
GRL	: Grille
HDL	: Handle
HNG	: Hinge
HTR	: Heater
HU	: Hydraulic unit
HVAC	: Heating ventilation and air conditioning
HYDR	: Hydrolytic

I/C	: Inter cooler
I/P	: Instrument panel
ID	: Inside diameter or identification or idle
IGN	: Ignition
ILLUM	: Illumination
IMM	: Immobilizer
INJ	: Injection
INP	: Input
INR	: Inner
INS	: Inside
INTK	: Intake
ISG	: Integrated starter generator
KHZ	: Kilohertz
KLS	: Keyless
L	: Length or left hand
LDW	: Lane departure warning
LH	: Left hand
LHD	: Left hand drive
LUB	: Lubrication
LWR	: Lower
MA	: Master or Main
MAF	: Main air flow
MANF	: Manifold
MBR	: Member
MGU	: Motor generator unit
MIC	: Microphone
MIR	: Mirror
MT	: Manual transmission
MTG	: Mounting
N/	: Non
NDL	: Needle
NGK	: NGK SPARK PLUG
NO.	: Number
OBD	: On board diagnostics
OCV	: Oil control valve
OD	: Outside diameter
OPNG	: Opening
OPT	: Optional
OTR	: Outer
P/W	: Power window
PASS	: Passenger
PCV	: Positive crankcase ventilation
PLNTY	: Planetary
PLR	: Pillar
PNL	: Panel
PNN	: Pinion
POSN	: Position
PRI	: Primary
PROP	: Propeller
QTR	: Quarter
R	: Right hand
RCLNG	: Reclining
RDTR	: Radiator
REINF	: Reinforcement
REMOCON	: Remote control
REV	: Reverse
RGLTR	: Regulator
RH	: Right hand
RHD	: Right hand drive
RR	: Rear
RSV	: Reserve
RSVR	: Reservoir
RTN	: Return
SEC	: Secondary
SEL	: Select
SFT	: Shaft
SHF	: Shift
SIG	: Signal
SNSR	: Sensor
SOL	: Solenoid
SPNSN	: Suspension
SPR	: Spring
SPRKT	: Sprocket
SPRT	: Support
ST	: Starter
STD	: Standard
STRG	: Steering
SUCT	: Suction
SW	: Switch
SYNC	: Synchronizer

T	: Thickness	W	: Watt or wide
T/C	: Torque converter	W/	: With
T/F	: Transfer	WDO	: Window
T/M	: Transmission	WG	: Waste gate
TC	: Turbo charger	WTR	: Water
TEMP	: Temperature		
THR	: Thrust	1ST	: First
TNL	: Tunnel	2ND	: Second
TPMS	: Tire pressure monitoring system	2WD	: 2 Wheel drive
		3RD	: Third
TRQ	: Torque		
		4TH	: Fourth
UPR	: Upper	4WD	: 4 Wheel drive
US	: Under size	5TH	: Fifth
USB	: Universal serial bus	6TH	: Sixth
V	: Volt	&	: And
VSV	: Vacuum switching valve		
VVT	: Variable valve timing		

12 x 34 x 10 ·····Figures in the description column show the millimeter dimensions of parts.
ID OD T(or W,L)

->12345-81A00 (Parts no.) : Indicates that the part no. was changed to 12345-81A00 and the new parts are interchangeable with former ones, but the former ones are not interchangeable with the new ones.

<-12345-81A00 (Parts no.) : Indicates that the former and new parts are interchangeable with each other and both are usable.

6. Inner parts of an assembly
   Part numbers that have a period (.) mark in front of the description on a text page are separately-available parts of the assembly.

7. Parts change notice
   Parts change notice will be sent on all occasions when parts number changes occur, including interchangeable modifications between new parts and old ones.

8. Notes
   8-1. There are sometimes differences between spare parts and the parts used originally in production models due to administrative reasons and common use with other models.

   8-2. Rubber hoses and vinyl tubes should be cut to size in accordance with information detailed in the parts catalogue.

   8-3. Note that the drawing on the illustration pages are for ready reference of spare parts numbers and are not to be used as an assembly manual. When assembling, please refer to the appropriate "SUZUKI SERVICE MANUAL".

9. Specification code
   This catalogue contains the parts for the models designed for the following markets:

   Spec. code (Market code) : E2 and E22.

MILLIMETER → INCH CONVERSION CHART

	0	1	2	3	4	5	6	7	8	9
00	.000	.039	.079	.118	.157	.197	.236	.276	.315	.354
10	.394	.433	.472	.512	.551	.591	.630	.669	.709	.748
20	.787	.827	.866	.906	.945	.984	1.024	1.063	1.102	1.142
30	1.181	1.220	1.260	1.299	1.339	1.378	1.417	1.457	1.496	1.535
40	1.575	1.614	1.654	1.693	1.732	1.772	1.811	1.850	1.890	1.929
50	1.969	2.008	2.047	2.087	2.126	2.165	2.205	2.214	2.283	2.323
60	2.362	2.402	2.441	2.480	2.520	2.559	2.598	2.638	2.677	2.717
70	2.756	2.795	2.835	2.874	2.913	2.953	2.992	3.031	3.071	3.110
80	3.150	3.189	3.228	3.268	3.307	3.346	3.386	3.425	3.465	3.504
90	3.543	3.583	3.622	3.661	3.701	3.740	3.780	3.819	3.858	3.898

How to read

	0	1	2	3	4
00	…	…	…	…	…
10	…	…	…	…	…
20	…	…	…	0.906	…
30	…	…	…	…	…

23 millimeters equal 0.906 inch

Contents are subject to change without notice or obligation.

COLOR CHART
TABLEAU DES COULEURS

COLOR NO. NO DE COULEUR	COLOR DESCRIPTION DESCRIPTION DE COULEUR	COLOR NO. NO DE COULEUR	COLOR DESCRIPTION DESCRIPTION DE COULEUR
ANT	PKH,V3Z	BZU	ZCC,5PK
AN4	PET,V3Z	BZV	ZCD,5PK
AQK	0PG,0CE,ZCA	BZW	ZCE,5PK
AQS	5PK,PEQ	BZY	ZCF,5PK
ASJ	PET,5PK	C48	0PG,5PK
A6H	26U,ZQN	C7Y	QL9,PKG,PKH,V3Z,P4Z,5PK
A9G	ZCE,ZCD	C7Z	QL9,PKG,PKH,V3Z,R3F,P4Z,5PK,PET
A9H	ZCE,ZCF	C8B	5PK,PET,QMC
A9L	ZCE,ZQN	C8J	5PK,QMC
A9N	ZCE,ZQQ	C8K	5PK,PKH,PQW,QMC
A9R	ZQN,5PK	DBF	ZCE,ZZD
A9T	ZQQ,5PK	DBG	26U,ZZE
A93	ZPR,PRP	DBH	ZCE,ZZE
BAE	5PK,PQV,PET,P4Z	DBJ	ZZE,5PK
BAM	5PK,PQV,PET,P4Z,R3F	DBK	ZZD,5PK
BAN	5PK,PQV,PET,P4Z,V3Z	DBW	QMC,ZPR,0CB
BAP	5PK,PQV,PET,P4Z,R3F,V3Z	DBY	QMD,ZPR,0CB
BHE	5PK,6GS	DB7	0CE,0PG
BJB	PQW,5PK	DHW	5PK,QAJ,0PG
BKZ	ZCA,0PG	EAR	QL9,PKG,PKH,V3Z,P4Z,5PK,WM3
BML	ZPR,0CB	EZZ	ZNL,5PK
BVV	0PG,QAR	GJL	5PK,ZML

COLOR NO. NO DE COULEUR	COLOR DESCRIPTION DESCRIPTION DE COULEUR	COLOR NO. NO DE COULEUR	COLOR DESCRIPTION DESCRIPTION DE COULEUR
GMY	R3F,5PK	V3Z	STITCH.CRV WHITE
HTV	5PK,0PG,ZML	WM3	LTHR.'18 TPF BLACK
HZG	5PK,ZML,W9J	W9J	LTHR.BOOTS BLACK
H22	0BK,5PK	ZCA	SLD.'04 BLACK
N49	5PK,799	ZCC	MET.SILKY SILVER 2
PEQ	CHROME SATIN BLACK	ZCD	MET.GALACTIC GRAY
PET	WOV.'13 BIAS BLACK	ZCE	PRME.COSMIC BLACK
PKG	RLTHR.'13 BLACK	ZCF	SLD.BRIGHT RED 5
PKH	LTHR.'13 BLACK	ZML	MET.'08 BRIGHT SILVER
PLT	SOFT LIGHT GRAY	ZMS	08 WGR WH BLACK
PNG	ALUMITE 13 SILVER	ZNL	PRL.COOL WHITE
PQV	WOV.HEXUS BLACK	ZPR	CHROME MAT 2
PQW	WOV.SUEDE CHAMONIX PLAIN BLACK	ZQN	PRME.ATLANTIS TURQUOISE
PRP	SLD.CHARCOAL GRAY	ZQQ	MET.SAVANNA IVORY
P4Z	00 DARK GRAY	ZZD	MET.ICE GRAYISH BLUE
QAJ	CHROME. VIT DARK SMOKE	ZZE	PRME.SOLAR YELLOW
QAR	CHROME HYBRID BLUE	0BK	MEDIUM GRAY M/T
QHD	MET.16 SILVER	0CB	BLACK 30/GROSS
QL9	WOV.SUEDE FLORES BLACK	0CE	BLACK FULL GROSS
QMC	MET.16 SATIN DARK SILVER	0PG	CHROME S
QMD	CHROME.SQUARE DOT BLACK	09L	BLACK
R3F	CARP. '01 BLACK	2KW	26U,5PK

COLOR CHART
TABLEAU DES COULEURS

COLOR NO. NO DE COULEUR	COLOR DESCRIPTION DESCRIPTION DE COULEUR	COLOR NO. NO DE COULEUR	COLOR DESCRIPTION DESCRIPTION DE COULEUR
26U	WHITE		
27N	TWINCRYSTALSILVERM/T		
5PK	BLACK		
6GS	SOFT GRAY		
799	PRIMARY		

COLOR NO. NO DE COULEUR	COLOR DESCRIPTION DESCRIPTION DE COULEUR	COLOR NO. NO DE COULEUR	COLOR DESCRIPTION DESCRIPTION DE COULEUR

FIG.101A

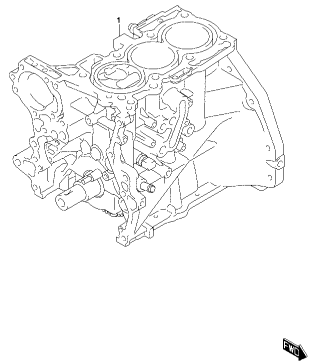

APK414-3 P22 101A
SHORT ENGINE ASSY (1)

FIG.101B

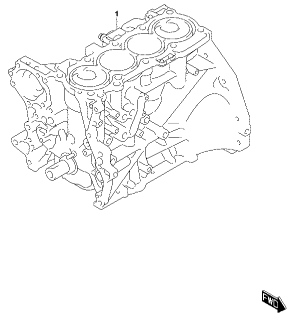

APK414-3 P22 101B
SHORT ENGINE ASSY (2)

FIG.101C

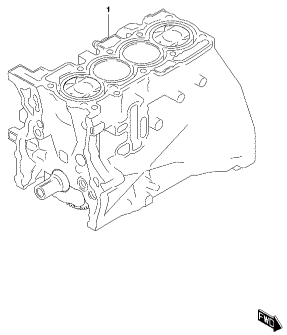

APK414-3 P22 101C
SHORT ENGINE ASSY (3)

FIG.105A

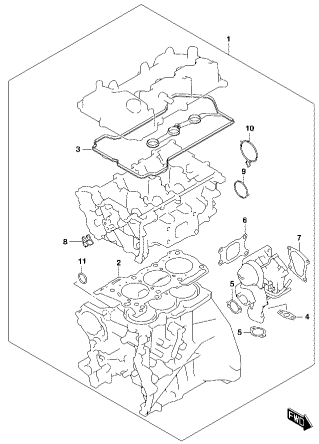

APK414-3 P22 105A
ENGINE GASKET SET (1)

FIG.105B

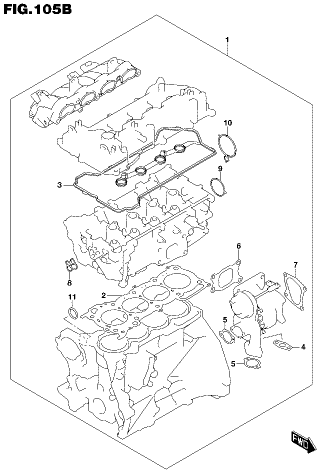

APK414-3 P22 105B
ENGINE GASKET SET (2)

FIG.105C

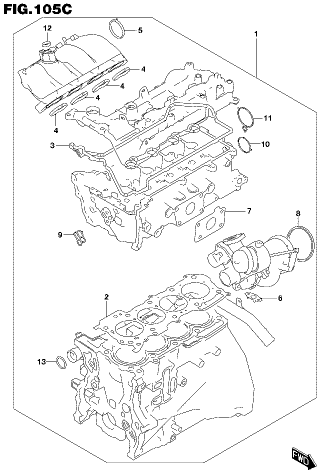

APK414-3 P22 105C
ENGINE GASKET SET (3)

FIG.111A

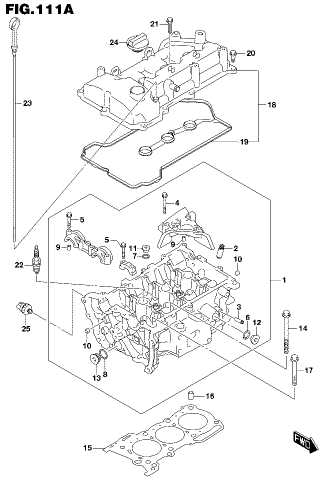

APK414-3 P22 111A
CYLINDER HEAD (1)

FIG.111B

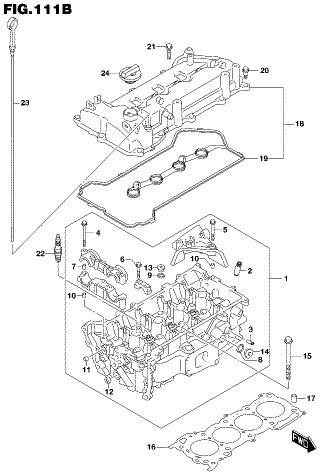

APK414-3 P22 111B
CYLINDER HEAD (2)

FIG.111C

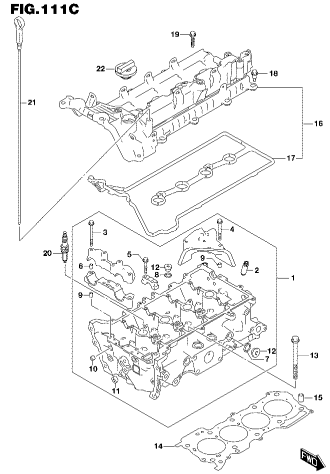

APK414-3 P22 111C
CYLINDER HEAD (3)

FIG.112A

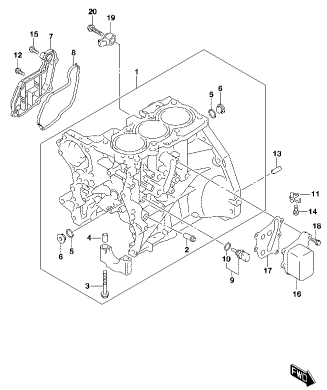

APK414-3 P22 112A
CYLINDER (1)

FIG.112B

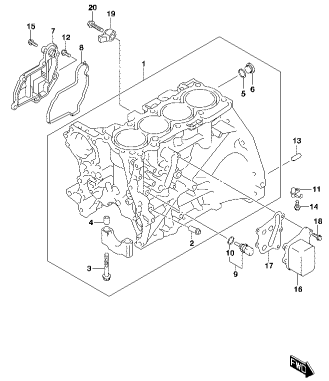

APK414-3 P22 112B
CYLINDER (2)

FIG.112C

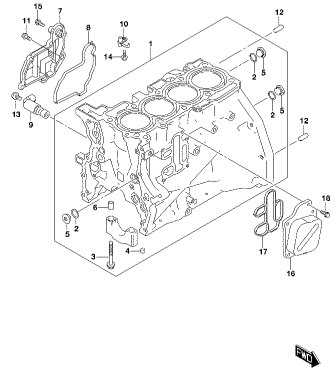

APK414-3 P22 112C
CYLINDER (3)

FIG.115A

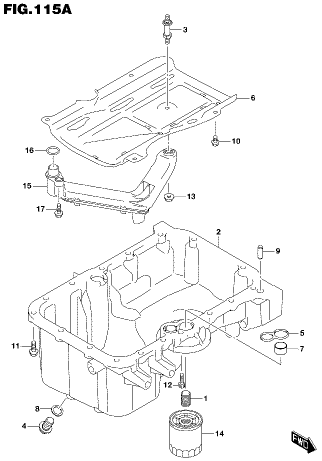

APK414-3 P22 115A
OIL PAN (1)

FIG.115B

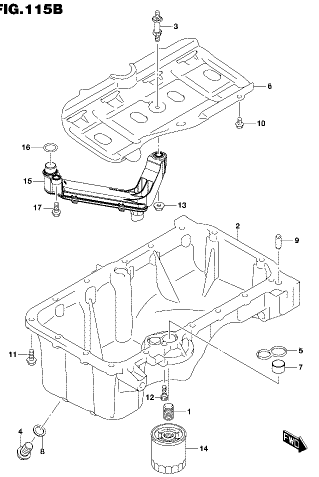

APK414-3 P22 115B
OIL PAN (2)

FIG.115C

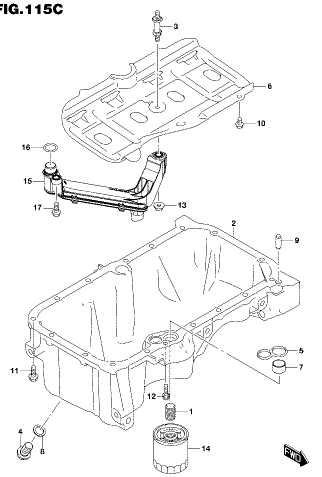

APK414-3 P22 115C
OIL PAN (3)

FIG.120A

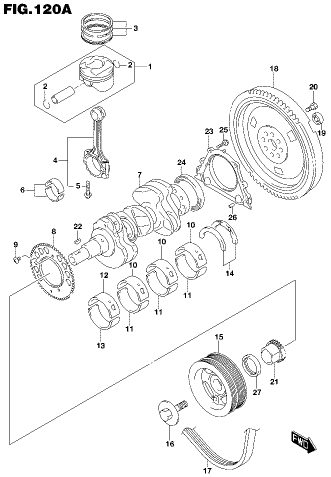

APK414-3 P22 120A
CRANKSHAFT (1)

FIG.120B

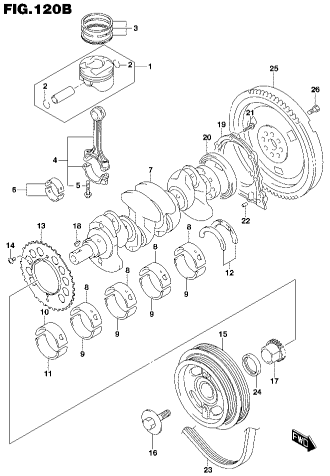

APK414-3 P22 120B
CRANKSHAFT (2)

FIG.120C

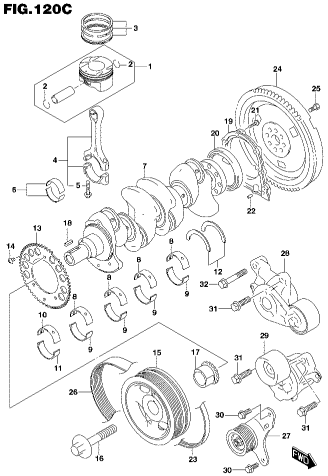

APK414-3 P22 120C
CRANKSHAFT (3)

FIG.122A

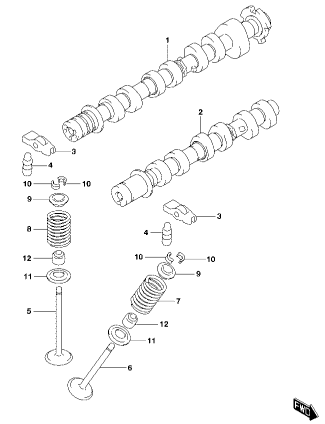

APK414-3 P22 122A
CAM SHAFT/VALVE (1)

FIG.122B

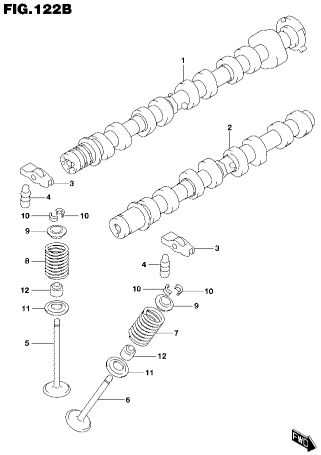

APK414-3 P22 122B
CAM SHAFT/VALVE (2)

FIG.122C

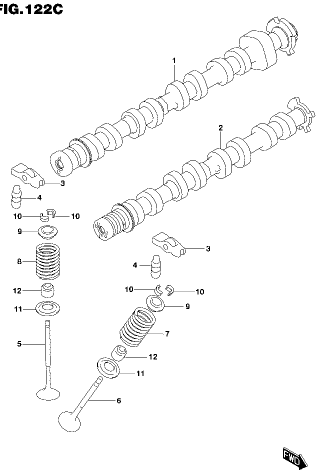

APK414-3 P22 122C
CAM SHAFT/VALVE (3)

FIG.124A

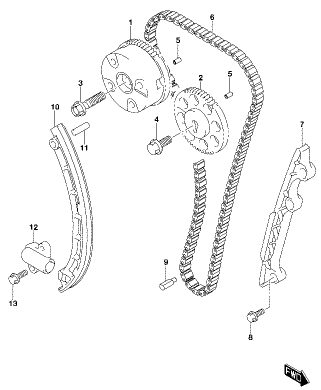

APK414-3 P22 124A
CAM CHAIN (1)

FIG.124B

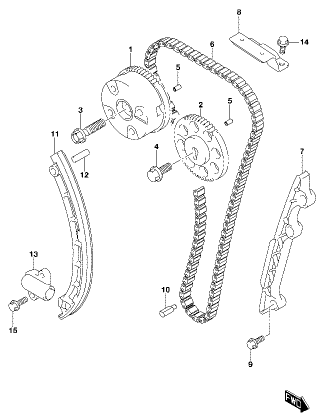

APK414-3 P22 124B
CAM CHAIN (2)

FIG.124C

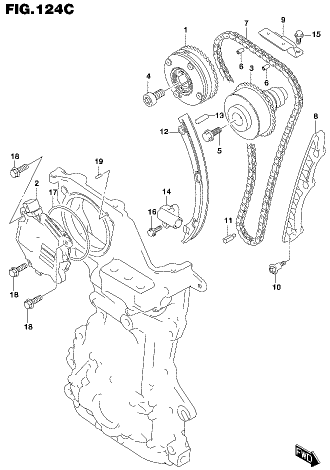

APK414-3 P22 124C
CAM CHAIN (3)

FIG.128A

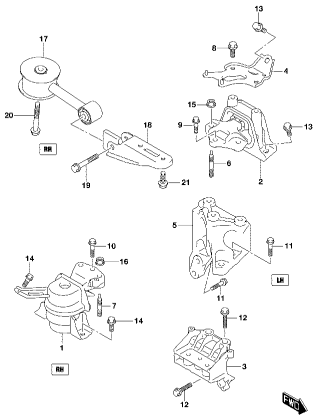

APK414-3 P22 128A
ENGINE MOUNTING (1)

FIG.128B

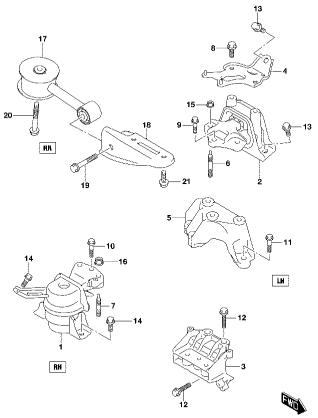

APK414-3 P22 128B
ENGINE MOUNTING (2)

FIG.128C

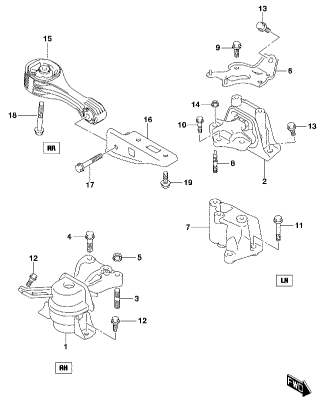

APK414-3 P22 128C
ENGINE MOUNTING (3)

FIG.128D

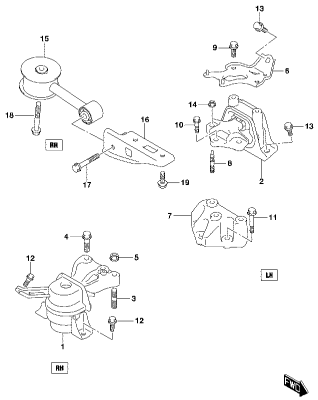

APK414-3 P22 128D
ENGINE MOUNTING (4)

FIG.128E

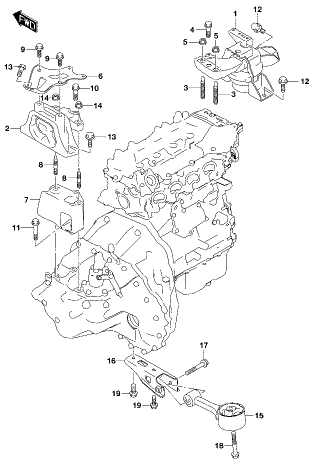

APK414-3 P22 128E
ENGINE MOUNTING (5)

FIG.130A

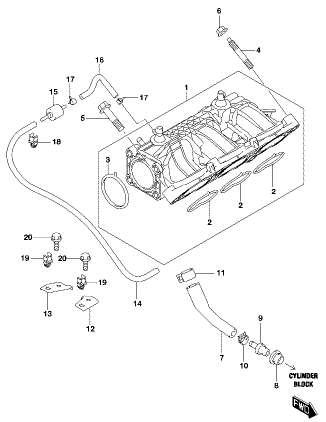

APK414-3 P22 130A
INTAKE MANIFOLD (1)

FIG.130B

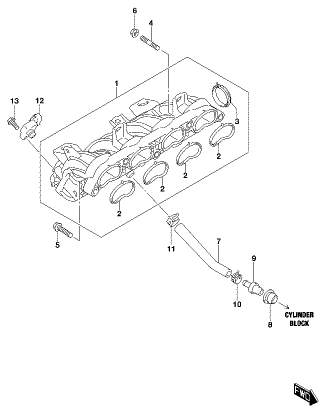

APK414-3 P22 130B
INTAKE MANIFOLD (2)

FIG.130C

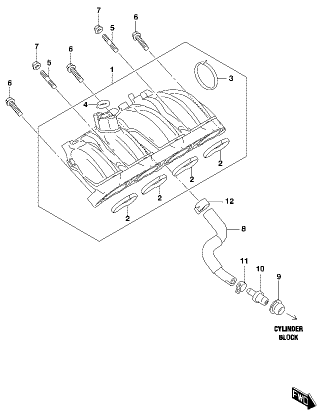

APK414-3 P22 130C
INTAKE MANIFOLD (3)

FIG.142A

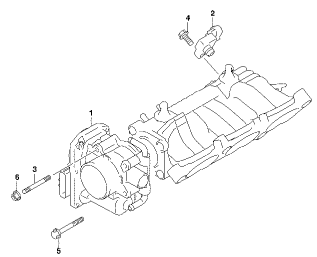

APK414-3 P22 142A
THROTTLE BODY (1)

FIG.142B

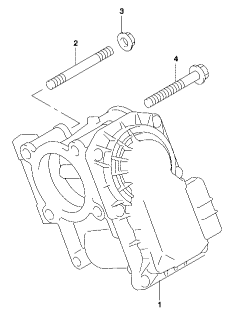

APK414-3 P22 142B
THROTTLE BODY (2)

FIG.142C

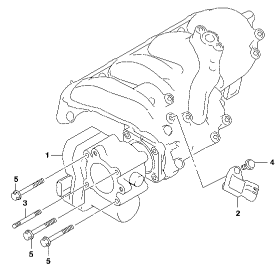

APK414-3 P22 142C
THROTTLE BODY (3)

FIG.150A

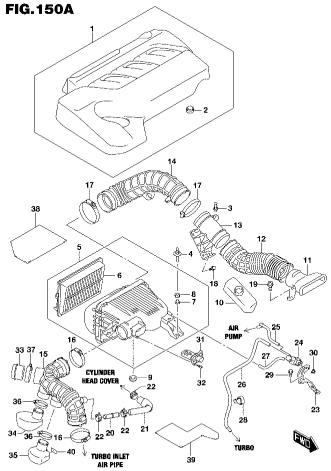

APK414-3 P22 150A
AIR CLEANER (1)

FIG.150B

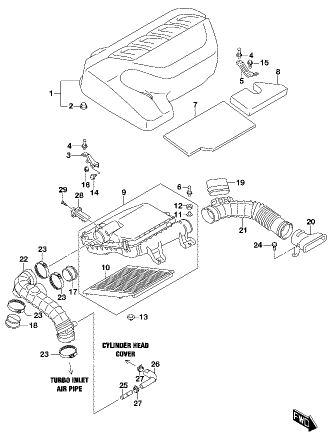

APK414-3 P22 150B
AIR CLEANER (2)

FIG.150C

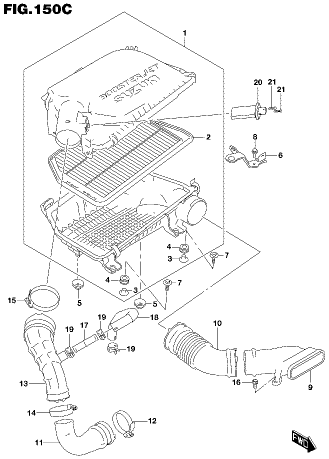

APK414-3 P22 150C
AIR CLEANER (3)

FIG.153A

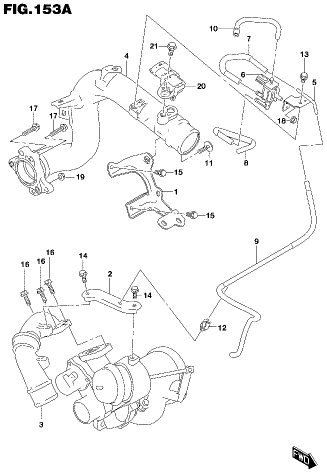

APK414-3 P22 153A
TURBO CONTROL HOSE

FIG.154A

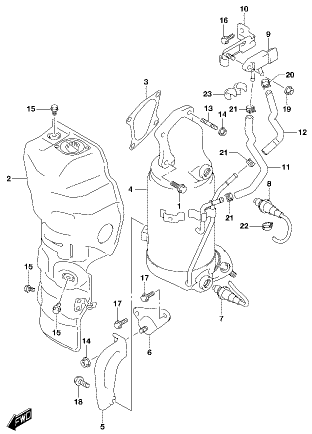

APK414-3 P22 154A
EXHAUST MANIFOLD (1)

FIG.154B

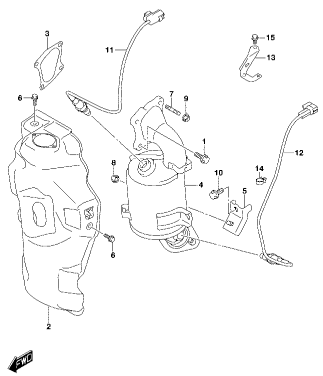

APK414-3 P22 154B
EXHAUST MANIFOLD (2)

FIG.154C

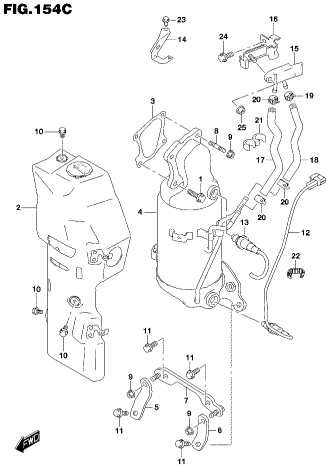

APK414-3 P22 154C
EXHAUST MANIFOLD (3)

FIG.154D

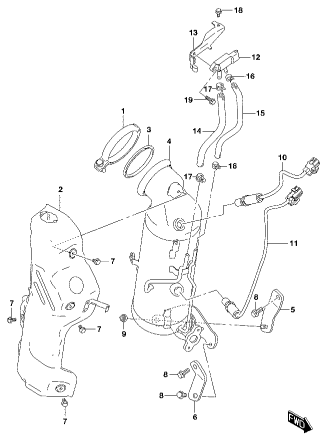

APK414-3 P22 154D
EXHAUST MANIFOLD (4)

FIG.156A

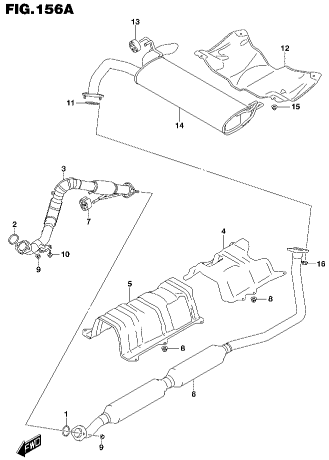

APK414-3 P22 156A
MUFFLER (1)

FIG.156B

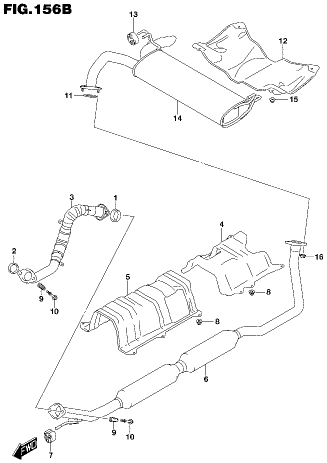

APK414-3 P22 156B
MUFFLER (2)

FIG.156C

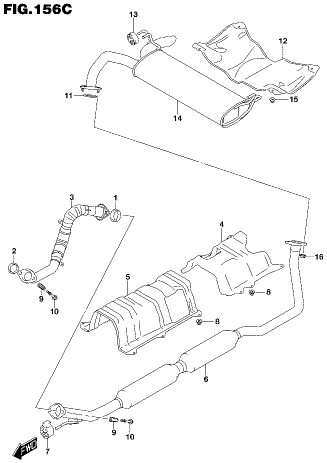

APK414-3 P22 156C
MUFFLER (3)

FIG.158A

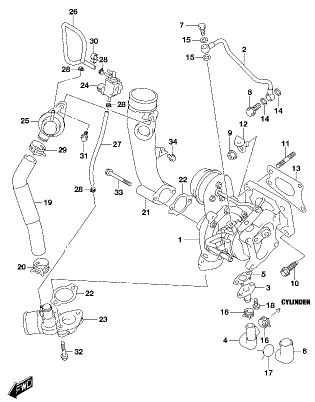

APK414-3 P22 158A
TURBO CHARGER (1)

FIG.158B

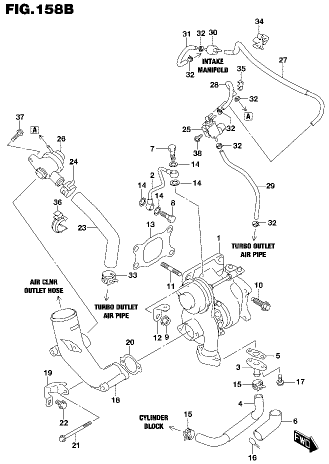

APK414-3 P22 158B
TURBO CHARGER (2)

FIG.158C

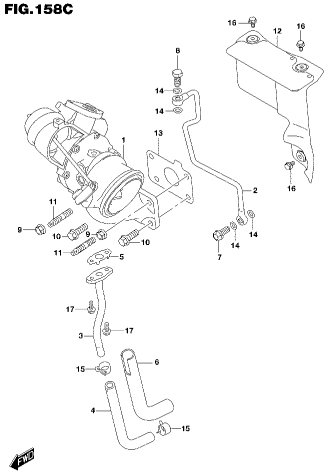

APK414-3 P22 158C
TURBO CHARGER (3)

FIG.159A

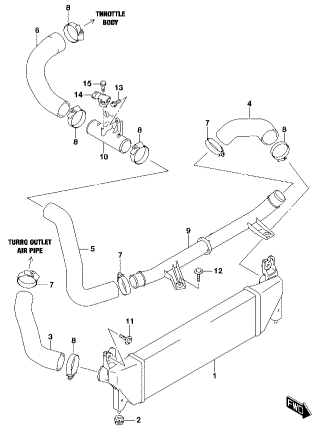

APK414-3 P22 159A
INTER COOLER (1)

FIG.159B

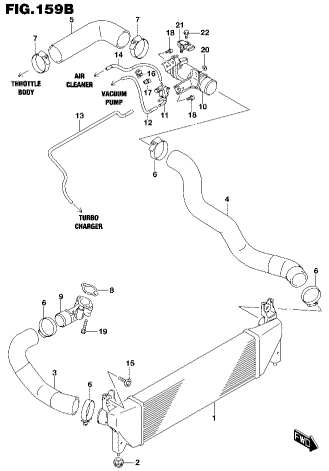

APK414-3 P22 159B
INTER COOLER (2)

FIG.159C

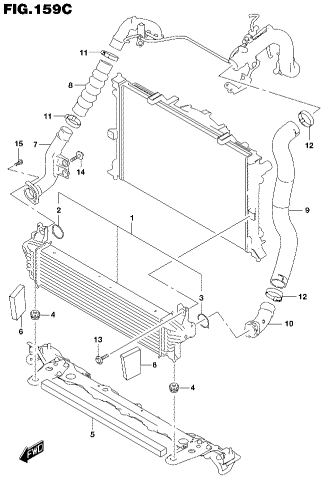

APK414-3 P22 159C
INTER COOLER (3)

FIG.160A

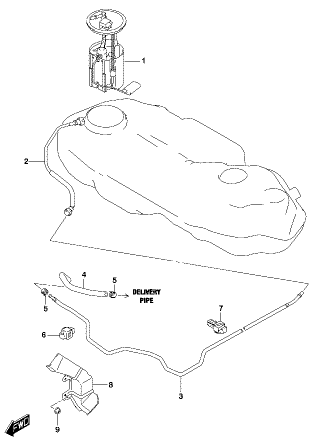

APK414-3 P22 160A
FUEL PUMP (1)

FIG.160B

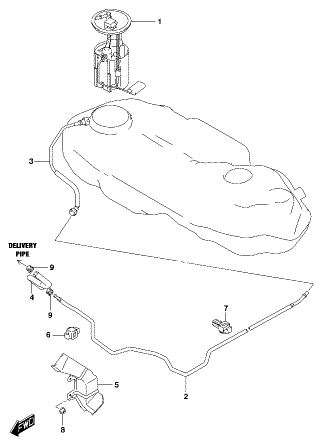

APK414-3 P22 160B
FUEL PUMP (2)

FIG.160C

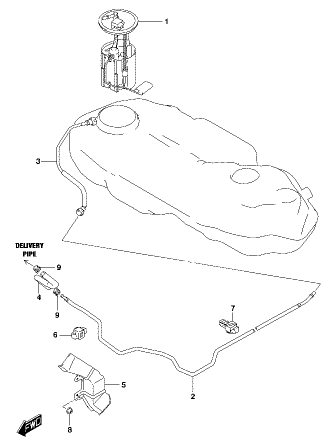

APK414-3 P22 160C
FUEL PUMP (3)

FIG.172A

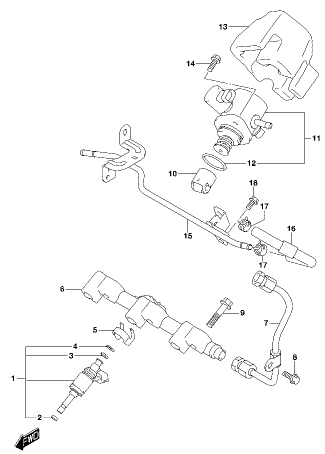

APK414-3 P22 172A
DELIVERY PIPE/FUEL INJECTOR (1)

FIG.172B

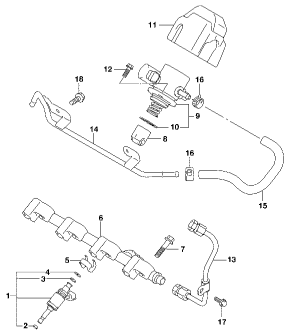

APK414-3 P22 172B
DELIVERY PIPE/FUEL INJECTOR (2)

FIG.172C

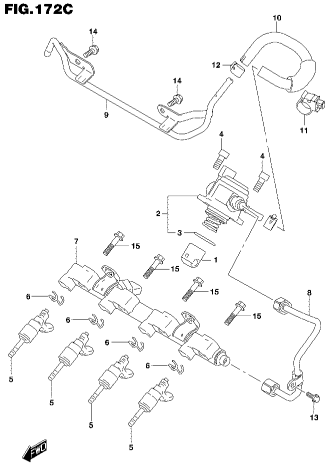

APK414-3 P22 172C
DELIVERY PIPE/FUEL INJECTOR (3)

FIG.176A

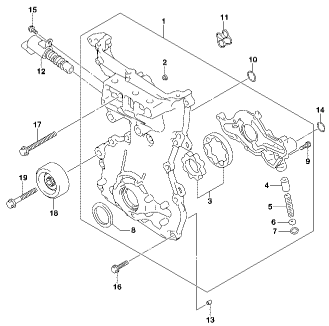

APK414-3 P22 176A
OIL PUMP (1)

FIG.176B

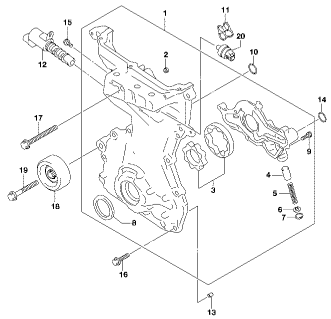

APK414-3 P22 176B
OIL PUMP (2)

FIG.176C

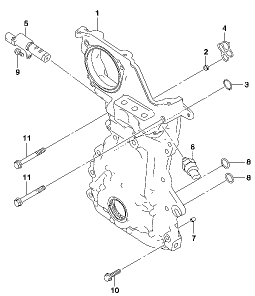

APK414-3 P22 176C
OIL PUMP (3)

FIG.180A

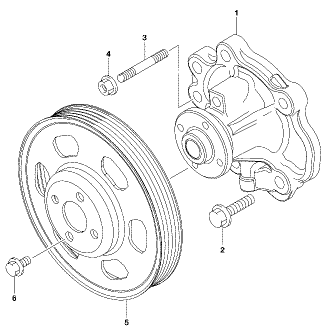

APK414-3 P22 180A
WATER PUMP (1)

FIG.180B

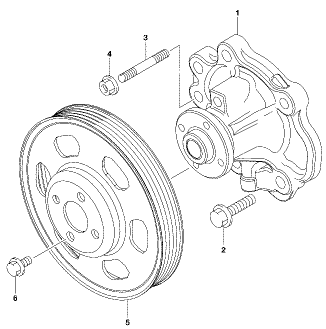

APK414-3 P22 180B
WATER PUMP (2)

FIG.180C

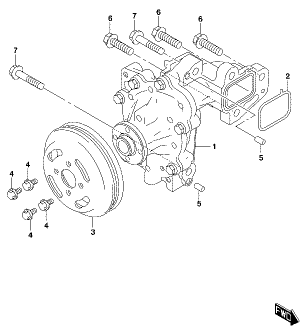

APK414-3 P22 180C
WATER PUMP (3)

FIG.184A

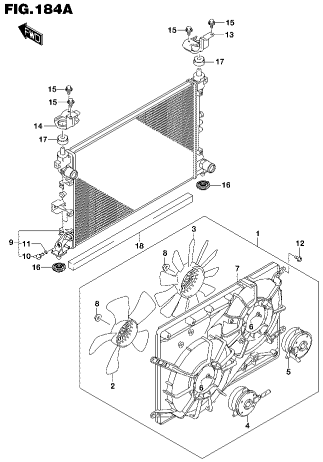

APK414-3 P22 184A
RADIATOR (1)

FIG.184B

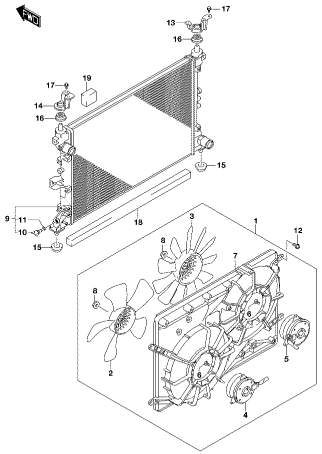

APK414-3 P22 184B
RADIATOR (2)

FIG.184C

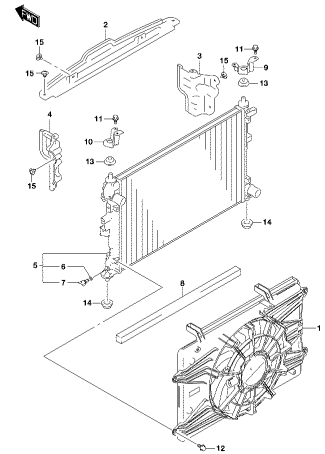

APK414-3 P22 184C
RADIATOR (3)

FIG.188A

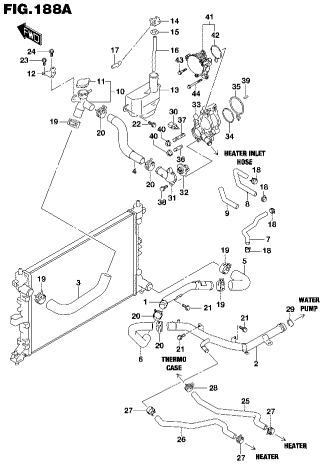

APK414-3 P22 188A
WATER HOSE (1)

FIG.188B

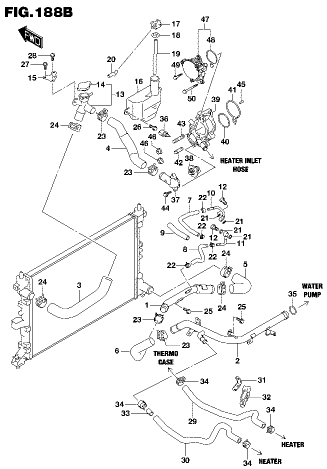

APK414-3 P22 188B
WATER HOSE (2)

FIG.188C

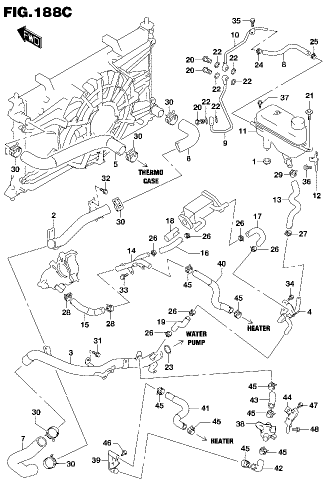

APK414-3 P22 188C
WATER HOSE (2)

FIG.18PA

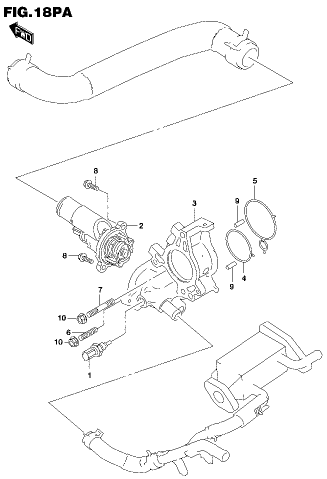

APK414-3 P22 18PA
THERMOSTAT

FIG.190A

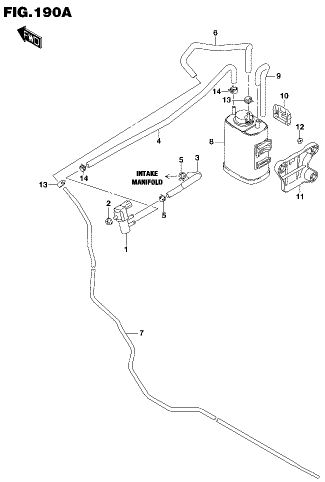

APK414-3 P22 190A
EMISSION CONTROL (I)

FIG.190B

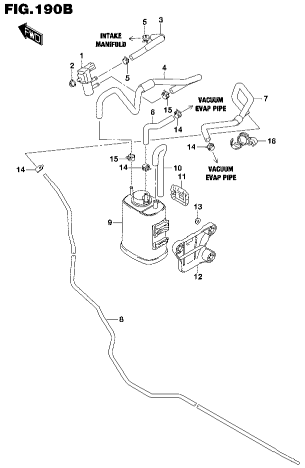

APK414-3 P22 190B
EMISSION CONTROL (2)

FIG.190C

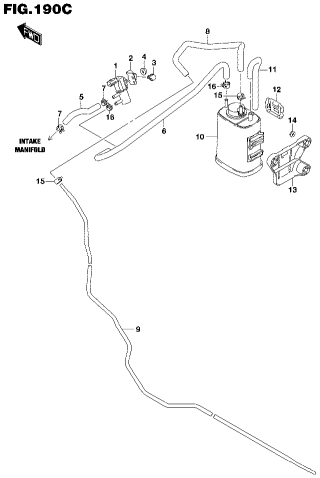

APK414-3 P22 190C
EMISSION CONTROL (3)

FIG.190D

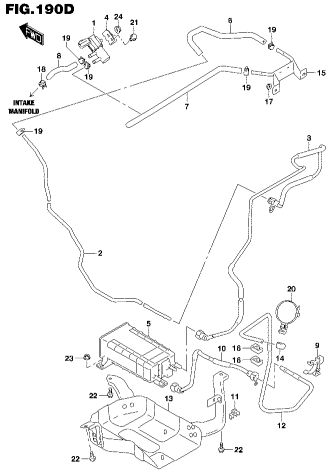

APK414-3 P22 190D
EMISSION CONTROL (4)

FIG.190E

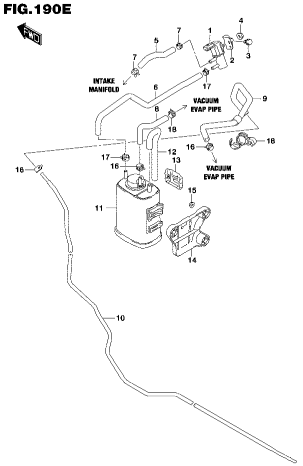

APK414-3 P22 190E
EMISSION CONTROL (5)

FIG.190F

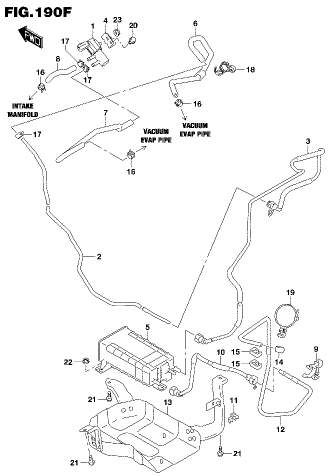

APK414-3 P22 190F
EMISSION CONTROL (6)

FIG.190G

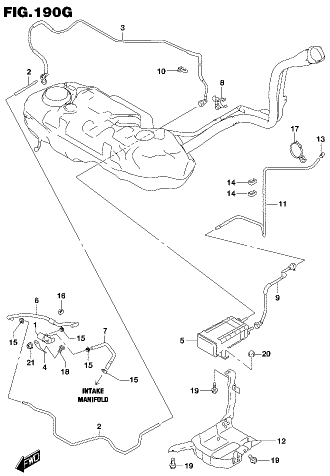

APK414-3 P22 190G
EMISSION CONTROL (7)

FIG.192A

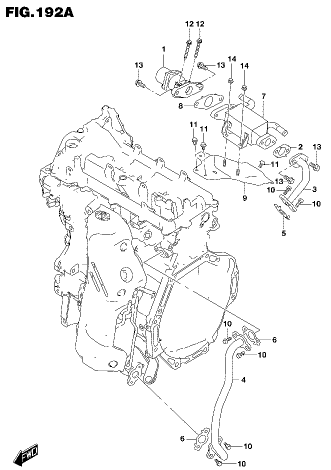

APK414-3 P22 192A
EGR VALVE

FIG.194A

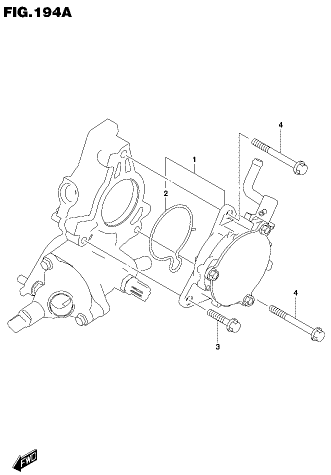

APK414-3 P22 194A
VACUUM PUMP

FIG.199A

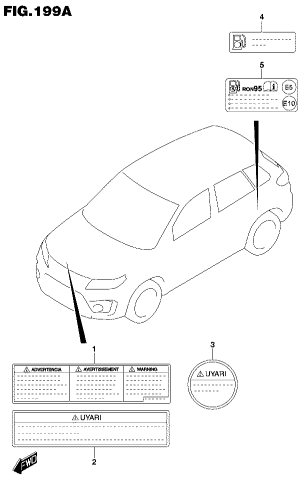

APK414-3 P22 199A
LABEL

FIG.200A

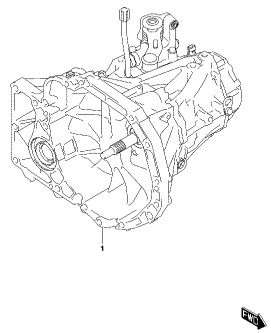

APK414-3 P22 200A
MT TRANSMISSION ASSY (1)

FIG.200B

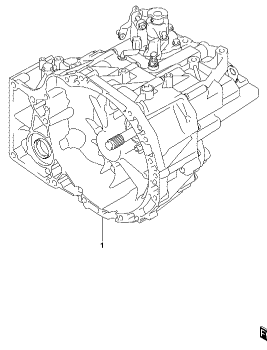

APK414-3 P22 200B
MT TRANSMISSION ASSY (2)

FIG.202A

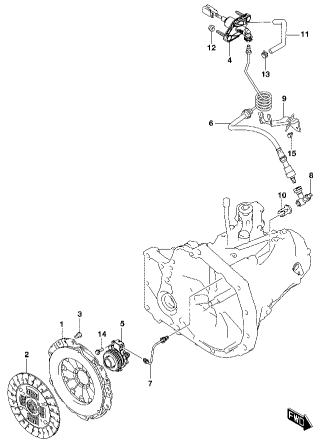

APK414-3 P22 202A
MT CLUTCH (1)

FIG.202B

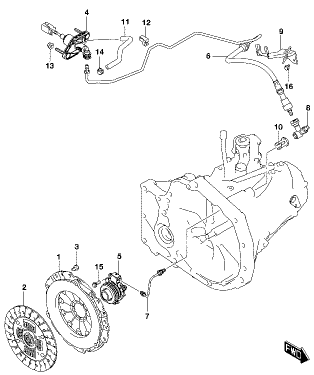

APK414-3 P22 202B
MT CLUTCH (2)

FIG.202C

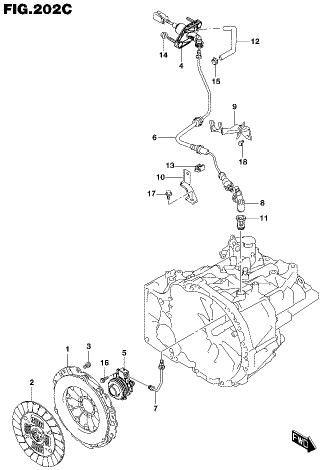

APK414-3 P22 202C
MT CLUTCH (3)

FIG.202D

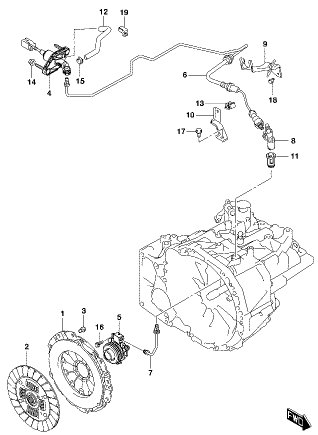

APK414-3 P22 202D
MT CLUTCH (4)

FIG.204A

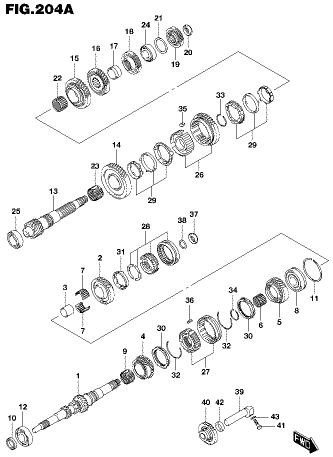

APK414-3 P22 204A
MT TRANSMISSION GEAR (1)

FIG.204B

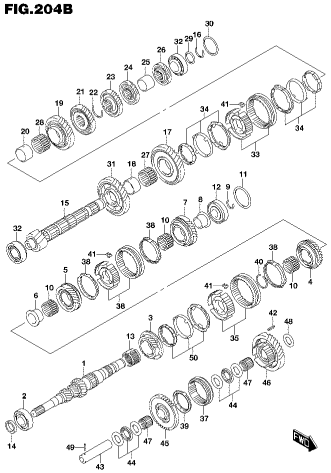

APK414-3 P22 204B
MT TRANSMISSION GEAR (2)

FIG.206A

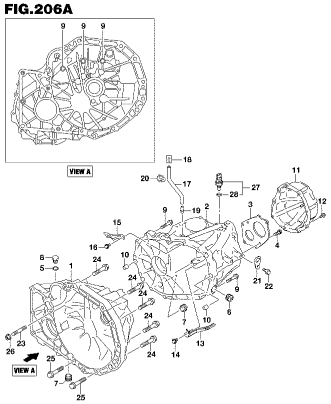

APK414-3 P22 206A
MT TRANSMISSION CASE (1)

FIG.206B

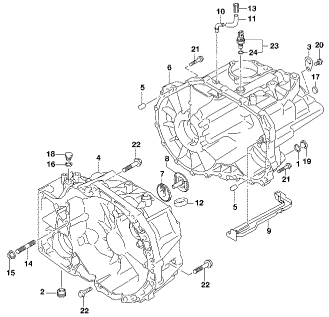

APK414-3 P22 206B
MT TRANSMISSION CASE (2)

FIG.208A

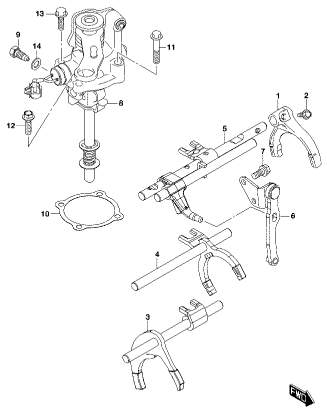

APK414-3 P22 208A
MT GEAR SHIFT FORK (1)

FIG.208B

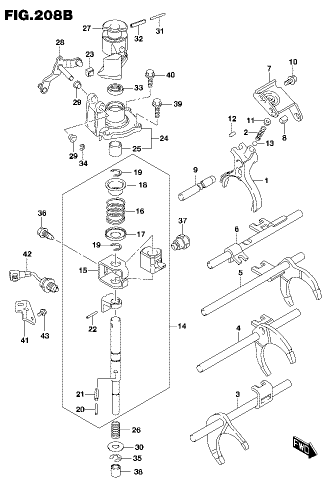

APK414-3 P22 208B
MT GEAR SHIFT FORK (2)

FIG.210A

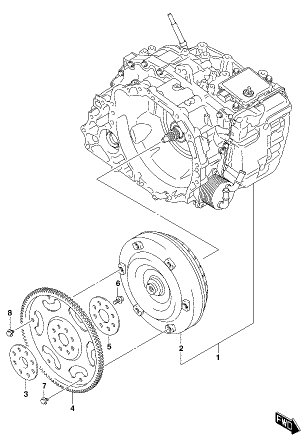

APK414-3 P22 210A
AT TRANSMISSION ASSY (1)

FIG.210B

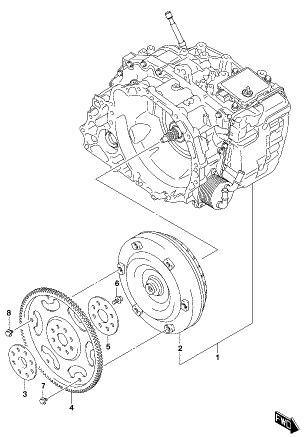

APK414-3 P22 210B
AT TRANSMISSION ASSY (2)

FIG.214A

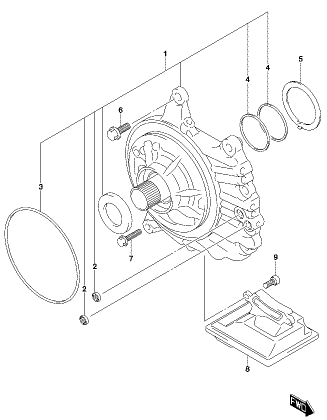

APK414-3 P22 214A
AT OIL PUMP

FIG.216A

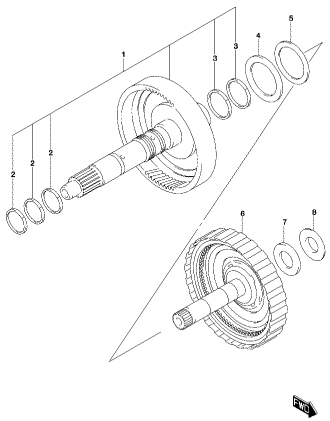

APK414-3 P22 216A
AT INPUT SHAFT

FIG.220A

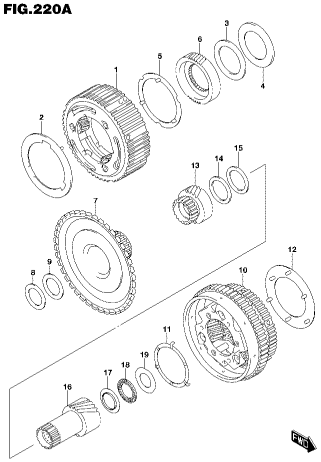

APK414-3 P22 220A
AT PLANETARY GEAR (1)

FIG.220B

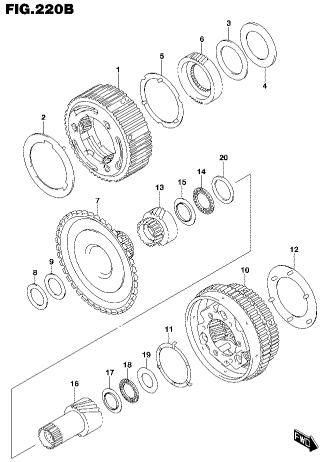

APK414-3 P22 220B
AT PLANETARY GEAR (2)

FIG.226A

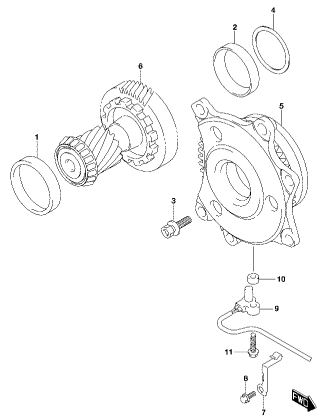

APK414-3 P22 226A
AT REDUCTION GEAR (1)

FIG.226B

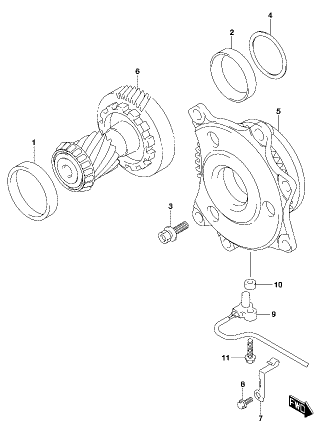

APK414-3 P22 226B
AT REDUCTION GEAR (2)

FIG.228A

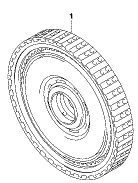

APK414-3 P22 228A
AT FORWARD CLUTCH

FIG.230A

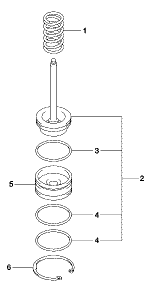

APK414-3 P22 230A
AT 2ND BRAKE

FIG.234A

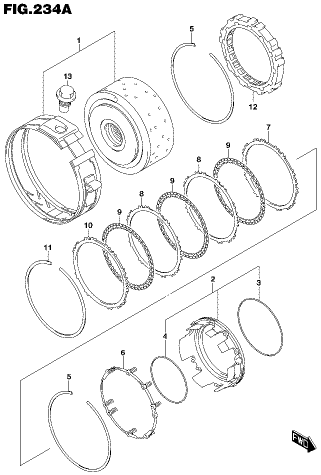

APK414-3 P22 234A
AT 1ST/REVERSE BRAKE (1)

FIG.234B

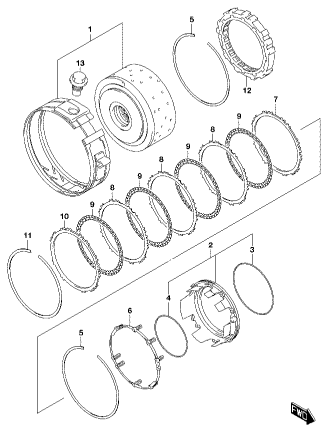

APK414-3 P22 234B
AT 1ST/REVERSE BRAKE (2)

FIG.240A

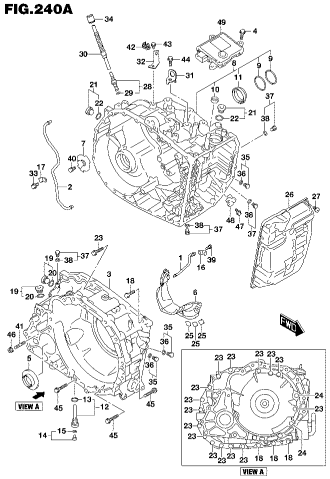

APK414-3 P22 240A
AT TRANSMISSION CASE

FIG.244A

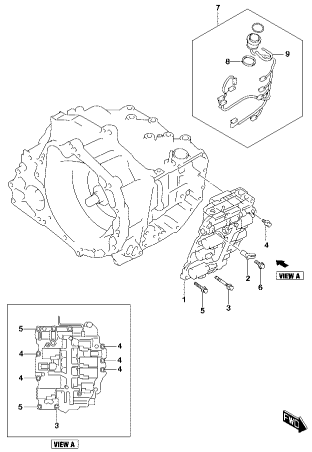

APK414-3 P22 244A
AT VALVE

FIG.246A

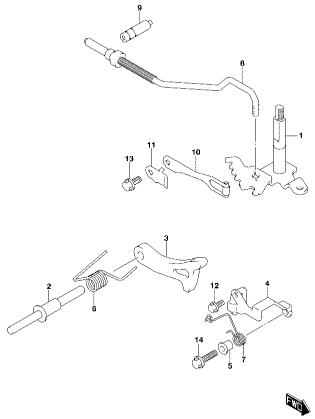

APK414-3 P22 246A
AT PARKING LOCK

FIG.248A

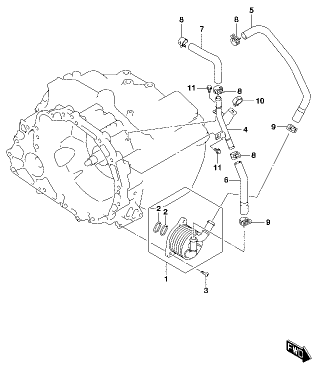

APK414-3 P22 248A
AT OIL HOSE (1)

FIG.248B

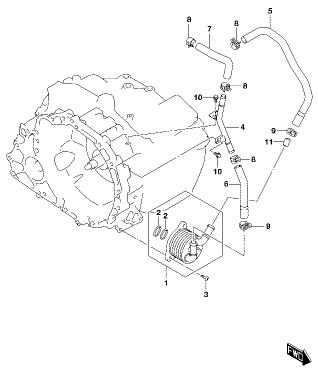

APK414-3 P22 248B
AT OIL HOSE (2)

FIG.260A

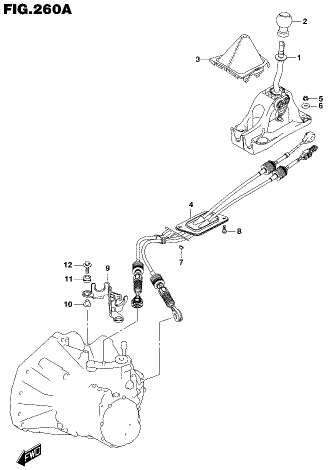

APK414-3 P22 260A
GEAR SHIFT CONTROL (1)

FIG.260B

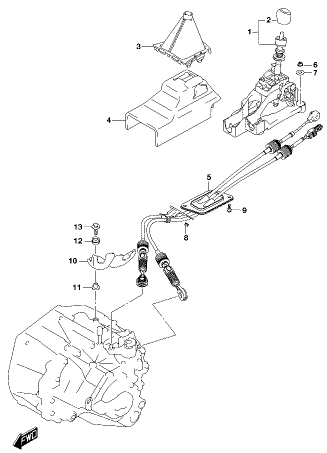

APK414-3 P22 260B
GEAR SHIFT CONTROL (2)

FIG.260C

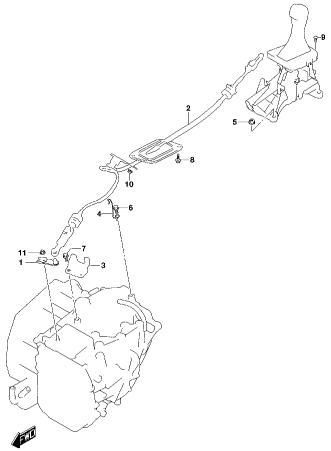

APK414-3 P22 260C
GEAR SHIFT CONTROL (3)

FIG.264A

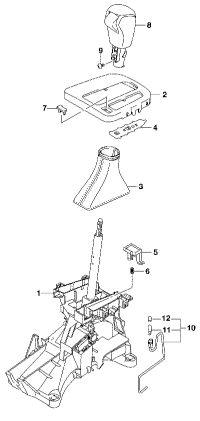

APK414-3 P22 264A
SELECT LEVER (1)

FIG.264B

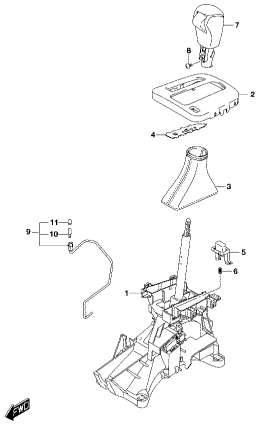

APK414-3 P22 264B
SELECT LEVER (2)

FIG.267A

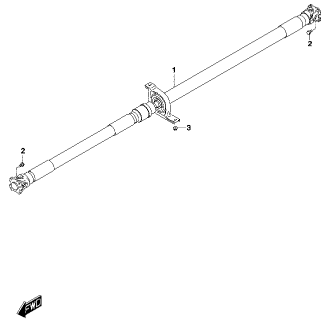

APK414-3 P22 267A
PROPELLER SHAFT

FIG.272A

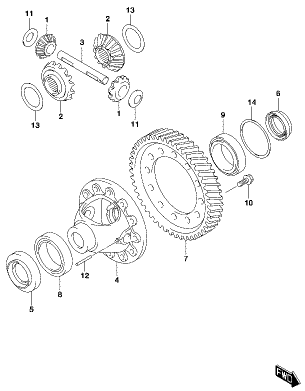

APK414-3 P22 272A
FRONT DIFFERENTIAL GEAR (1)

FIG.272B

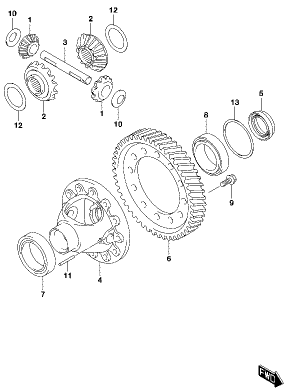

APK414-3 P22 272B
FRONT DIFFERENTIAL GEAR (2)

FIG.272C

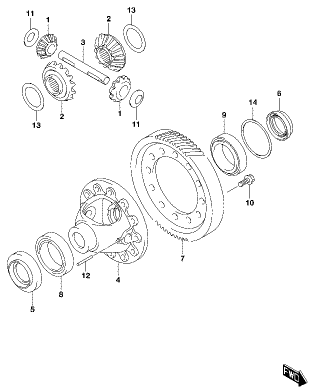

APK414-3 P22 272C
FRONT DIFFERENTIAL GEAR (3)

FIG.272D

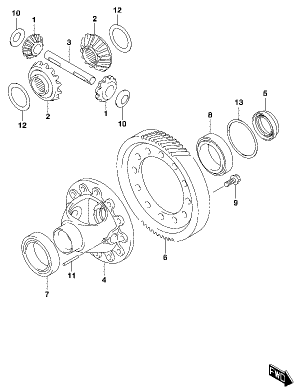

APK414-3 P22 272D
FRONT DIFFERENTIAL GEAR (4)

FIG.272E

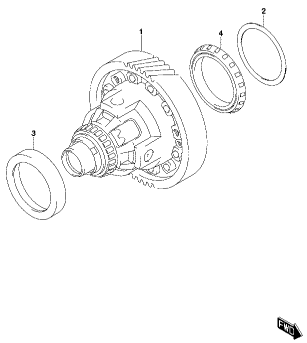

APK414-3 P22 272E
FRONT DIFFERENTIAL GEAR (5)

FIG.272F

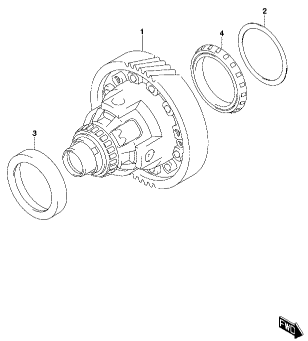

APK414-3 P22 272F
FRONT DIFFERENTIAL GEAR (6)

FIG.282A

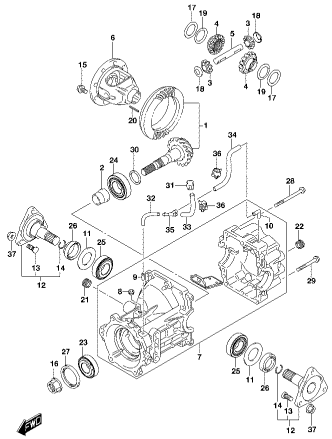

APK414-3 P22 282A
REAR DIFFERENTIAL GEAR (1)

FIG.282B

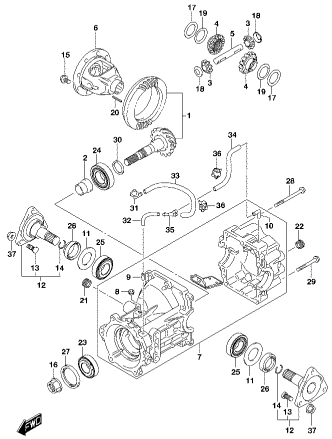

APK414-3 P22 282B
REAR DIFFERENTIAL GEAR (2)

FIG.286A

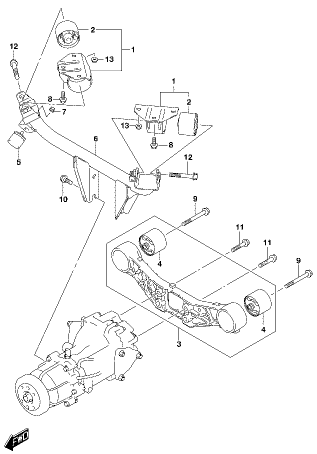

APK414-3 P22 286A
REAR DIFFERENTIAL MOUNTING

FIG.288A

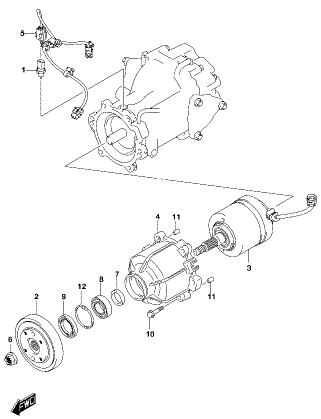

APK414-3 P22 288A
REAR DIFFERENTIAL TORQUE CONTROL (1)

FIG.288B

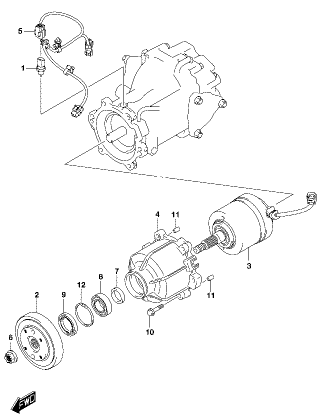

APK414-3 P22 288B
REAR DIFFERENTIAL TORQUE CONTROL (2)

FIG.290A

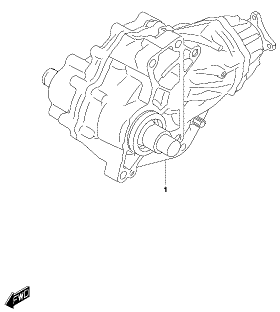

APK414-3 P22 290A
TRANSFER ASSY

FIG.291A

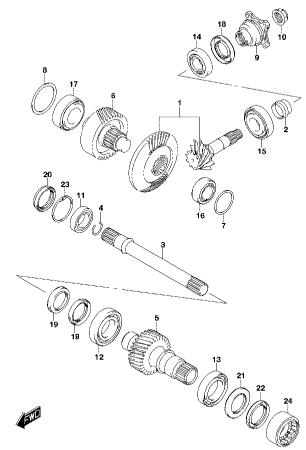

APK414-3 P22 291A
TRANSFER GEAR

FIG.298A

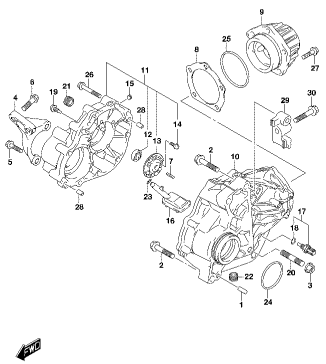

APK414-3 P22 298A
TRANSFER CASE

FIG.300A

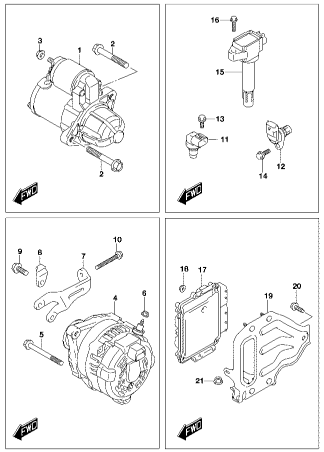

APK414-3 P22 300A
ENGINE ELECTRICAL (1)

FIG.300B

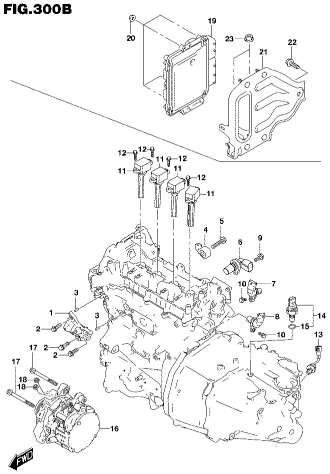

APK414-3 P22 300B
ENGINE ELECTRICAL (2)

FIG.302A

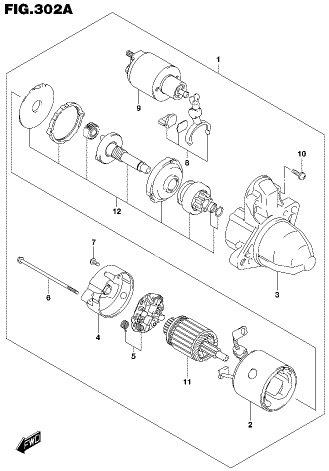

APK414-3 P22 302A
STARTING MOTOR (1)

FIG.302B

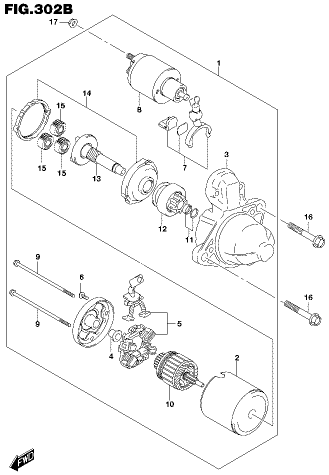

APK414-3 P22 302B
STARTING MOTOR (2)

FIG.304A

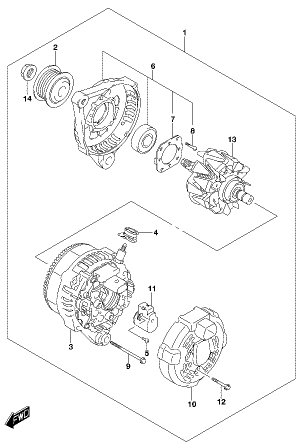

APK414-3 P22 304A
GENERATOR

FIG.318A

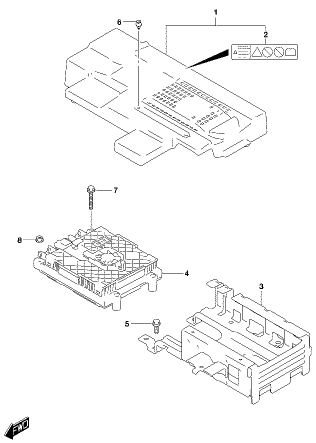

APK414-3 P22 318A
ISG CONVERTER

FIG.320A

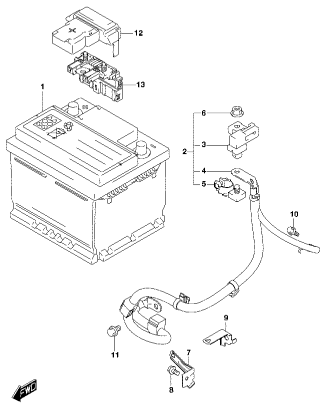

APK414-3 P22 320A
BATTERY (1)

FIG.320B

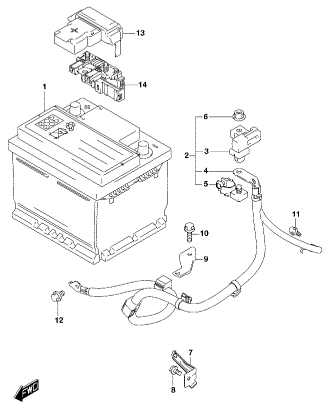

APK414-3 P22 320B
BATTERY (2)

FIG.320C

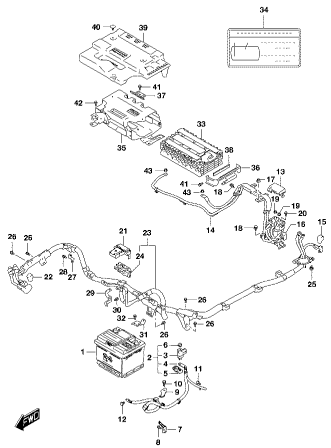

APK414-3 P22 320C
BATTERY (3)

FIG.320D

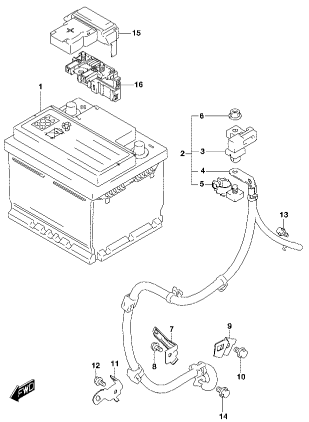

APK414-3 P22 320D
BATTERY (4)

FIG.324A

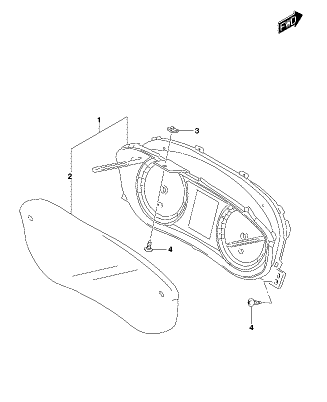

APK414-3 P22 324A
SPEEDOMETER (1)

FIG.324B

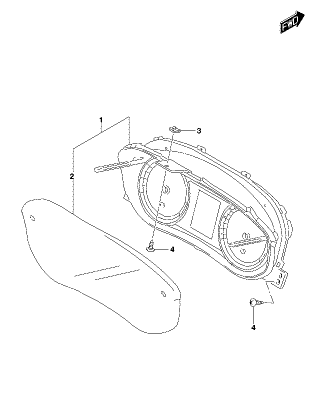

APK414-3 P22 324B
SPEEDOMETER (2)

FIG.324C

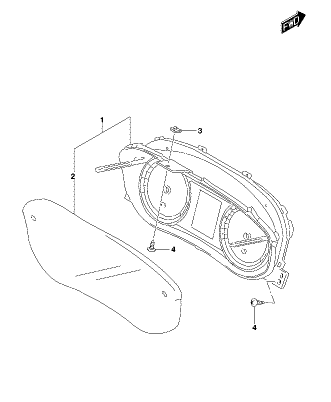

APK414-3 P22 324C
SPEEDOMETER (3)

FIG.324D

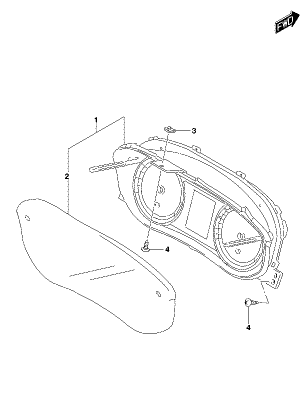

APK414-3 P22 324D
SPEEDOMETER (4)

FIG.324E

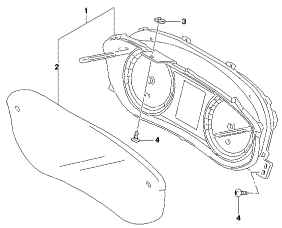

APK414-3 P22 324E
SPEEDOMETER (5)

FIG.324F

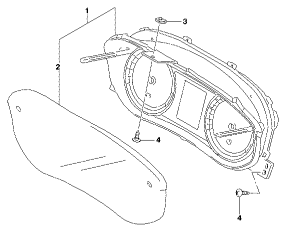

APK414-3 P22 324F
SPEEDOMETER (6)

FIG.330A

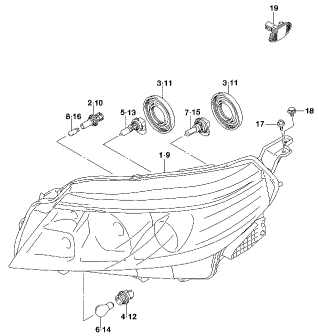

APK414-3 P22 330A
HEADLAMP (1)

FIG.330B

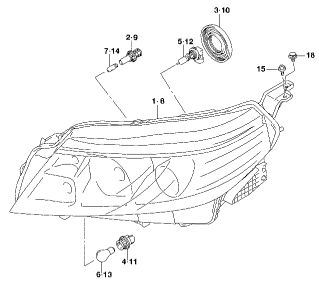

APK414-3 P22 330B
HEADLAMP (2)

FIG.330C

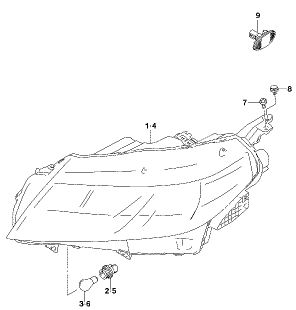

APK414-3 P22 330C
HEADLAMP (3)

FIG.332A

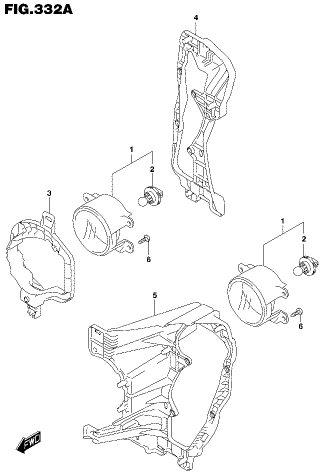

APK414-3 P22 332A
FRONT FOG LAMP (1)

FIG.332B

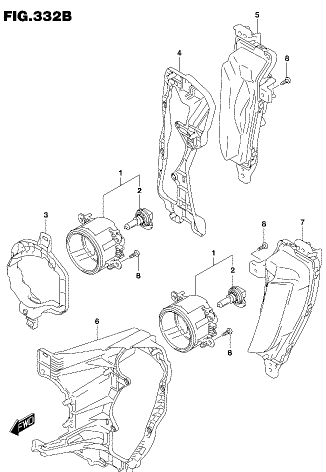

APK414-3 P22 332B
FRONT FOG LAMP (2)

FIG.336A

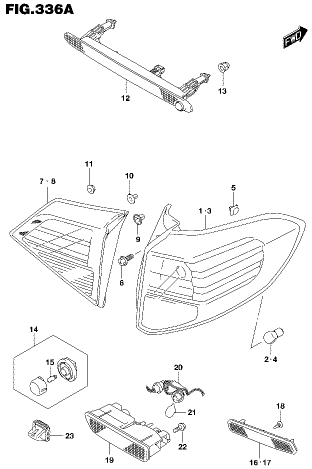

APK414-3 P22 336A
REAR LAMP

FIG.338A

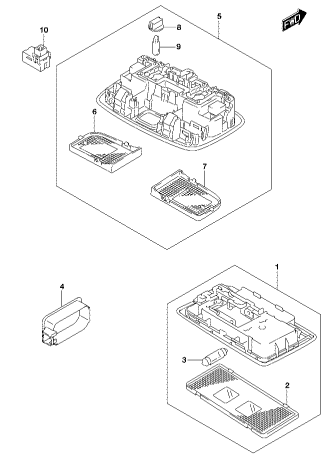

APK414-3 P22 338A
ROOM LAMP (1)

FIG.338B

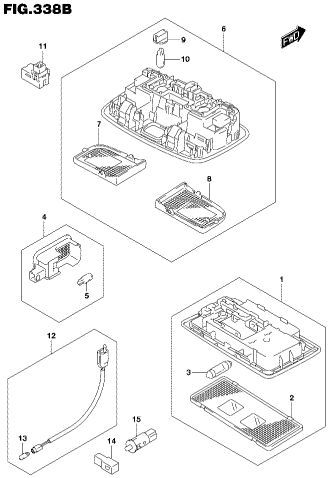

APK414-3 P22 338B
ROOM LAMP (2)

FIG.338C

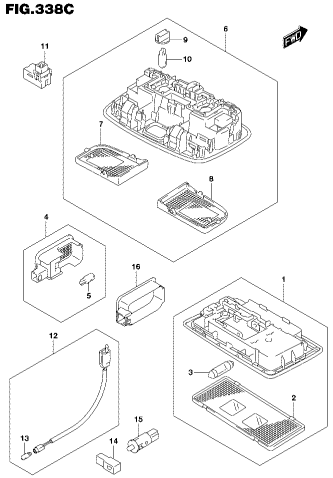

APK414-3 P22 338C
ROOM LAMP (3)

FIG.338D

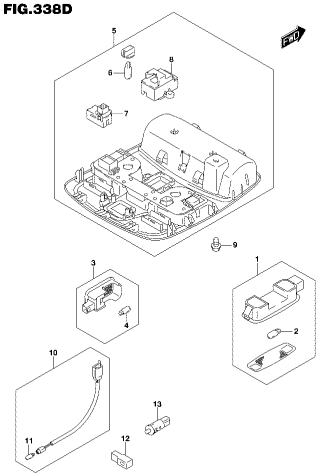

APK414-3 P22 338D
ROOM LAMP (4)

FIG.348A

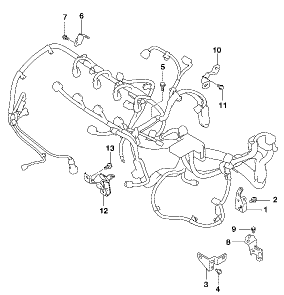

APK414-3 P22 348A
ENGINE HARNESS BRACKET (1)

FIG.348B

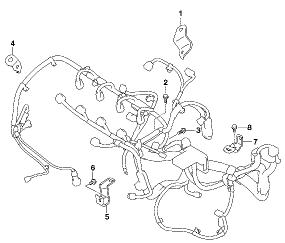

APK414-3 P22 348B
ENGINE HARNESS BRACKET (2)

FIG.348C

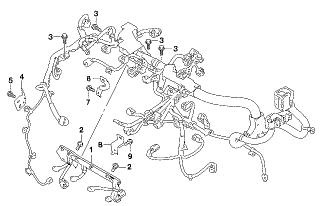

APK414-3 P22 348C
ENGINE HARNESS BRACKET (3)

FIG.348D

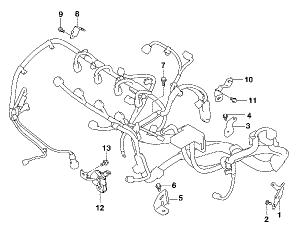

APK414-3 P22 348D
ENGINE HARNESS BRACKET (4)

FIG.348E

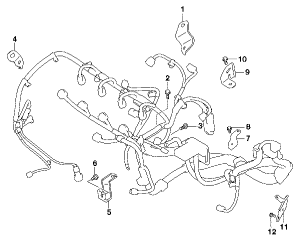

APK414-3 P22 348E
ENGINE HARNESS BRACKET (5)

FIG.34NA

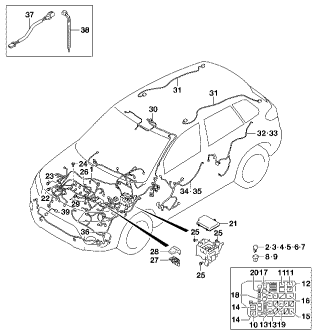

APK414-3 P22 34NA
WIRING HARNESS FRONT SIDE (1)

FIG.34NB

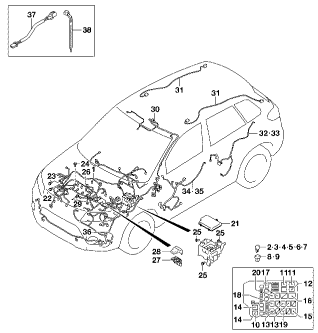

APK414-3 P22 34NB
WIRING HARNESS FRONT SIDE (2)

FIG.34NC

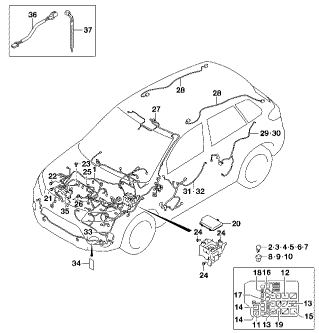

APK414-3 P22 34NC
WIRING HARNESS FRONT SIDE (3)

FIG.34ND

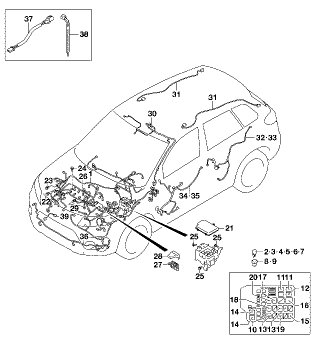

APK414-3 P22 34ND
WIRING HARNESS FRONT SIDE (4)

FIG.34NE

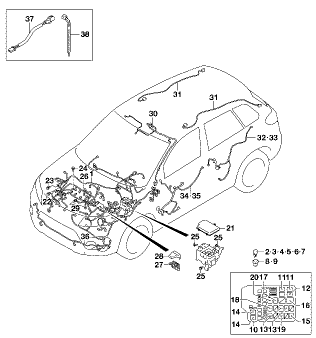

APK414-3 P22 34NE
WIRING HARNESS FRONT SIDE (5)

FIG.34NF

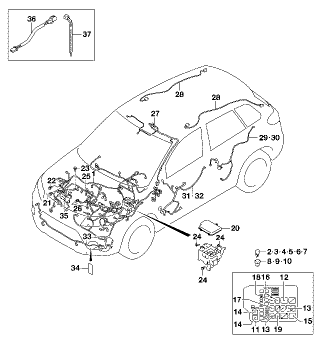

APK414-3 P22 34NF
WIRING HARNESS FRONT SIDE (6)

FIG.34NG

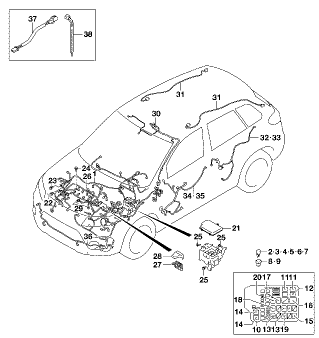

APK414-3 P22 34NG
WIRING HARNESS FRONT SIDE (7)

FIG.34NH

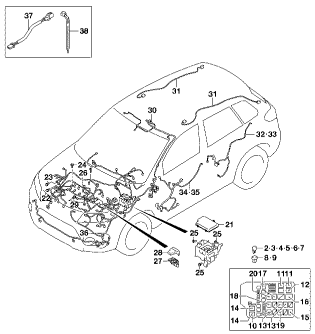

APK414-3 P22 34NH
WIRING HARNESS FRONT SIDE (8)

FIG.34PA

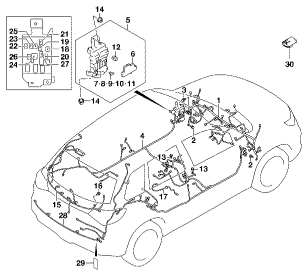

APK414-3 P22 34PA
WIRING HARNESS REAR SIDE (1)

FIG.34PB

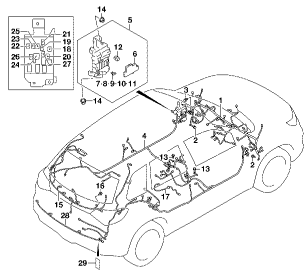

APK414-3 P22 34PB
WIRING HARNESS REAR SIDE (2)

FIG.34PC

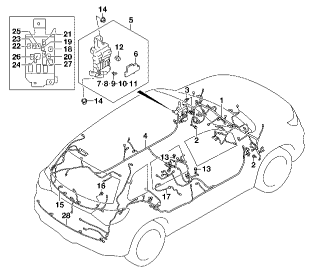

APK414-3 P22 34PC
WIRING HARNESS REAR SIDE (3)

FIG.34PD

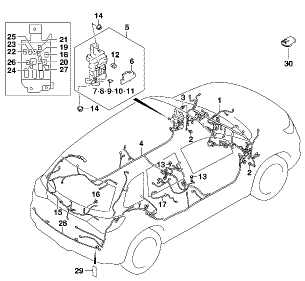

APK414-3 P22 34PD
WIRING HARNESS REAR SIDE (4)

FIG.34PE

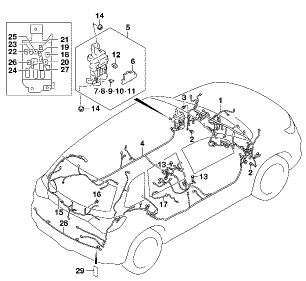

APK414-3 P22 34PE
WIRING HARNESS REAR SIDE (5)

FIG.34PF

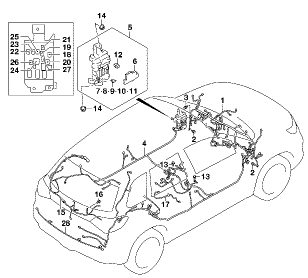

APK414-3 P22 34PF
WIRING HARNESS REAR SIDE (6)

FIG.34PG

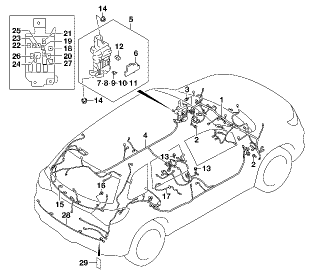

APK414-3 P22 34PG
WIRING HARNESS REAR SIDE (7)

FIG.34PH

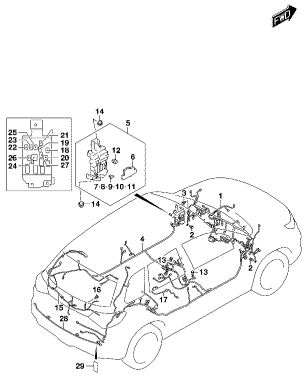

APK414-3 P22 34PH
WIRING HARNESS REAR SIDE (8)

FIG.350A

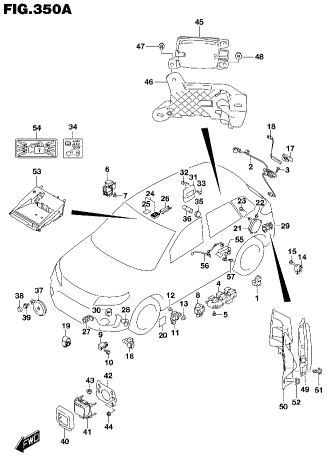

APK414-3 P22 350A
ELECTRICAL CONTROL BODY (1)

FIG.350B

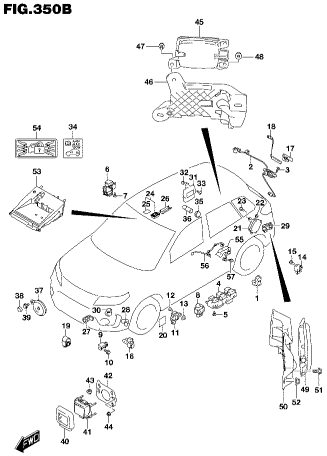

APK414-3 P22 350B
ELECTRICAL CONTROL BODY (2)

FIG.350C

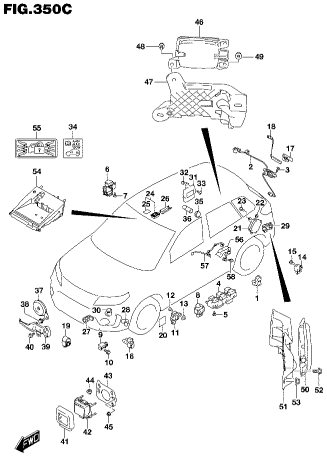

APK414-3 P22 350C
ELECTRICAL CONTROL BODY (3)

FIG.350D

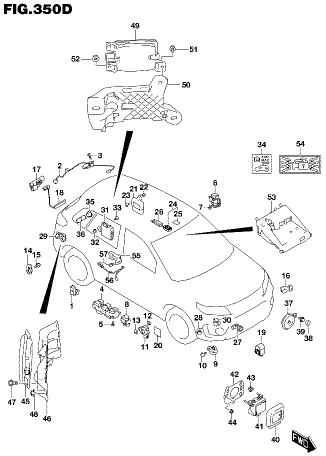

APK414-3 P22 350D
ELECTRICAL CONTROL BODY (4)

FIG.350E

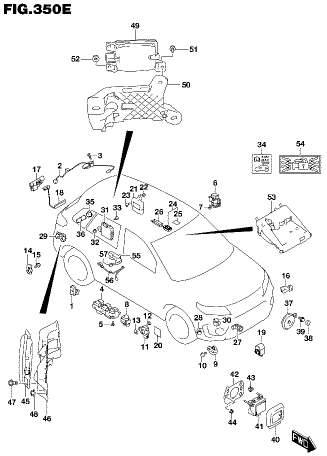

APK414-3 P22 350E
ELECTRICAL CONTROL BODY (5)

FIG.350F

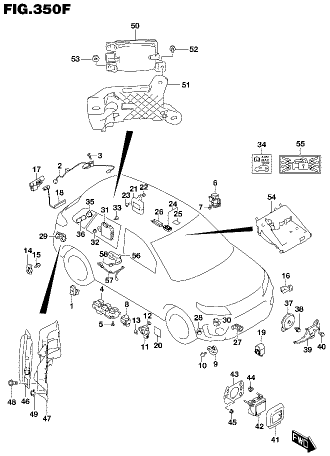

APK414-3 P22 350F
ELECTRICAL CONTROL BODY (6)

FIG.350G

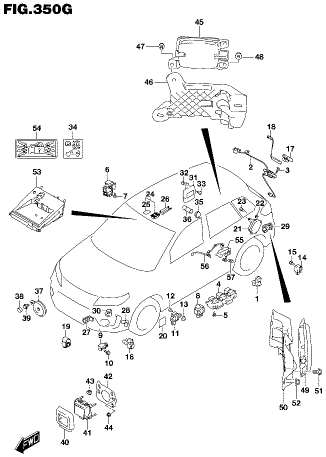

APK414-3 P22 350G
ELECTRICAL CONTROL BODY (7)

FIG.350H

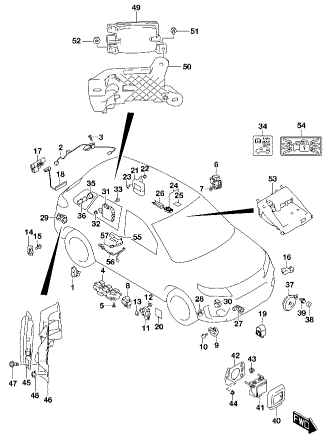

APK414-3 P22 350H
ELECTRICAL CONTROL BODY (3)

FIG.351A

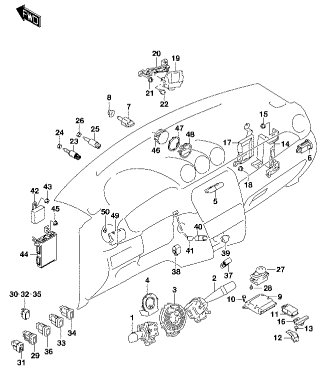

APK414-3 P22 351A
ELECTRICAL CONTROL VP (1)

FIG.351B

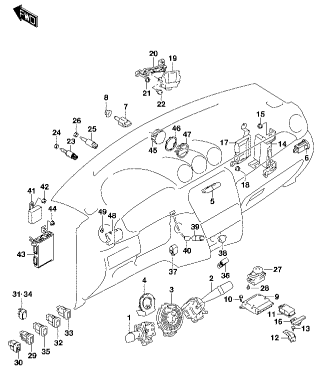

APK414-3 P22 351B
ELECTRICAL CONTROL VP (2)

FIG.351C

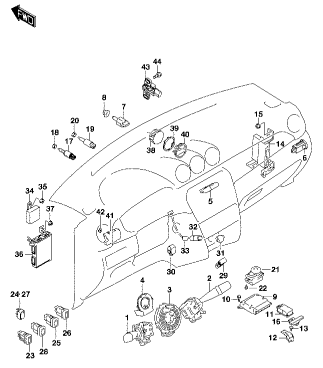

APK414-3 P22 351C
ELECTRICAL CONTROL VP (3)

FIG.351D

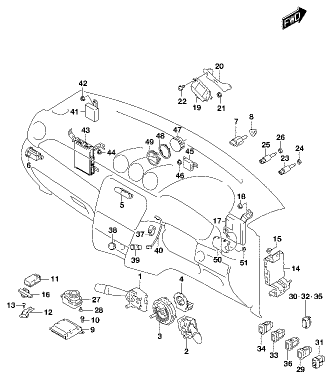

APK414-3 P22 351D
ELECTRICAL CONTROL VP (4)

FIG.351E

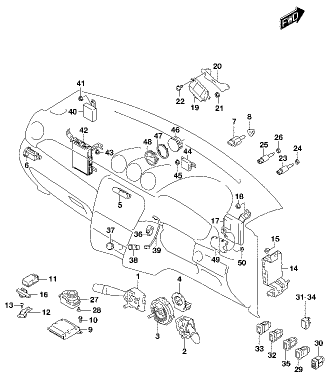

APK414-3 P22 351E
ELECTRICAL CONTROL VP (5)

FIG.351F

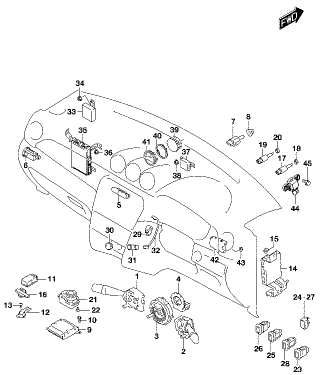

APK414-3 P22 351F
ELECTRICAL CONTROL VP (6)

FIG.351G

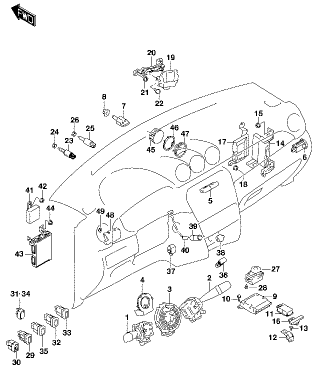

APK414-3 P22 351G
ELECTRICAL CONTROL VP (7)

FIG.351H

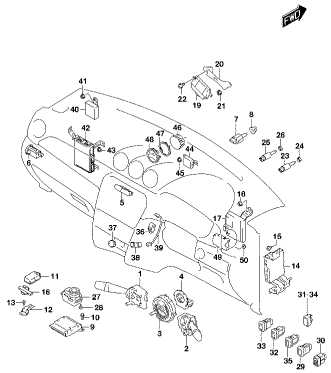

APK414-3 P22 351H
ELECTRICAL CONTROL VP (8)

FIG.360A

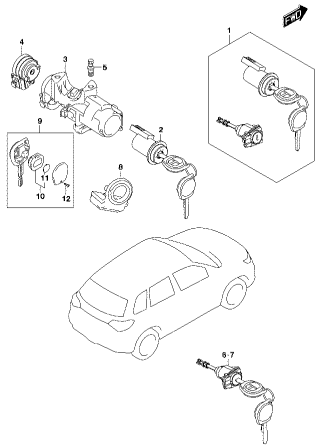

APK414-3 P22 360A
LOCK SET (1)

FIG.360B

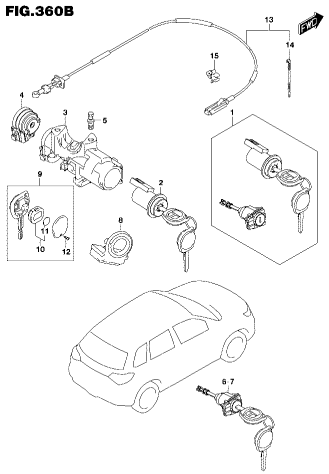

APK414-3 P22 360B
LOCK SET (2)

FIG.360C

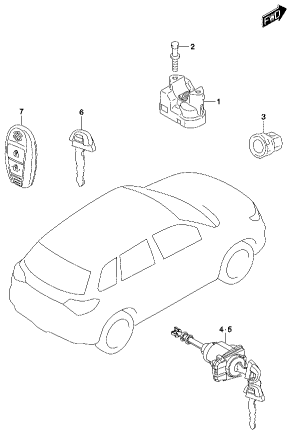

APK414-3 P22 360C
LOCK SET (3)

FIG.370A

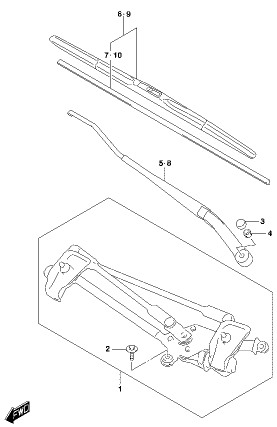

APK414-3 P22 370A
FRONT WINDOW WIPER (1)

FIG.370B

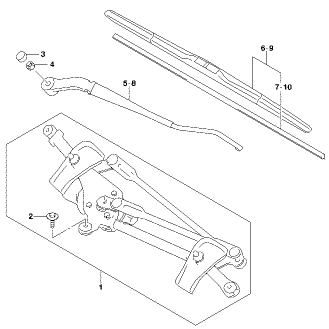

APK414-3 P22 370B
FRONT WINDOW WIPER (2)

FIG.374A

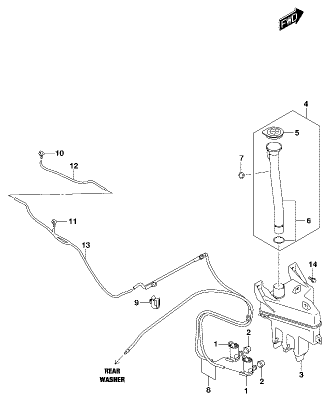

APK414-3 P22 374A
WINDOW WASHER (1)

FIG.374B

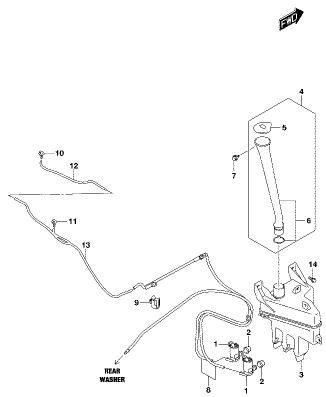

APK414-3 P22 374B
WINDOW WASHER (2)

FIG.376A

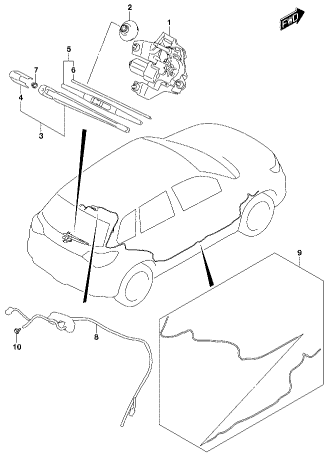

APK414-3 P22 376A
REAR WINDOW WIPER

FIG.392A

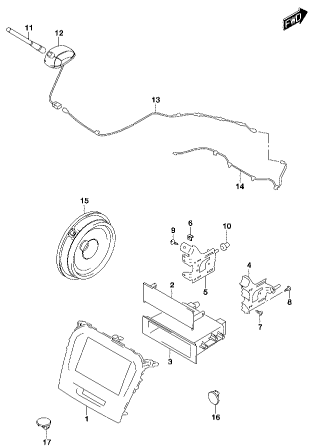

APK414-3 P22 392A
AUDIO (1)

FIG.392B

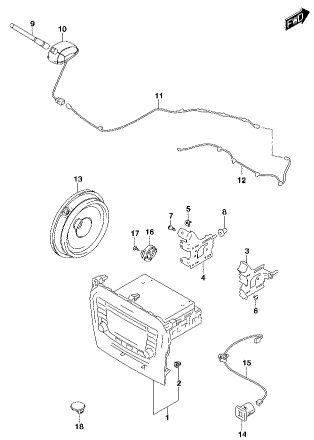

APK414-3 P22 392B
AUDIO (2)

FIG.392C

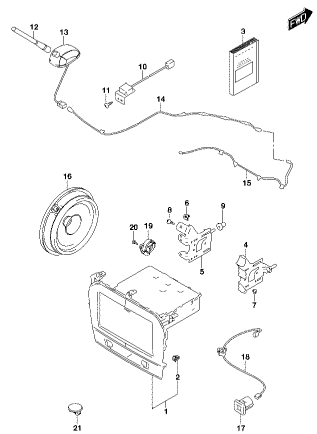

APK414-3 P22 392C
AUDIO (3)

FIG.400A

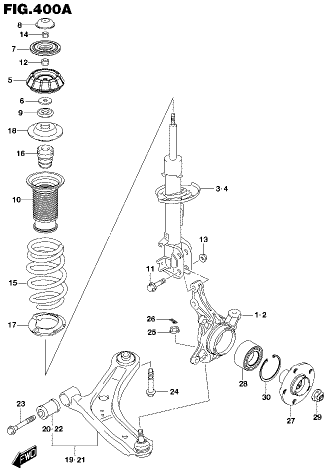

APK414-3 P22 400A
FRONT SUSPENSION

FIG.408A

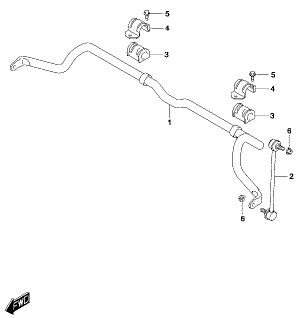

APK414-3 P22 408A
FRONT STABILIZER (1)

FIG.408B

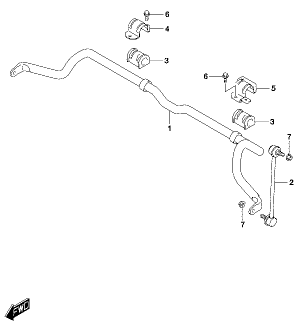

APK414-3 P22 408B
FRONT STABILIZER (2)

FIG.410A

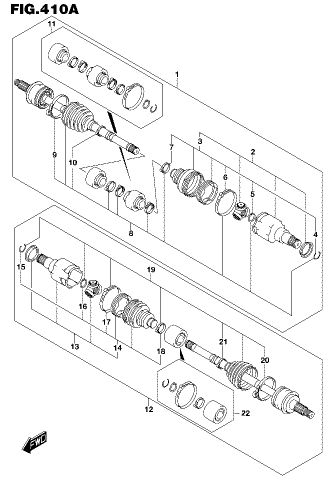

APK414-3 P22 410A
FRONT DRIVE SHAFT (1)

FIG.410B

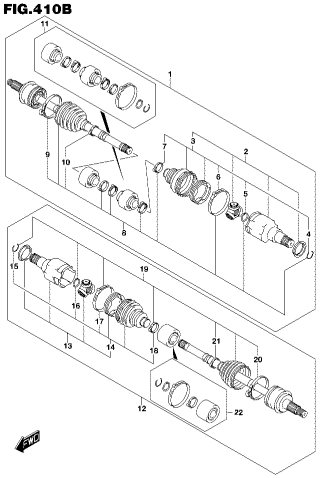

APK414-3 P22 410B
FRONT DRIVE SHAFT (2)

FIG.410C

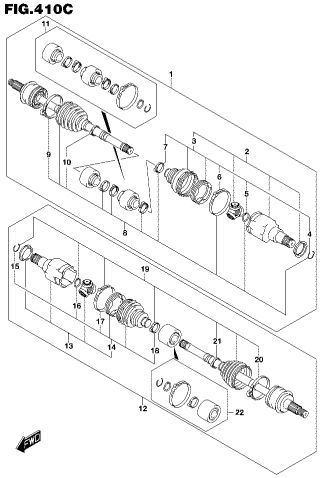

APK414-3 P22 410C
FRONT DRIVE SHAFT (3)

FIG.410D

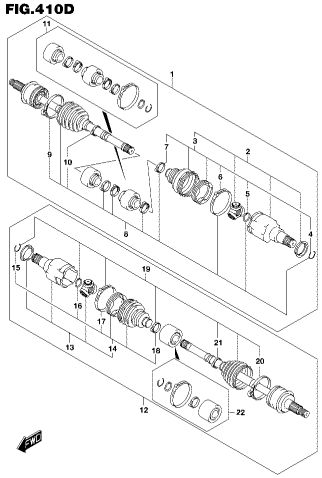

APK414-3 P22 410D
FRONT DRIVE SHAFT (4)

FIG.410E

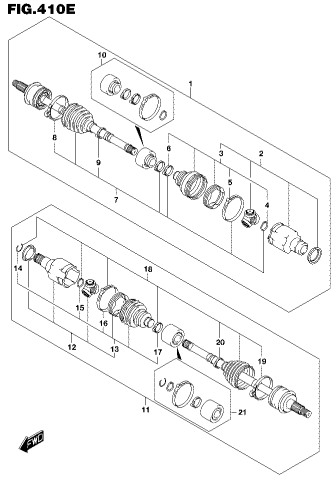

APK414-3 P22 410E
FRONT DRIVE SHAFT (5)

FIG.410F

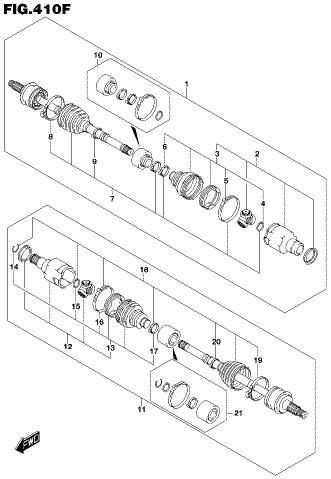

APK414-3 P22 410F
FRONT DRIVE SHAFT (6)

FIG.410G

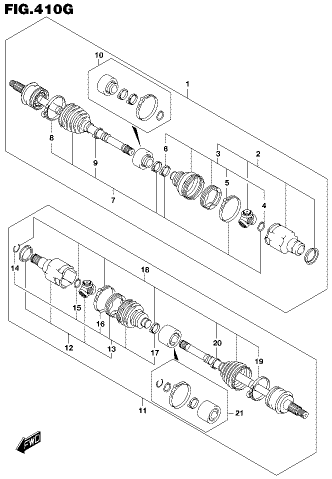

APK414-3 P22 410G
FRONT DRIVE SHAFT (7)

FIG.418A

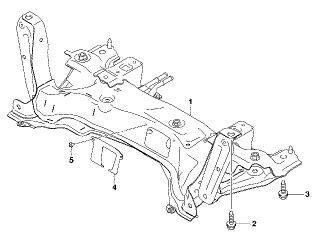

APK414-3 P22 418A
FRONT SUSPENSION FRAME

FIG.430A

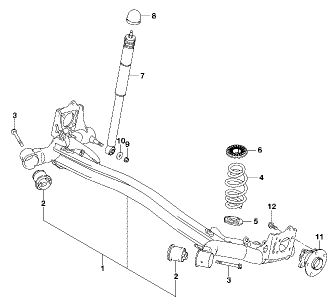

APK414-3 P22 430A
REAR SUSPENSION (1)

FIG.430B

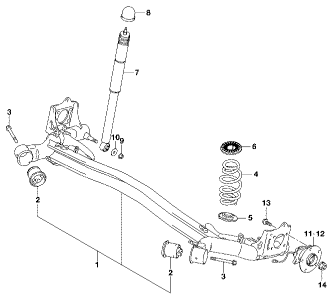

APK414-3 P22 430B
REAR SUSPENSION (2)

FIG.443A

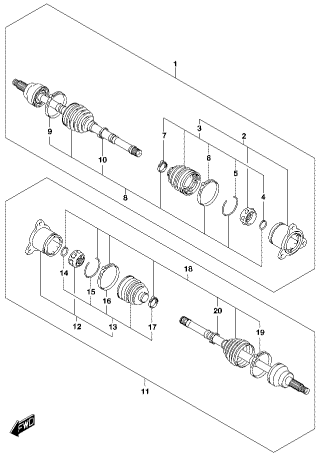

APK414-3 P22 443A
REAR DRIVE SHAFT

FIG.449A

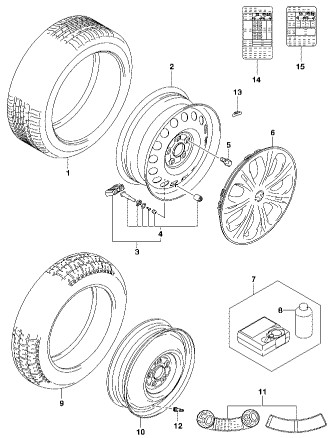

APK414-3 P22 449A
ROAD WHEEL/TIRE (1)

FIG.449B

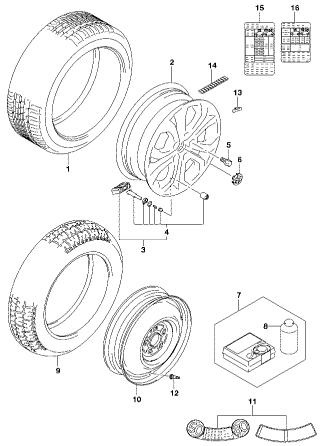

APK414-3 P22 449B
ROAD WHEEL/TIRE (2)

FIG.449C

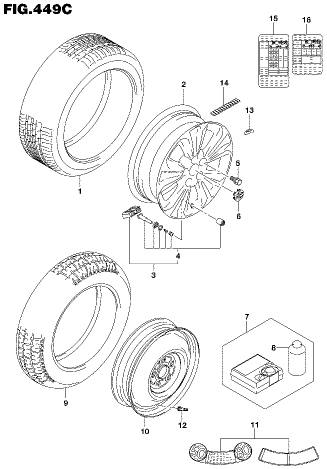

APK414-3 P22 449C
ROAD WHEEL/TIRE (3)

FIG.451A

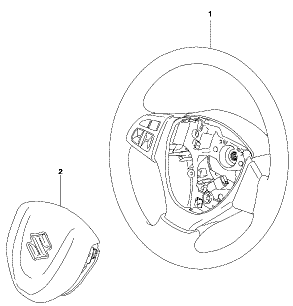

APK414-3 P22 451A
STEERING WHEEL (1)

FIG.451B

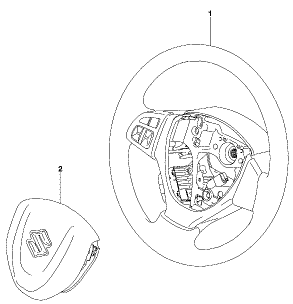

APK414-3 P22 451B
STEERING WHEEL (2)

FIG.451C

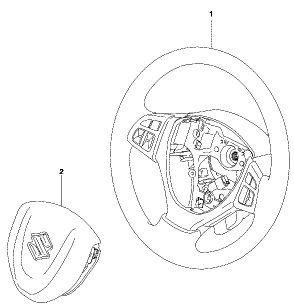

APK414-3 P22 451C
STEERING WHEEL (3)

FIG.451D

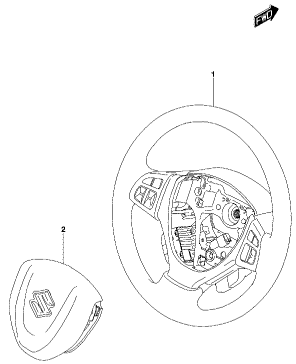

APK414-3 P22 451D
STEERING WHEEL (4)

FIG.451E

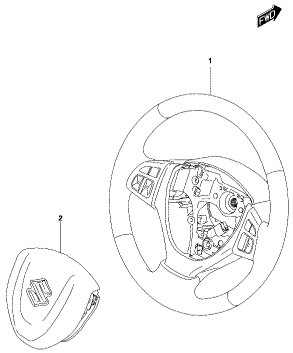

APK414-3 P22 451E
STEERING WHEEL (5)

FIG.451F

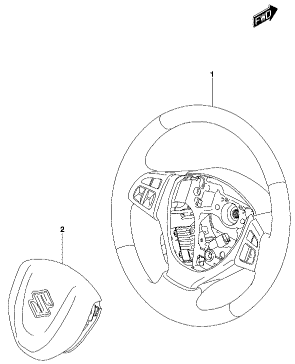

APK414-3 P22 451F
STEERING WHEEL (6)

FIG.451G

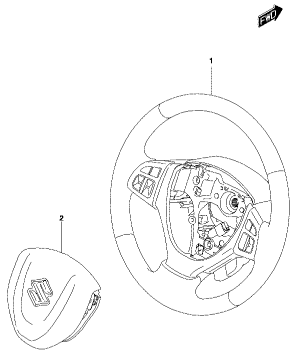

APK414-3 P22 451G
STEERING WHEEL (7)

FIG.451H

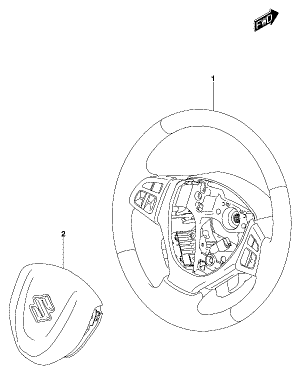

APK414-3 P22 451H
STEERING WHEEL (8)

FIG.451J

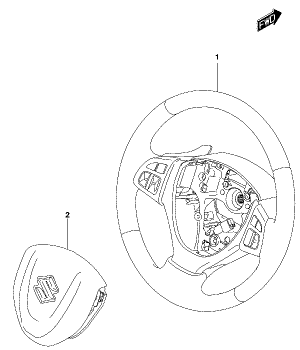

APK414-3 P22 451J
STEERING WHEEL (9)

FIG.451K

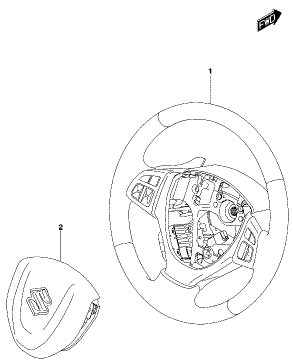

APK414-3 P22 451K
STEERING WHEEL (10)

FIG.451L

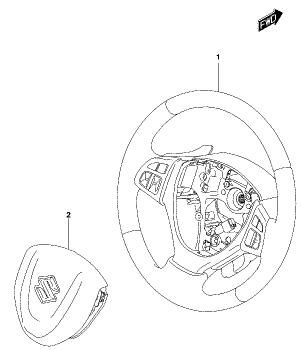

APK414-3 P22 451L
STEERING WHEEL (11)

FIG.451M

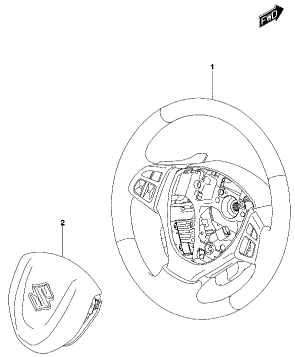

APK414-3 P22 451M
STEERING WHEEL (1/2)

FIG.453A

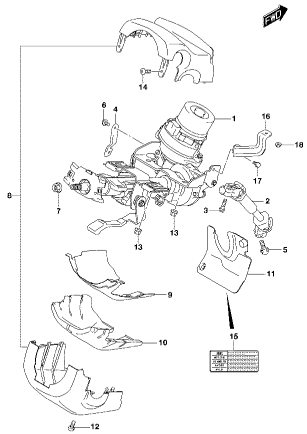

APK414-3 P22 453A
STEERING COLUMN (1)

FIG.453B

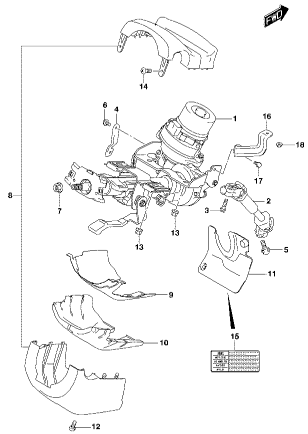

APK414-3 P22 453B
STEERING COLUMN (2)

FIG.453C

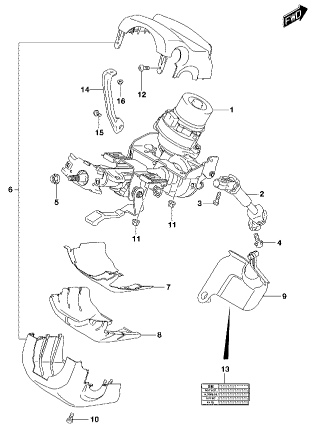

APK414-3 P22 453C
STEERING COLUMN (3)

FIG.453D

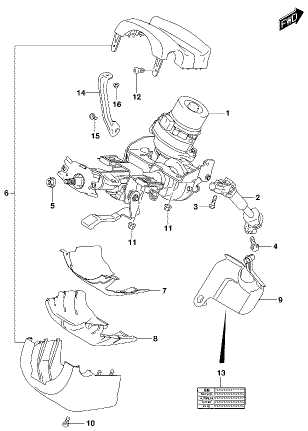

APK414-3 P22 453D
STEERING COLUMN (4)

FIG.480A

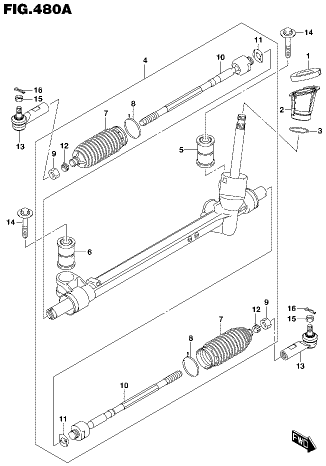

APK414-3 P22 480A
STEERING UNIT (1)

FIG.480B

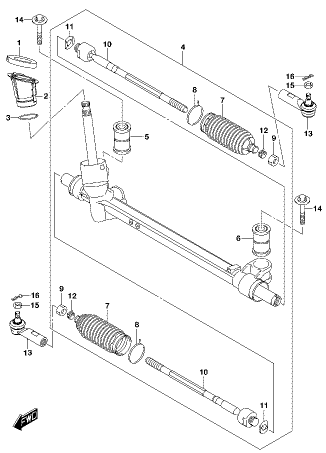

APK414-3 P22 480B
STEERING UNIT (2)

FIG.490A

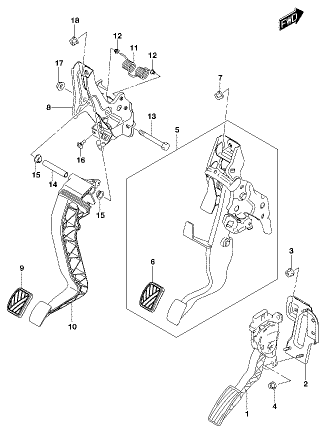

APK414-3 P22 490A
PEDAL/PEDAL BRACKET (1)

FIG.490B

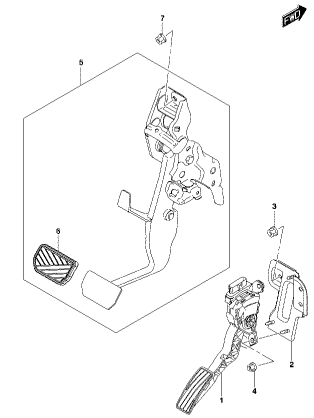

APK414-3 P22 490B
PEDAL/PEDAL BRACKET (2)

FIG.490C

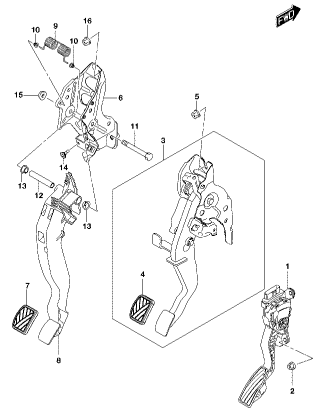

APK414-3 P22 490C
PEDAL/PEDAL BRACKET (3)

FIG.490D

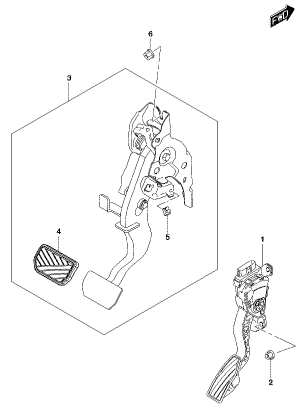

APK414-3 P22 490D
PEDAL/PEDAL BRACKET (4)

FIG.500A

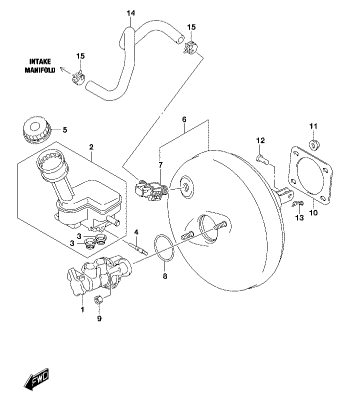

APK414-3 P22 500A
BRAKE MASTER CYLINDER (1)

FIG.500B

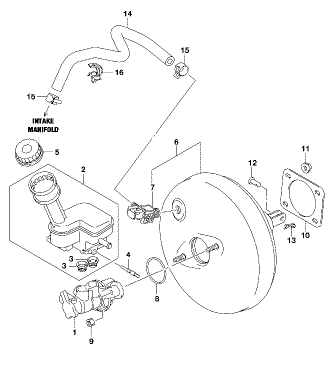

APK414-3 P22 500B
BRAKE MASTER CYLINDER (2)

FIG.500C

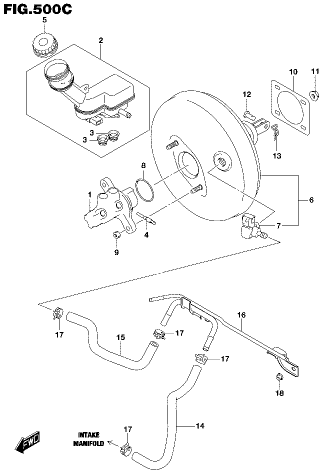

APK414-3 P22 500C
BRAKE MASTER CYLINDER (3)

FIG.500D

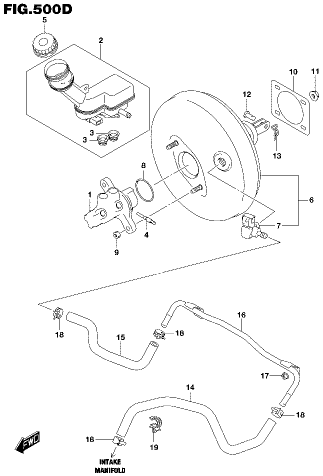

APK414-3 P22 500D
BRAKE MASTER CYLINDER (4)

FIG.503A

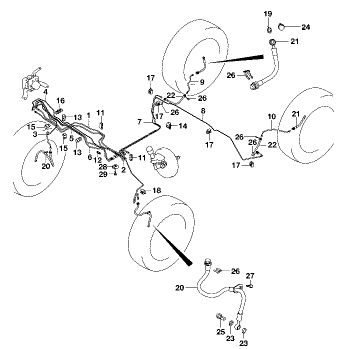

APK414-3 P22 503A
BRAKE PIPING (1)

FIG.503B

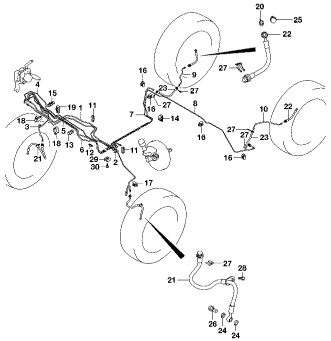

APK414-3 P22 503B
BRAKE PIPING (2)

FIG.503C

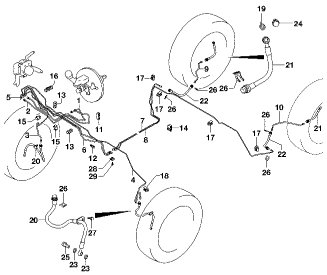

APK414-3 P22 503C
BRAKE PIPING (3)

FIG.503D

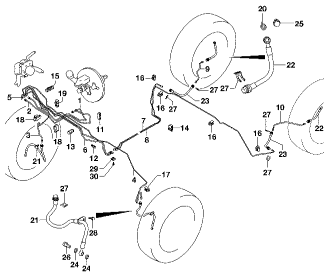

APK414-3 P22 503D
BRAKE PIPING (4)

FIG.510A

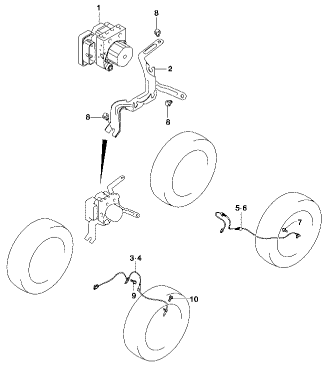

APK414-3 P22 510A
ANTI LOCK BRAKE SYSTEM (1)

FIG.510B

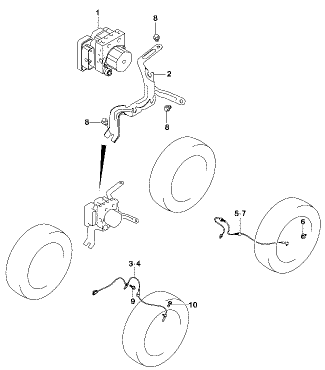

APK414-3 P22 510B
ANTI LOCK BRAKE SYSTEM (2)

FIG.520A

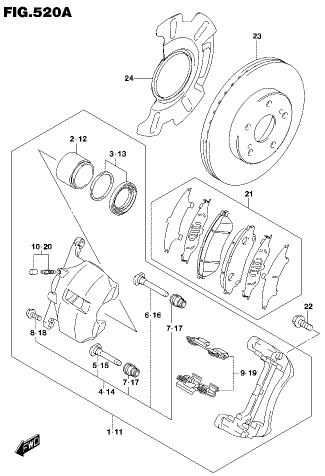

APK414-3 P22 520A
FRONT WHEEL BRAKE

FIG.530A

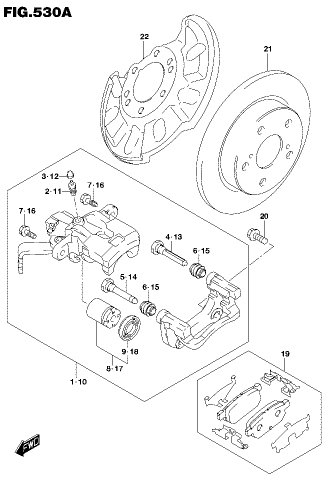

APK414-3 P22 530A
REAR WHEEL BRAKE

FIG.542A

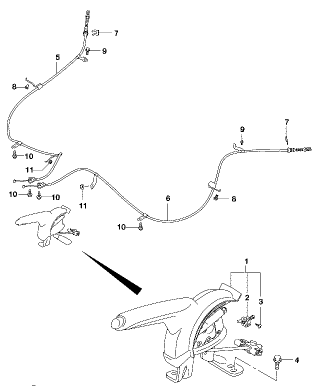

APK414-3 P22 542A
PARKING BRAKE

FIG.570A

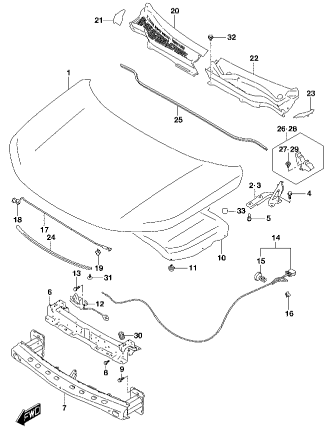

APK414-3 P22 570A
FRONT HOOD PANEL (1)

FIG.570B

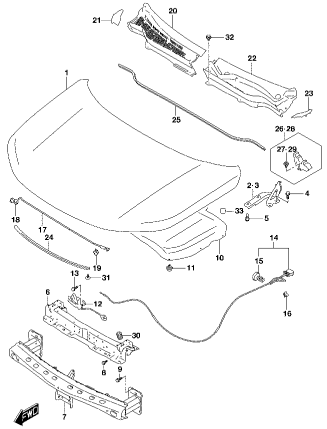

APK414-3 P22 570B
FRONT HOOD PANEL (2)

FIG.570C

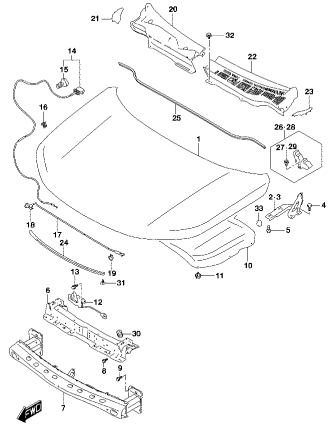

APK414-3 P22 570C
FRONT HOOD PANEL (3)

FIG.570D

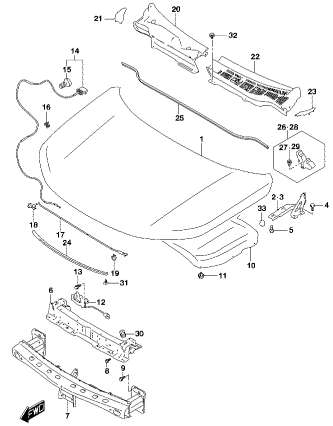

APK414-3 P22 570D
FRONT HOOD PANEL (4)

FIG.580A

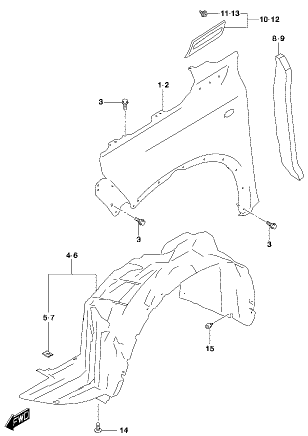

APK414-3 P22 580A
FRONT FENDER PANEL (1)

FIG.580B

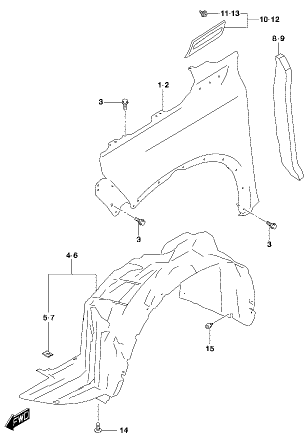

APK414-3 P22 580B
FRONT FENDER PANEL (2)

FIG.590A

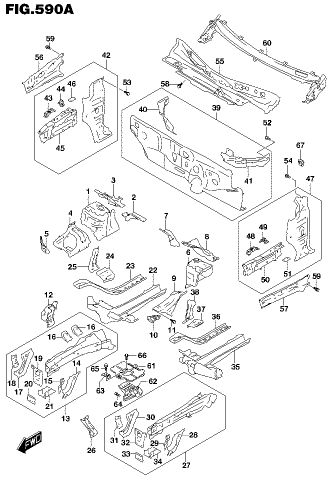

APK414-3 P22 590A
FRONT BODY PANEL (1)

FIG.590B

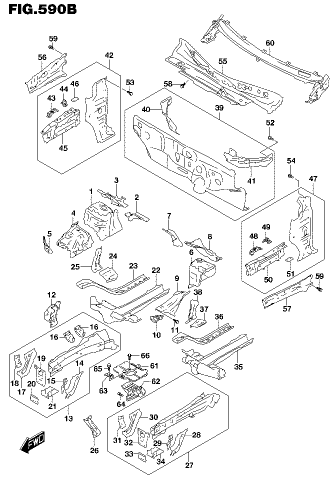

APK414-3 P22 590B
FRONT BODY PANEL (2)

FIG.590C

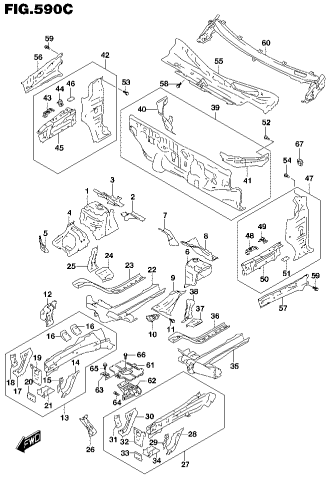

APK414-3 P22 590C
FRONT BODY PANEL (3)

FIG.590D

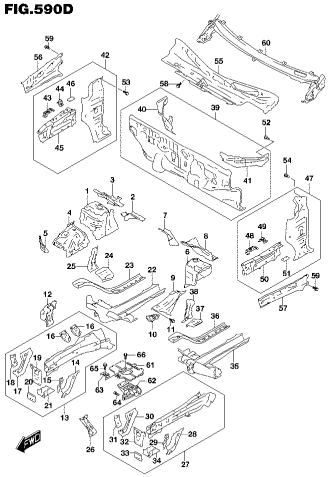

APK414-3 P22 590D
FRONT BODY PANEL (4)

FIG.600A

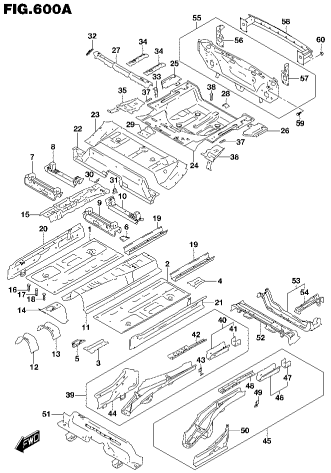

APK414-3 P22 600A
FLOOR PANEL (1)

FIG.600B

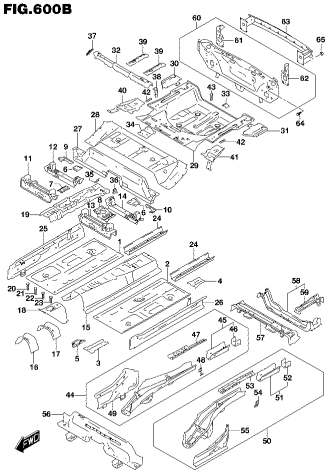

APK414-3 P22 600B
FLOOR PANEL (2)

FIG.600C

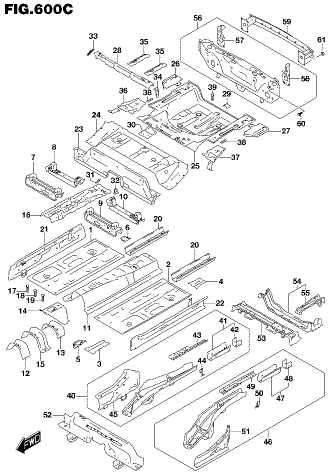

APK414-3 P22 600C
FLOOR PANEL (3)

FIG.600D

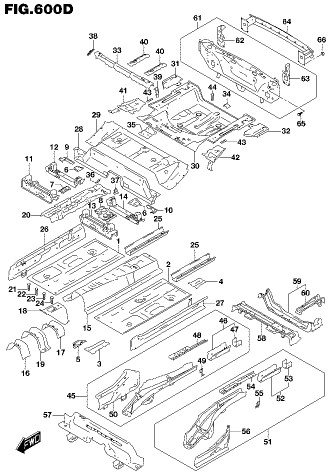

APK414-3 P22 600D
FLOOR PANEL (4)

FIG.640A

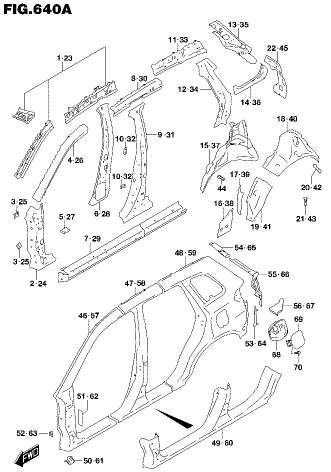

APK414-3 P22 640A
SIDE BODY PANEL (1)

FIG.640B

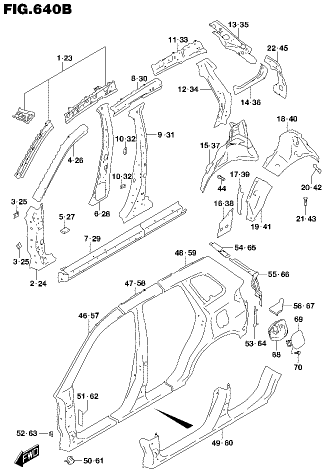

APK414-3 P22 640B
SIDE BODY PANEL (2)

FIG.660A

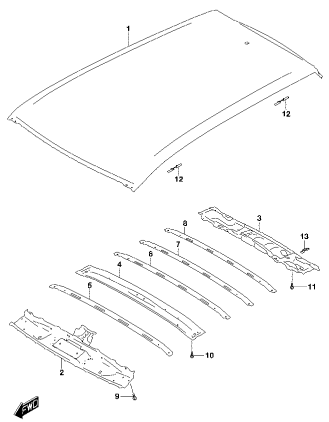

APK414-3 P22 660A
ROOF PANEL (1)

FIG.660B

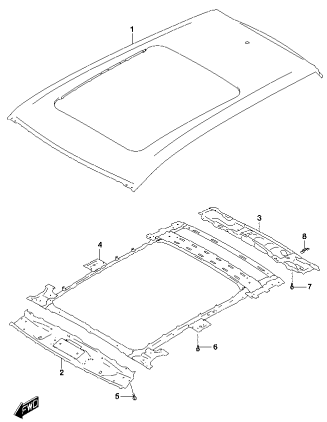

APK414-3 P22 660B
ROOF PANEL (2)

FIG.717A

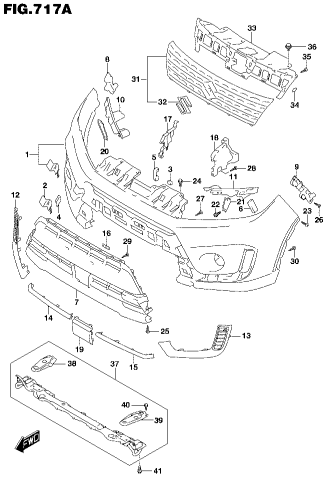

APK414-3 P22 717A
FRONT BUMPER (1)

FIG.717B

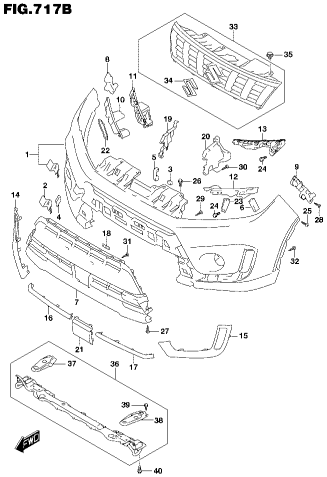

APK414-3 P22 717B
FRONT BUMPER (2)

FIG.717C

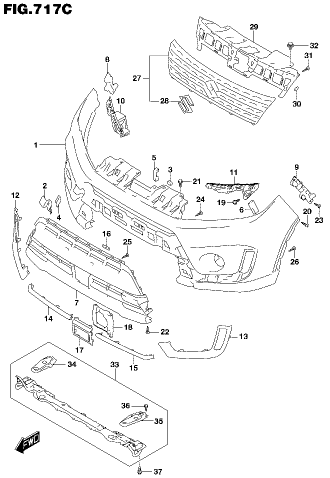

APK414-3 P22 717C
FRONT BUMPER (3)

FIG.717D

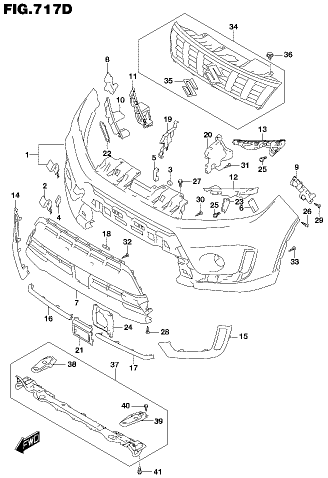

APK414-3 P22 717D
FRONT BUMPER (4)

FIG.717E

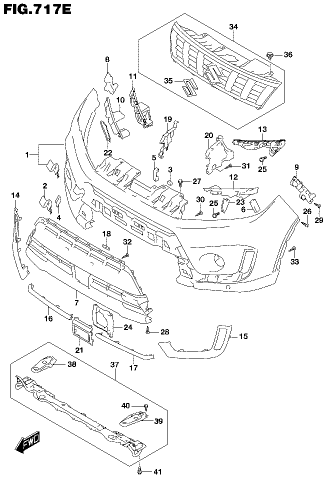

APK414-3 P22 717E
FRONT BUMPER (5)

FIG.718A

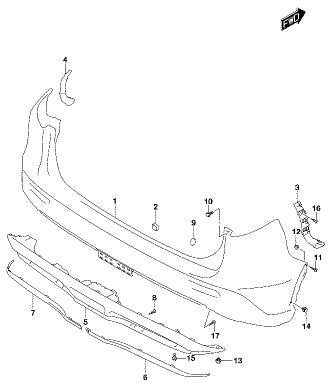

APK414-3 P22 718A
REAR BUMPER (1)

FIG.718B

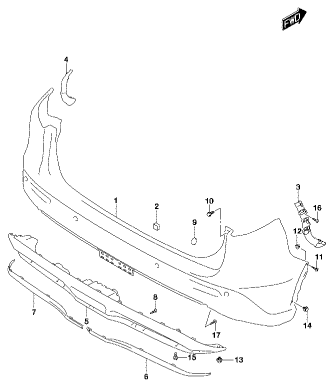

APK414-3 P22 718B
REAR BUMPER (2)

FIG.720A

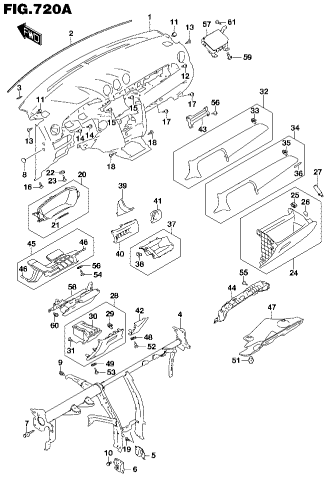

APK414-3 P22 720A
INSTRUMENT PANEL (1)

FIG.720B

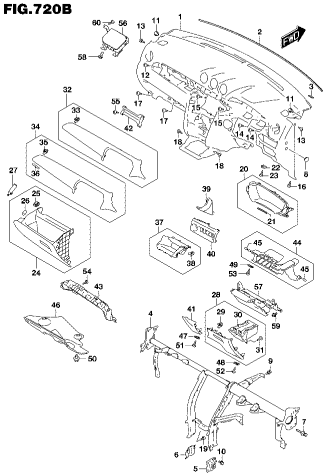

APK414-3 P22 720B
INSTRUMENT PANEL (2)

FIG.730A

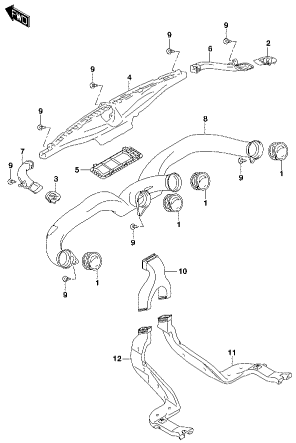

APK414-3 P22 730A
VENTILATOR (1)

FIG.730B

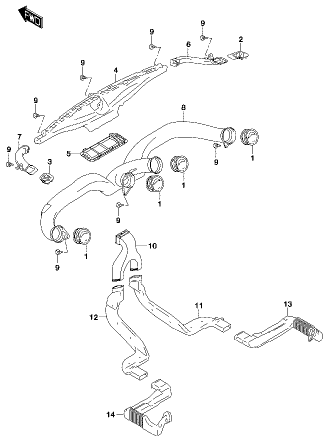

APK414-3 P22 730B
VENTILATOR (2)

FIG.730C

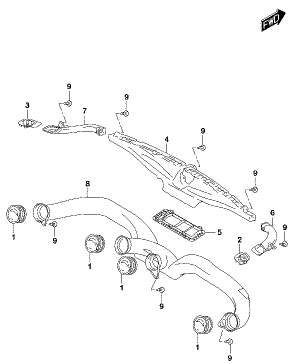

APK414-3 P22 730C
VENTILATOR (3)

FIG.732A

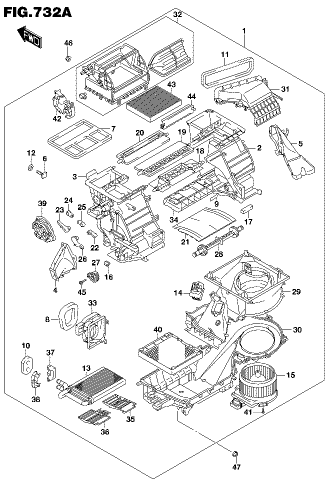

APK414-3 P22 732A
HEATER UNIT (1)

FIG.732B

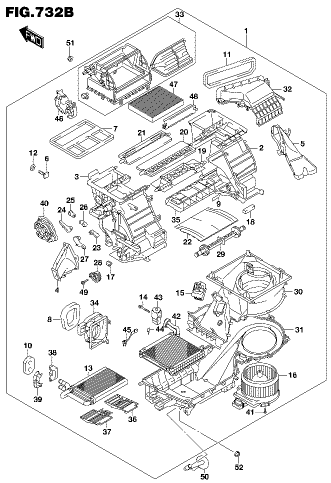

APK414-3 P22 732B
HEATER UNIT (2)

FIG.732C

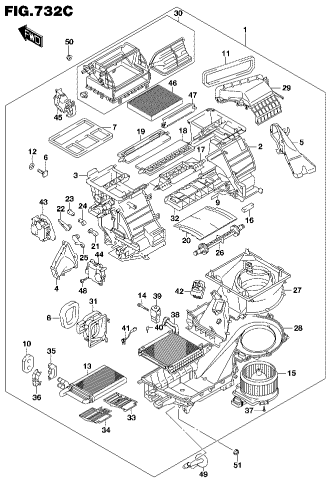

APK414-3 P22 732C
HEATER UNIT (3)

FIG.732D

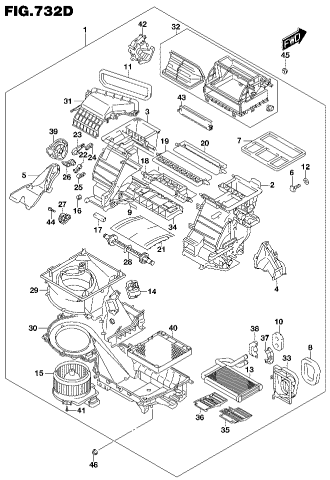

APK414-3 P22 732D
HEATER UNIT (4)

FIG.732E

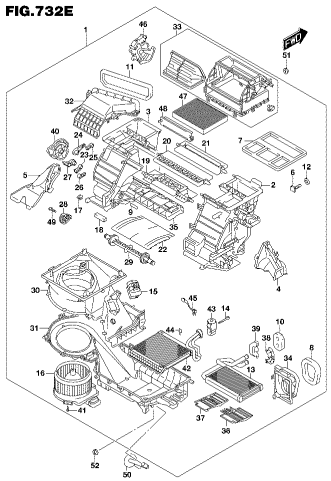

APK414-3 P22 732E
HEATER UNIT (5)

FIG.732F

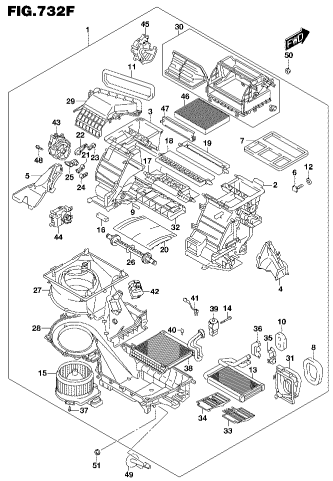

APK414-3 P22 732F
HEATER UNIT (6)

FIG.73AA

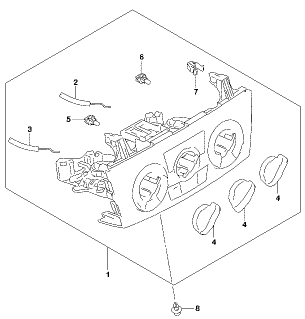

APK414-3 P22 73AA
HEATER CONTROL (1)

FIG.73AB

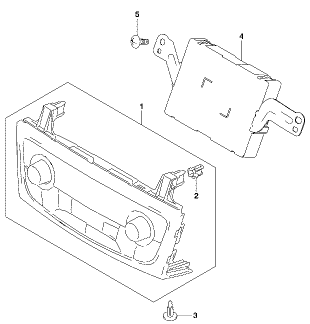

APK414-3 P22 73AB
HEATER CONTROL (2)

FIG.740A

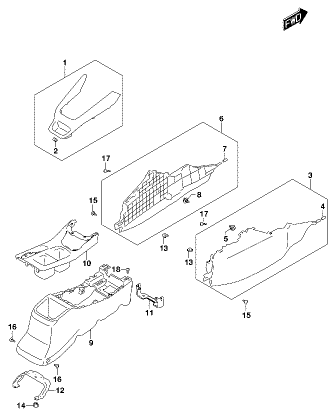

APK414-3 P22 740A
CONSOLE BOX (1)

FIG.740B

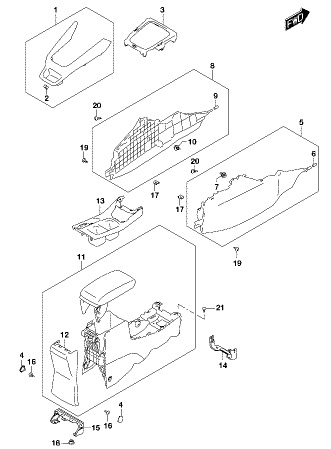

APK414-3 P22 740B
CONSOLE BOX (2)

FIG.740C

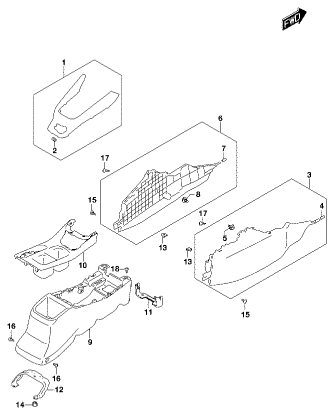

APK414-3 P22 740C
CONSOLE BOX (3)

FIG.740D

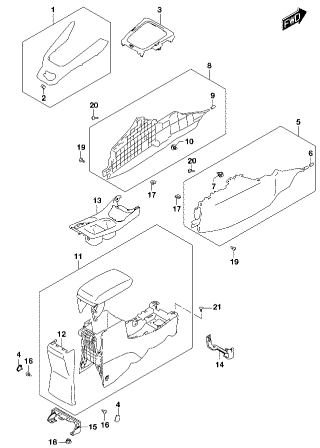

APK414-3 P22 740D
CONSOLE BOX (4)

FIG.741A

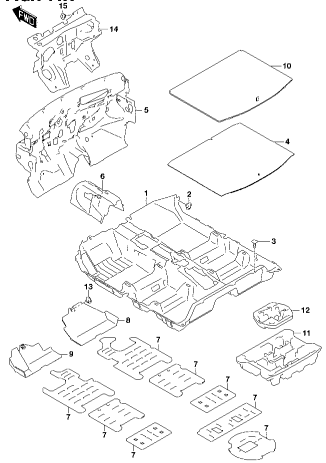

APK414-3 P22 741A
FLOOR CARPET (1)

FIG.741B

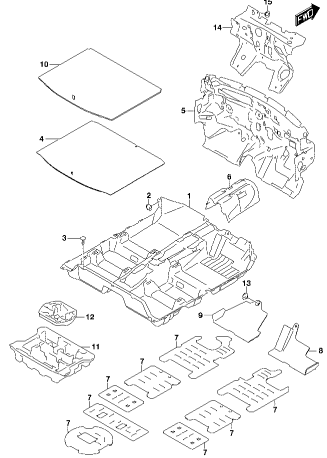

APK414-3 P22 741B
FLOOR CARPET (2)

FIG.745A

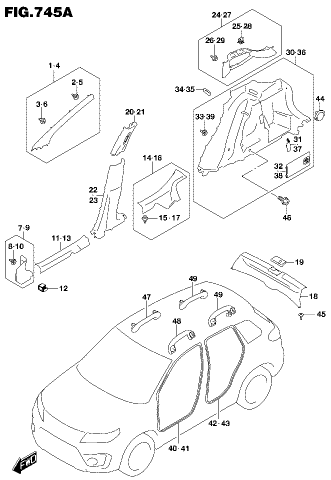

APK414-3 P22 745A
INTERIOR TRIM

FIG.750A

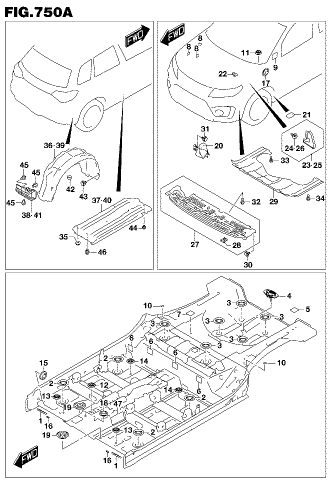

APK414-3 P22 750A
COVER/CAP

FIG.755A

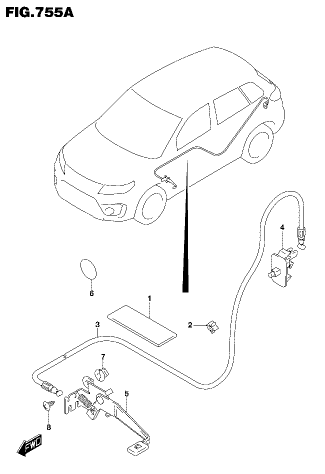

APK414-3 P22 755A
FUEL LID OPENER (1)

FIG.755B

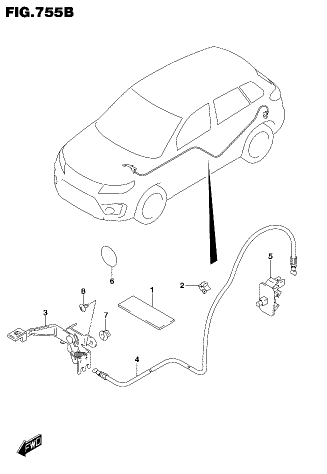

APK414-3 P22 755B
FUEL LID OPENER (2)

FIG.758A

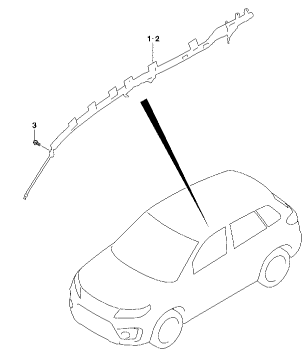

APK414-3 P22 758A
ROOF SIDE AIR BAG

FIG.760A

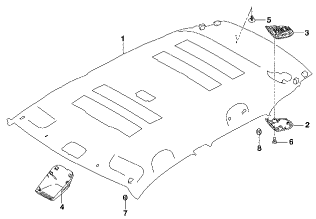

APK414-3 P22 760A
ROOF LINING (1)

FIG.760B

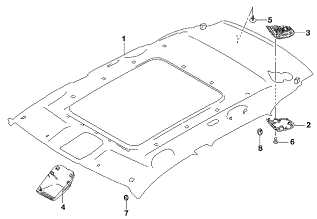

APK414-3 P22 760B
ROOF LINING (2)

FIG.772A

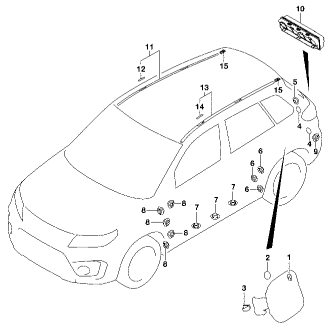

APK414-3 P22 772A
MOLDING (1)

FIG.772B

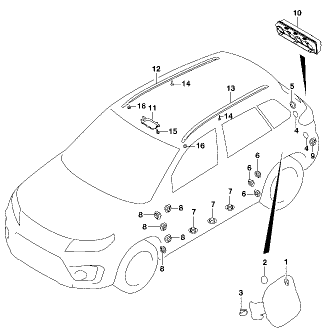

APK414-3 P22 772B
MOLDING (2)

FIG.774A

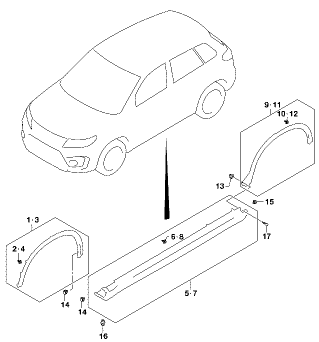

APK414-3 P22 774A
SPLASH GUARD

FIG.777A

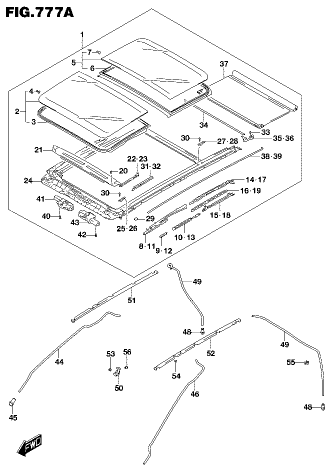

APK414-3 P22 777A
SLIDING ROOF

FIG.780A

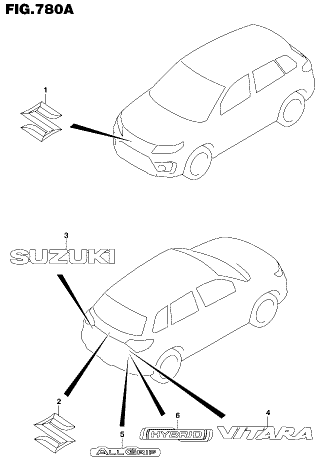

APK414-3 P22 780A
EMBLEM

FIG.790A

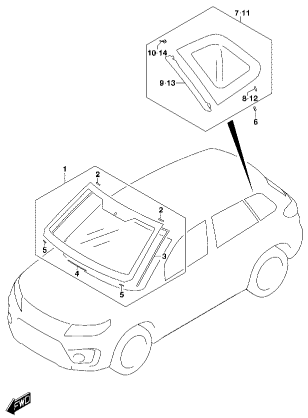

APK414-3 P22 790A
WINDSHIELD (1)

FIG.790B

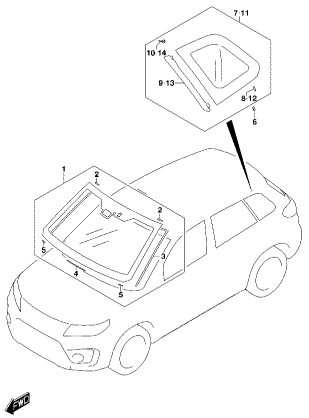

APK414-3 P22 790B
WINDSHIELD (2)

FIG.790C

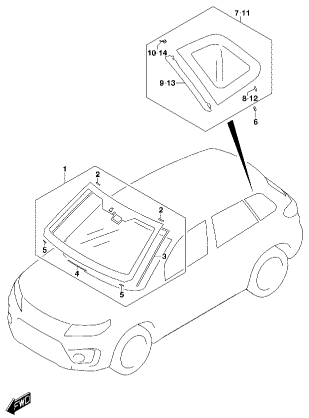

APK414-3 P22 790C
WINDSHIELD (3)

FIG.800A

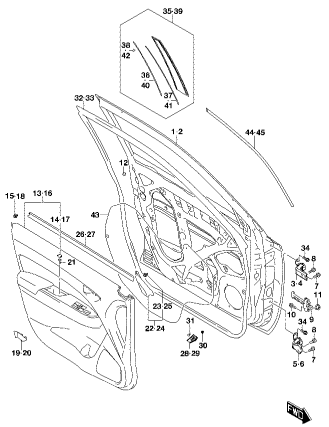

APK414-3 P22 800A
FRONT DOOR PANEL (1)

FIG.800B

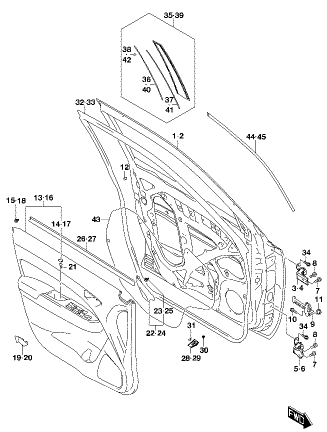

APK414-3 P22 800B
FRONT DOOR PANEL (2)

FIG.800C

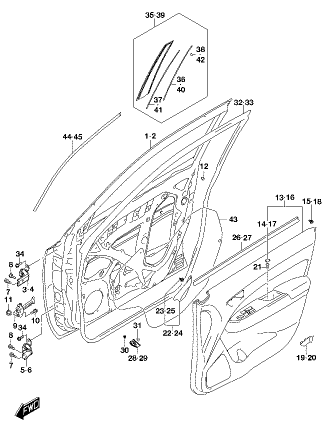

APK414-3 P22 800C
FRONT DOOR PANEL (3)

FIG.800D

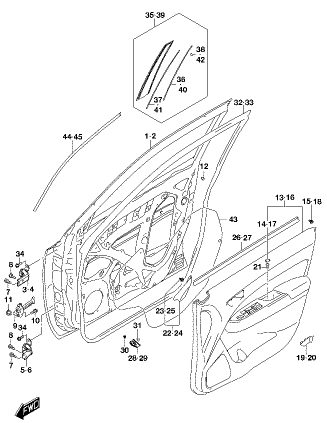

APK414-3 P22 800D
FRONT DOOR PANEL (4)

FIG.801A

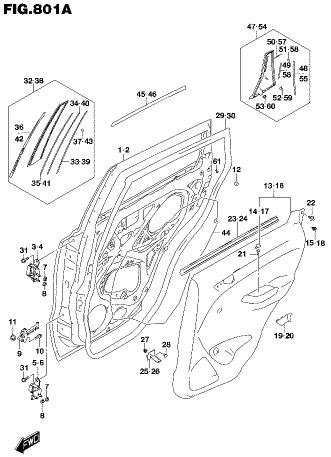

APK414-3 P22 801A
REAR DOOR PANEL (1)

FIG.801B

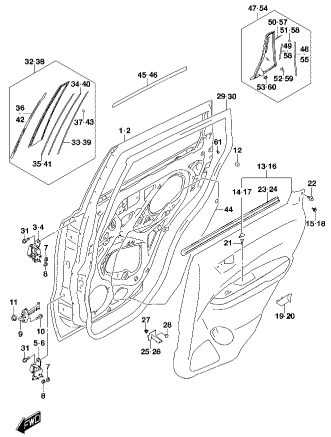

APK414-3 P22 801B
REAR DOOR PANEL (2)

FIG.805A

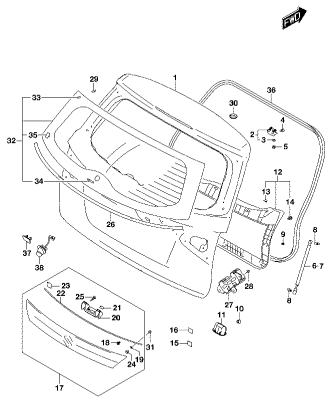

APK414-3 P22 805A
BACK DOOR PANEL (1)

FIG.805B

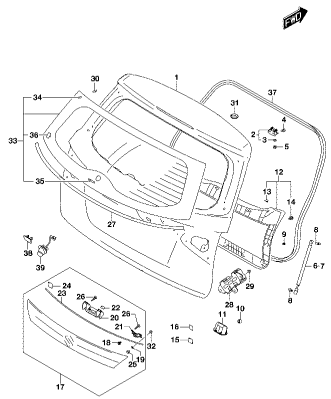

APK414-3 P22 805B
BACK DOOR PANEL (2)

FIG.810A

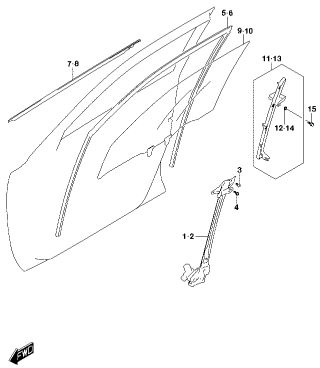

APK414-3 P22 810A
FRONT DOOR REGULATOR

FIG.811A

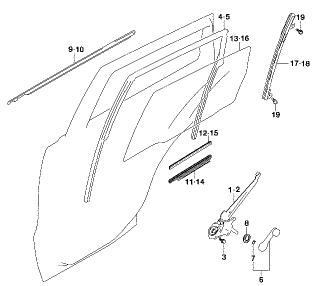

APK414-3 P22 811A
REAR DOOR REGULATOR (1)

FIG.811B

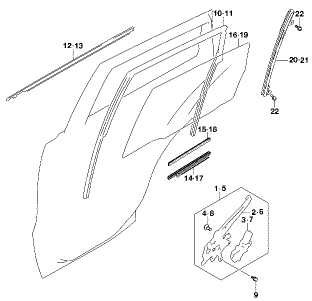

APK414-3 P22 811B
REAR DOOR REGULATOR (2)

FIG.820A

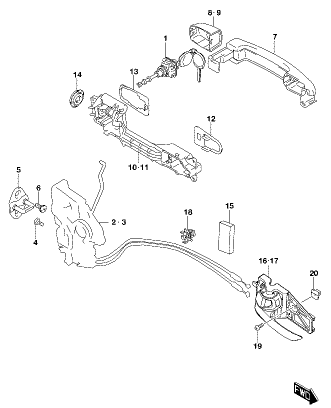

APK414-3 P22 820A
FRONT DOOR LOCK (1)

FIG.820B

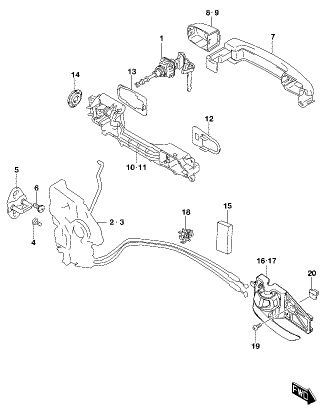

APK414-3 P22 820B
FRONT DOOR LOCK (2)

FIG.820C

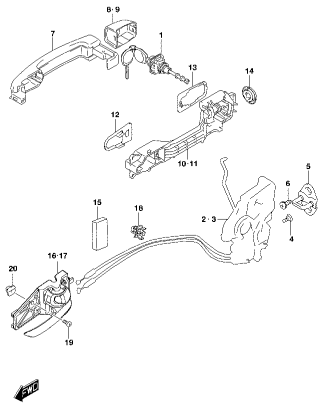

APK414-3 P22 820C
FRONT DOOR LOCK (3)

FIG.820D

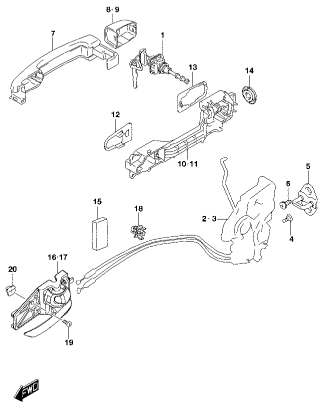

APK414-3 P22 820D
FRONT DOOR LOCK (4)

FIG.821A

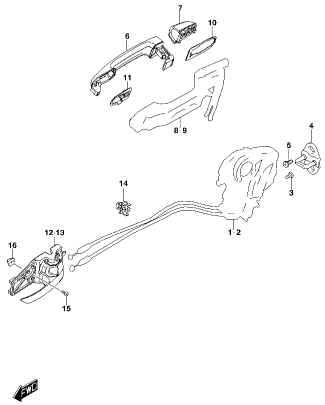

APK414-3 P22 821A
REAR DOOR LOCK (1)

FIG.821B

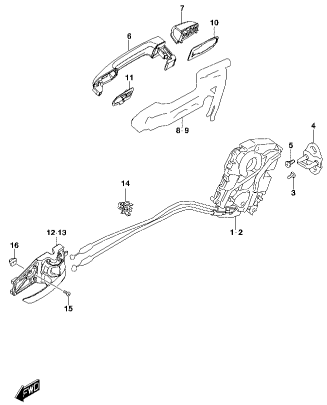

APK414-3 P22 821B
REAR DOOR LOCK (2)

FIG.824A

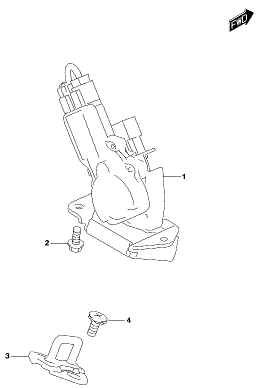

APK414-3 P22 824A
BACK DOOR LOCK

FIG.835A

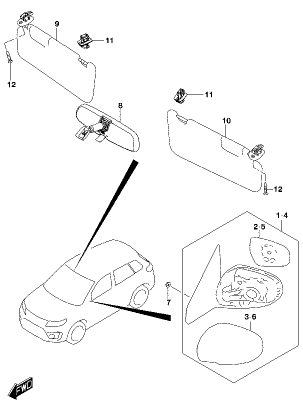

APK414-3 P22 835A
MIRROR/SUNVISOR (1)

FIG.835B

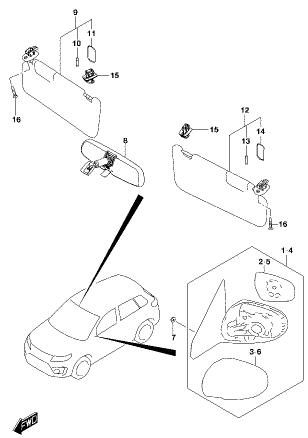

APK414-3 P22 835B
MIRROR/SUNVISOR (2)

FIG.835C

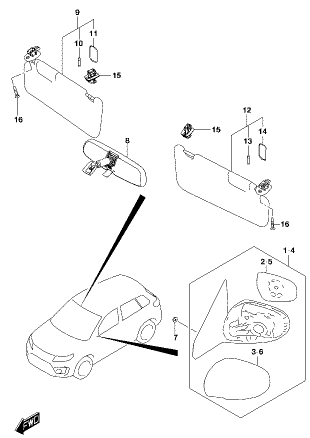

APK414-3 P22 835C
MIRROR/SUNVISOR (3)

FIG.835D

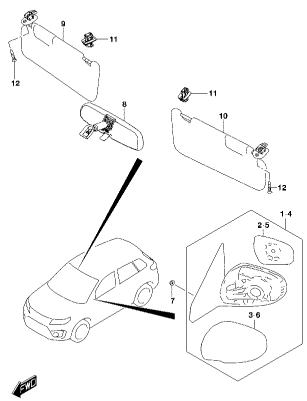

APK414-3 P22 835D
MIRROR/SUNVISOR (4)

FIG.835E

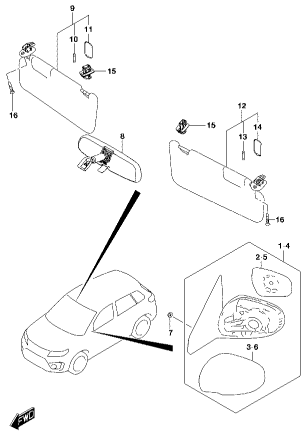

APK414-3 P22 835E
MIRROR/SUNVISOR (5)

FIG.835F

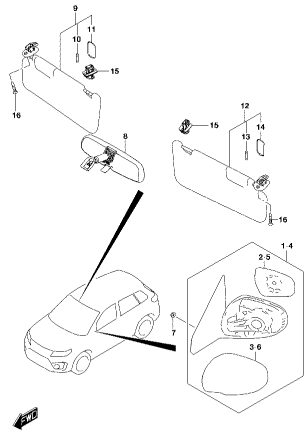

APK414-3 P22 835F
MIRROR/SUNVISOR (6)

FIG.835G

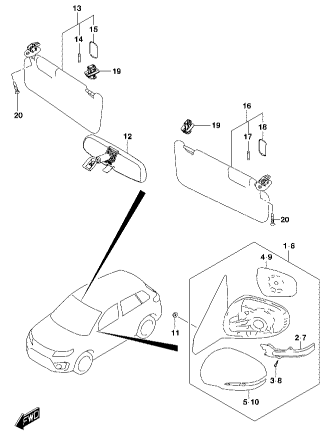

APK414-3 P22 835G
MIRROR/SUNVISOR (7)

FIG.840A

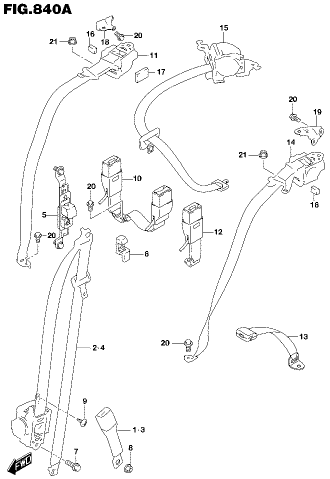

APK414-3 P22 840A
SEAT BELT

FIG.848A

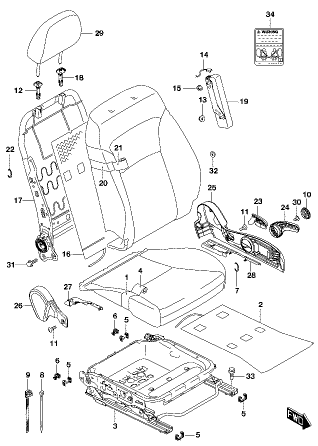

APK414-3 P22 848A
FRONT LH SEAT (1)

FIG.848B

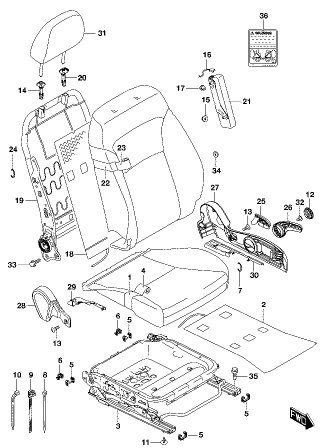

APK414-3 P22 848B
FRONT LH SEAT (2)

FIG.848C

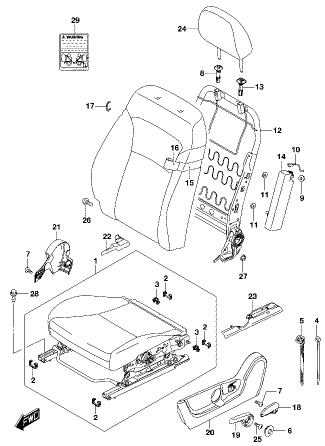

APK414-3 P22 848C
FRONT LH SEAT (3)

FIG.848D

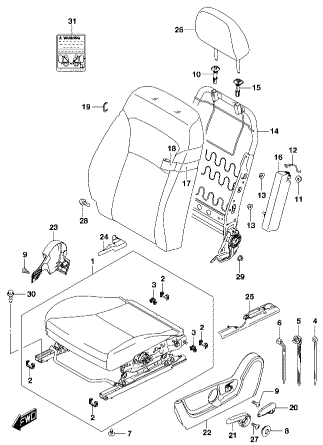

APK414-3 P22 848D
FRONT LH SEAT (4)

FIG.849A

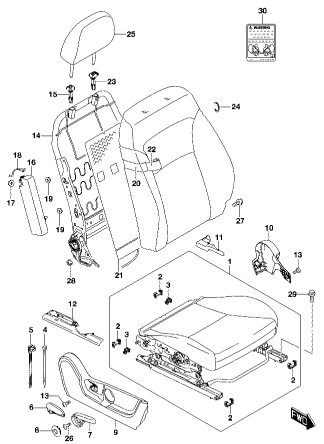

APK414-3 P22 849A
FRONT RH SEAT (1)

FIG.849B

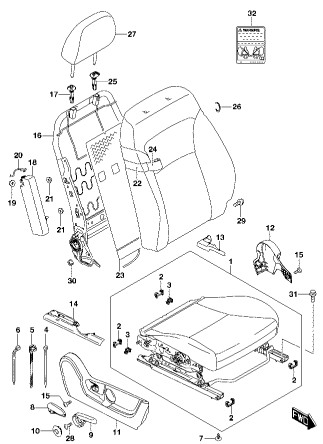

APK414-3 P22 849B
FRONT RH SEAT (2)

FIG.849C

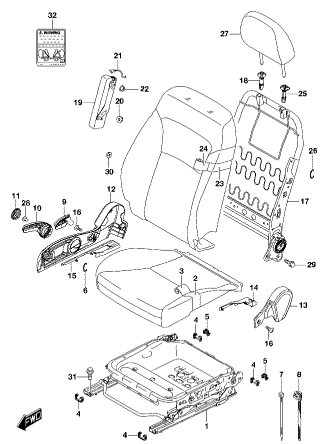

APK414-3 P22 849C
FRONT RH SEAT (3)

FIG.849D

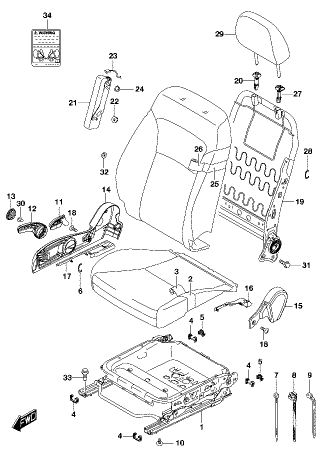

APK414-3 P22 849D
FRONT RH SEAT (4)

FIG.850A

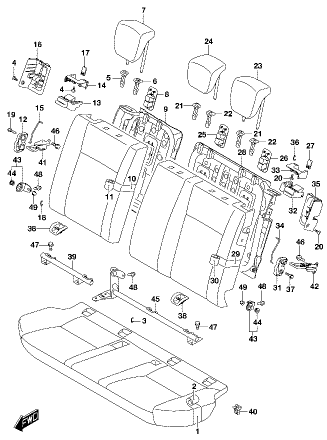

APK414-3 P22 850A
REAR SEAT

FIG.860A

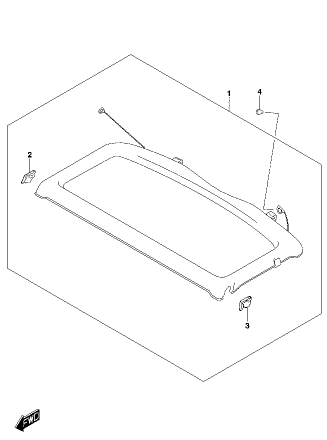

APK414-3 P22 860A
PARCEL SHELF

FIG.865A

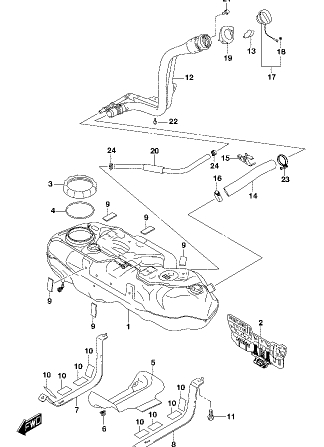

APK414-3 P22 865A
FUEL TANK (1)

FIG.865B

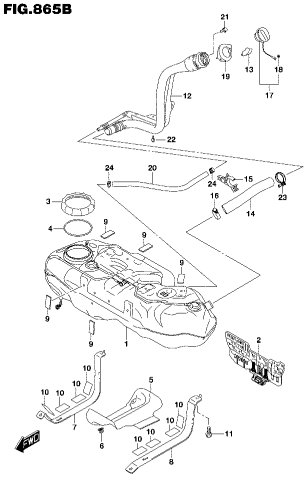

APK414-3 P22 865B
FUEL TANK (2)

FIG.893A

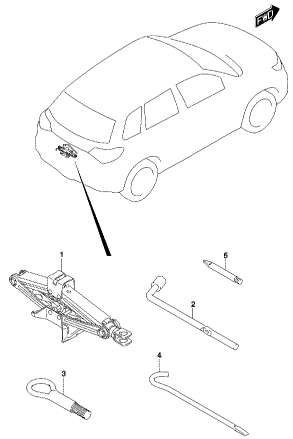

APK414-3 P22 893A
TOOL

FIG.952A

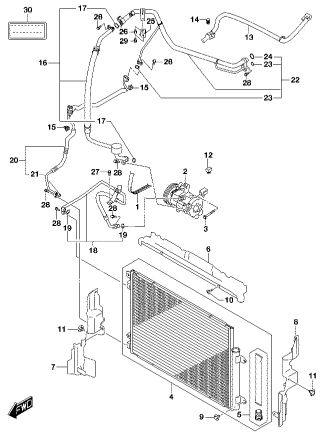

APK414-3 P22 952A
AIR CONDITIONER (1)

FIG.952B

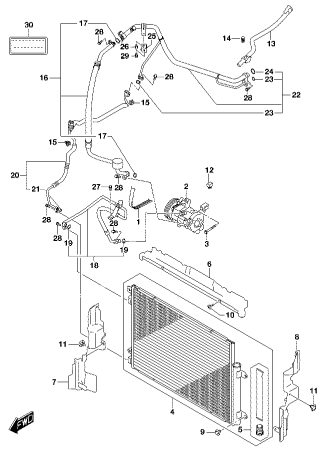

APK414-3 P22 952B
AIR CONDITIONER (2)

FIG.952C

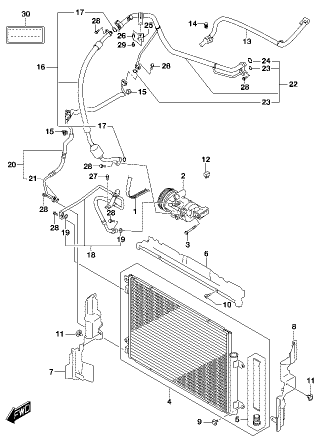

APK414-3 P22 952C
AIR CONDITIONER (3)

FIG.952D

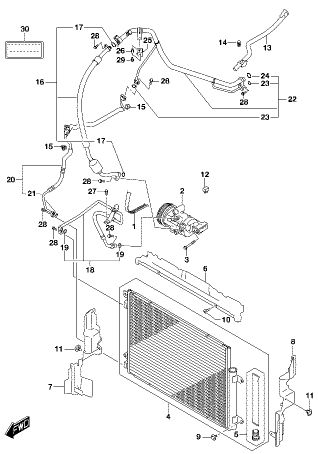

APK414-3 P22 952D
AIR CONDITIONER (4)

FIG.952E

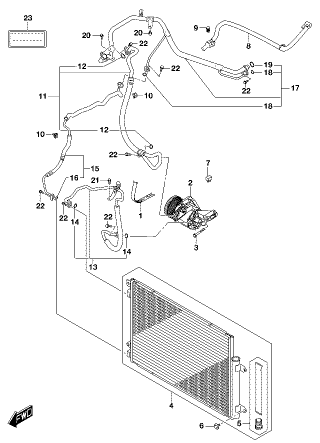

APK414-3 P22 952E
AIR CONDITIONER (5)

FIG.952F

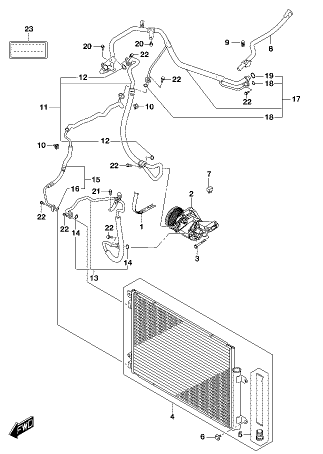

APK414-3 P22 952F
AIR CONDITIONER (6)

FIG.990A

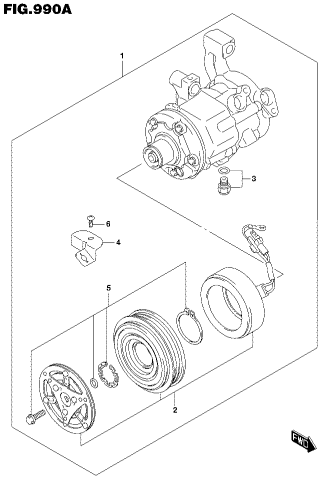

APK414-3 P22 990A
COMPRESSOR (1)

FIG.990B

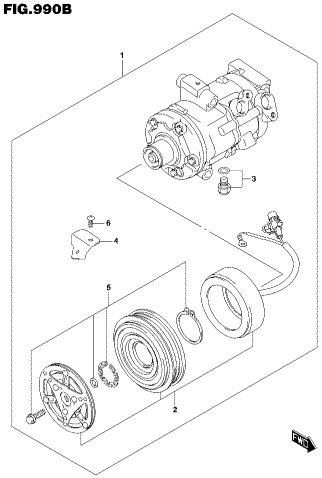

APK414-3 P22 990B
COMPRESSOR (2)

FIG.990C

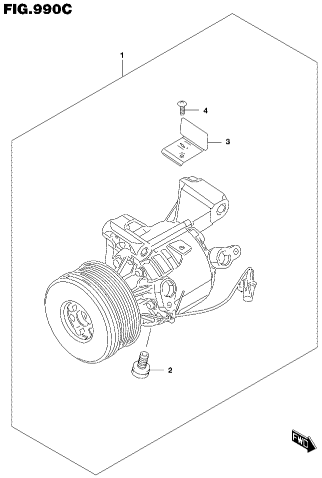

APK414-3 P22 990C
COMPRESSOR (3)

FIG.101A

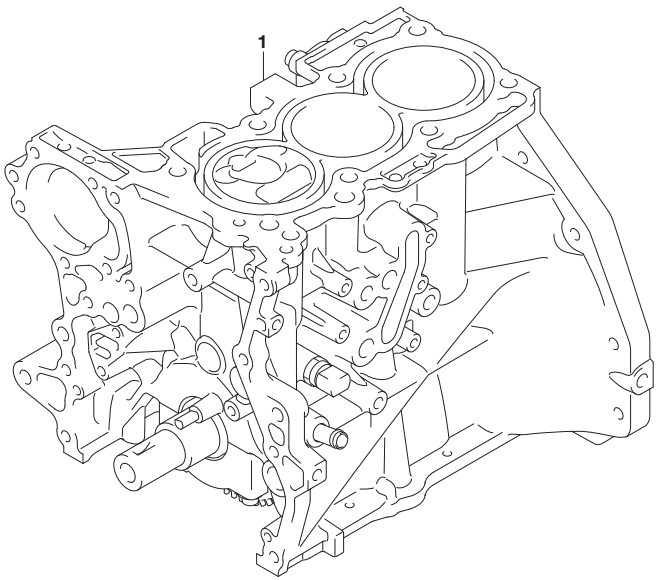

FIG.101A (1-B-2) SHORT ENGINE ASSY (K10C)

REF NO.	PART NO.	DESCRIPTION	Q'TY	REMARKS
1	11001-50810	ENGINE ASSY, SHORT K10C	1	

FIG.101B

FIG.101B (1-B-3) SHORT ENGINE ASSY (K14C)

REF NO.	PART NO.	DESCRIPTION	Q'TY	REMARKS
1-1	11001-68860	ENGINE ASSY, SHORT K14C	1	TYPE 3
1-2	11001-68880	ENGINE ASSY, SHORT K14C	1	TYPE 4

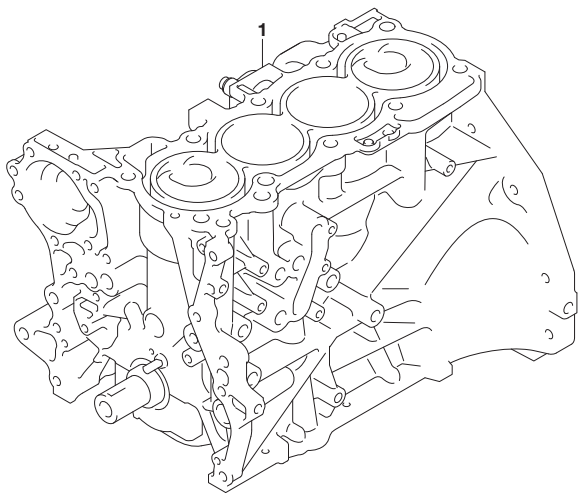

APK414-3 P22 101B
SHORT ENGINE ASSY (2)

FIG.101C

FIG.101C (1-B-4) SHORT ENGINE ASSY (K14D)

REF NO.	PART NO.	DESCRIPTION	Q'TY	REMARKS
1	11001-53820	ENGINE ASSY, SHORT K14D	1	

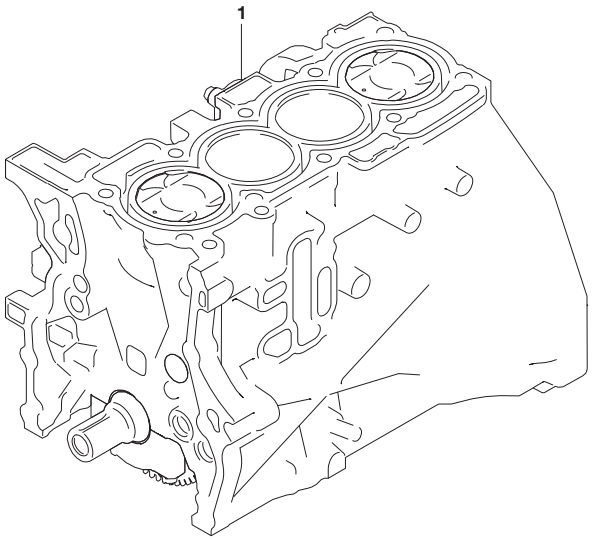

FIG.105A

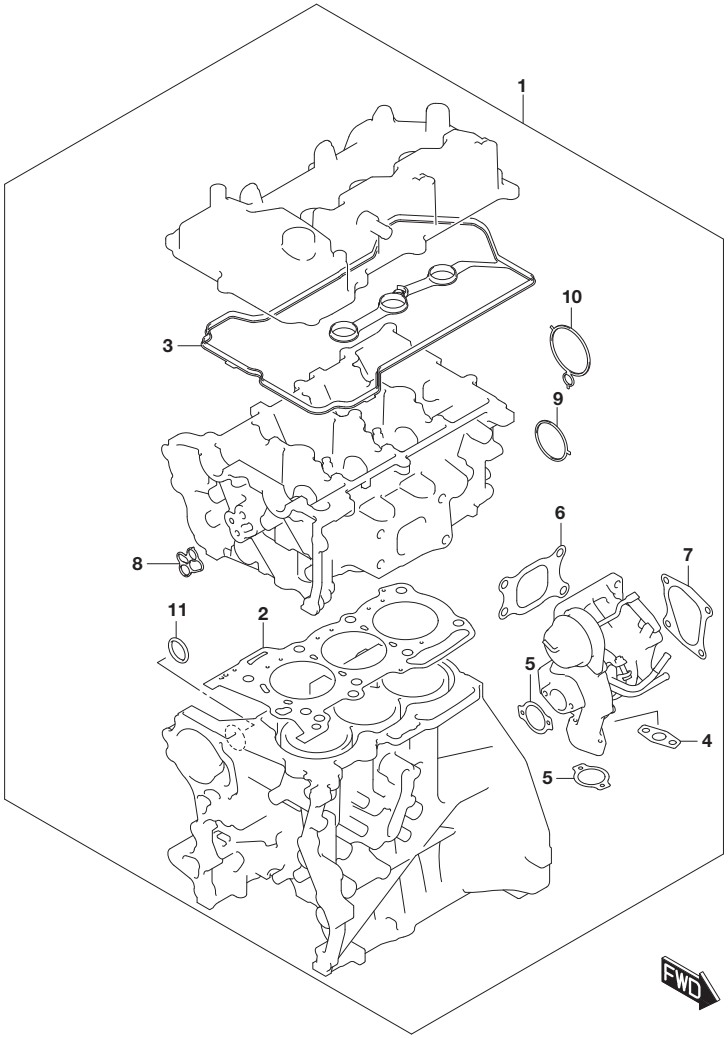

FIG.105A (1-B-5) ENGINE GASKET SET (K10C)

REF NO.	PART NO.	DESCRIPTION	Q'TY	REMARKS
1	11401-50821	GASKET SET, ENGINE	1	
2	11141-50R00	.GASKET, CYL HEAD	1	
3	11189-50R01	.GASKET, CYL HEAD COVER	1	
4	13945-50R00	.GASKET, OIL DRAIN	1	
5	13955-75F50	.GASKET, INTK AIR PIPE	2	
6	14181-86P00	.GASKET, TURBO CHARGER	1	
7	14182-86P00	.GASKET, TC OUTLET PIPE	1	
8	16118-50R00	.O RING, OCV	1	
9	17699-61P01	.O RING, THERMO CASE	1	
10	17699-68M00	.O RING, THERMO CASE	1	
11	09280-28008	.O RING (D:3.5,ID:27.7)	1	

FIG.105B

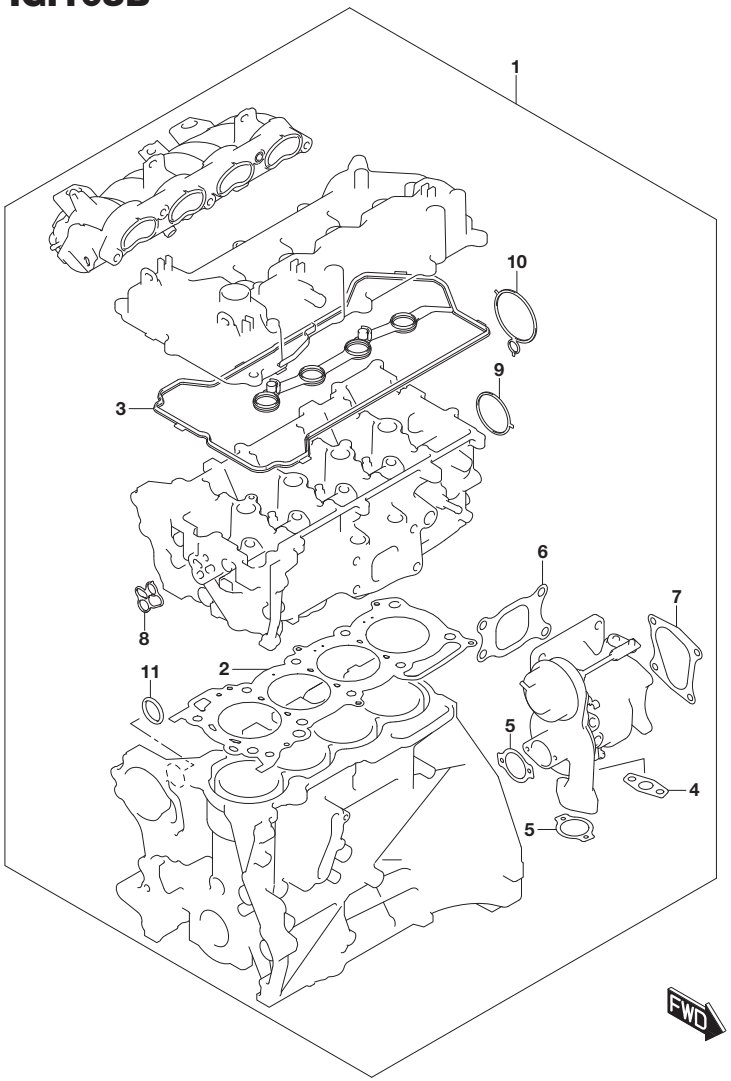

FIG.105B (1-B-6) ENGINE GASKET SET (K14C)

REF NO.	PART NO.	DESCRIPTION	Q'TY	REMARKS
1	11401-68862	GASKET SET, ENGINE	1	
2	11141-68M02	.GASKET, CYLINDER HEAD	1	
3	11189-68M01	.GASKET, CYLINDER HEAD COVER	1	
4	13945-86P00	.GASKET, OIL DRAIN	1	
5	13955-75F50	.GASKET, INTK AIR PIPE	2	
6	14181-86P00	.GASKET, TURBO CHARGER	1	
7	14182-86P00	.GASKET, TC OUTLET PIPE	1	
8	16118-68M00	.O RING, OCV	1	
9	17699-61P01	.O RING, THERMO CASE	1	
10	17699-68M00	.O RING, THERMO CASE	1	
11	09280-28008	.O RING (D:3.5,ID:27.7)	1	

FIG.105C

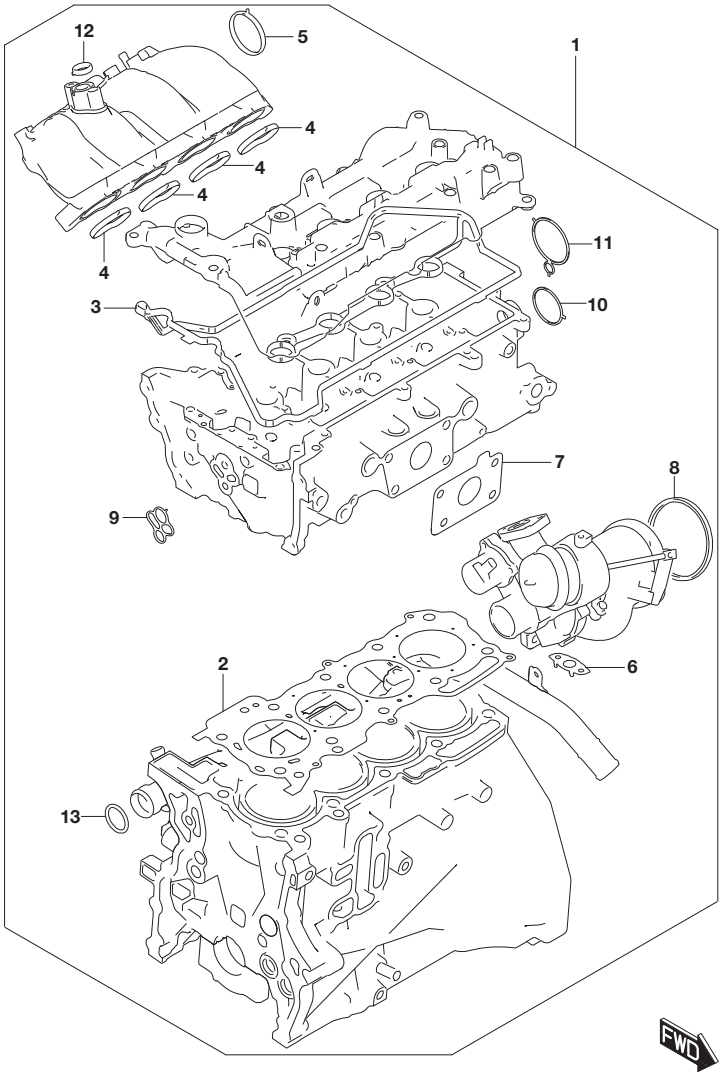

FIG.105C (1-B-7) ENGINE GASKET SET (K14D)

REF NO.	PART NO.	DESCRIPTION	Q'TY	REMARKS
1	11400-53850	GASKET SET, ENGINE	1	
2	11141-53SB0	.GASKET, CYLINDER HEAD	1	
3	11189-53SA0	.GASKET, CYLINDER HEAD COVER	1	
4	13118-61MA0	.GASKET, INTK MANF	4	
5	13421-61MA0	.GASKET, THROTTLE BODY	1	
6	13945-86P00	.GASKET, OIL DRAIN	1	
7	14181-53SA0	.GASKET, TURBO CHARGER	1	
8	14182-53SA0	.GASKET, TC OUTLET	1	
9	16118-53S00	.O RING, OCV	1	
10	17699-61P01	.O RING, THERMO CASE	1	
11	17699-68M00	.O RING, THERMO CASE	1	
12	18534-53SA0	.GASKET, EGR	1	
13	09280-28008	.O RING (D:3.5,ID:27.7)	1	

FIG.111A

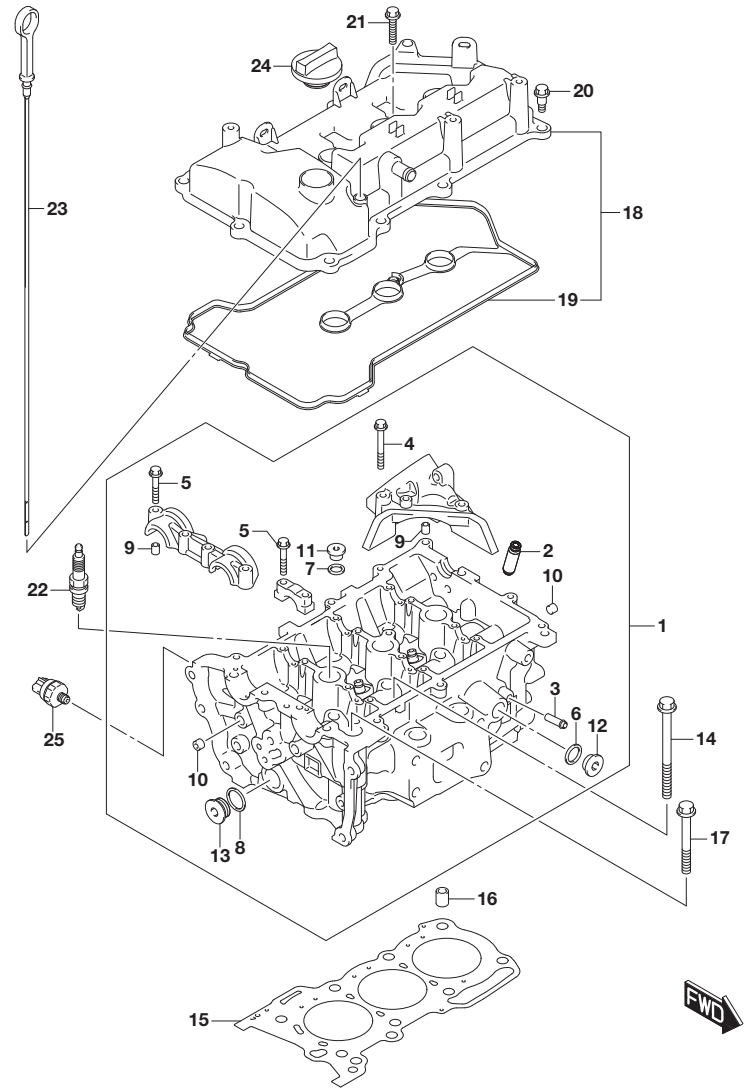

FIG.111A (1-B-8) CYLINDER HEAD (K10C)

REF NO.	PART NO.	DESCRIPTION	Q'TY	REMARKS
1	11100-50R00	HEAD ASSY, CYLINDER	1	
2	11115-69L00-001	.GUIDE, VALVE	12	
3	09364-08016	.UNION	1	
4	11128-68M10	.BOLT, CAMSHAFT HOUSING (6X55)	3	
5	11128-69G01	.BOLT, CAMSHAFT HOUSING (6X39)	16	
6	11216-77E00	.GASKET (18X23.5X0.84)	4	
7	11216-84MA0	.GASKET (12.5X17.5X0.9)	2	
8	11216-90J00	.GASKET, PLUG (M22)	1	
9	09206-08001	.PIN (8X11)	4	
10	09246-05006	.PLUG (1/8PT,H:8)	3	
11	09248-12005	.PLUG (12X9)	2	
12	09248-18011	.PLUG (18X8)	4	
13	09248-22007	.PLUG (22X11)	1	
14	11117-68M00	BOLT, CYLINDER HEAD	8	
15	11141-50R00	GASKET, CYL HEAD	1	
16	09206-13020	PIN (10.4X13X18)	2	
17	01550-0880A	BOLT	1	
18	11170-50R01	COVER ASSY, CYLINDER HEAD	1	
19	11189-50R01	.GASKET, CYL HEAD COVER	1	
20	11178-69L00	BOLT, CYLINDER HEAD COVER	10	
21	01547-0635A	BOLT	1	
22	09482-00642	SPARK PLUG (NGK,ILZKR7D8)	3	
23	16910-68M00	GAUGE, OIL LEVEL	1	
24	16920-50M01	CAP, OIL FILLER	1	
25	37820-73HP0	SWITCH ASSY, OIL PRESSURE	1	

FIG.111B

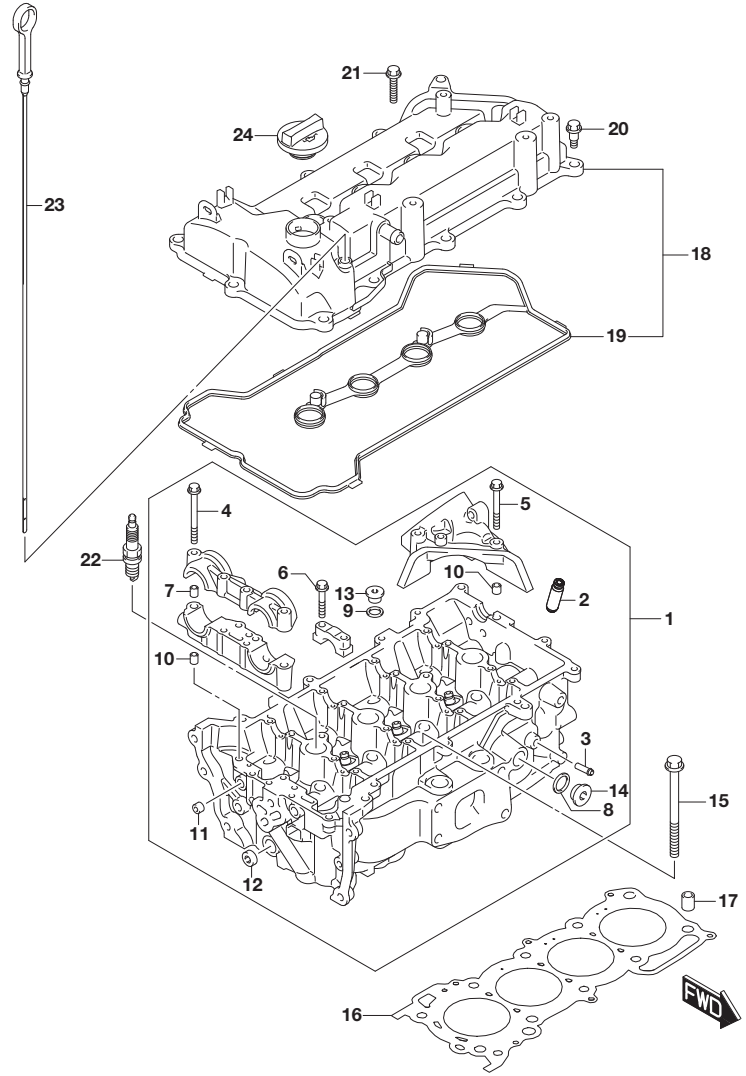

FIG.111B (1-B-9) CYLINDER HEAD (K14C)

REF NO.	PART NO.	DESCRIPTION	Q'TY	REMARKS
1	11100-68M00	HEAD ASSY, CYLINDER	1	
2	11115-69L00-001	.GUIDE, VALVE	16	
3	09364-08016	.UNION	1	
4	11128-68M00	.BOLT, CAMSHAFT HOUSING (6X70)	4	
5	11128-68M10	.BOLT, CAMSHAFT HOUSING (6X55)	3	
6	11128-69G01	.BOLT, CAMSHAFT HOUSING (6X39)	16	
7	09206-08001	.PIN (8X11)	2	
8	11216-77E00	.GASKET (18X23.5X0.84)	4	
9	11216-84MA0	.GASKET (12.5X17.5X0.9)	3	
10	09206-08001	.PIN (8X11)	4	
11	09246-05006	.PLUG (1/8PT,H:8)	3	
12	09246-08004	.PLUG (3/8PT,H:7.5)	1	
13	09248-12005	.PLUG (12X9)	3	
14	09248-18011	.PLUG (18X8)	4	
15	11117-68M00	BOLT, CYLINDER HEAD	10	
16	11141-68M02	GASKET, CYLINDER HEAD	1	
17	09206-13020	PIN (10.4X13X18)	2	
18	11170-68M01	COVER ASSY, CYLINDER HEAD	1	
19	11189-68M01	.GASKET, CYLINDER HEAD COVER	1	
20	11178-69L00	BOLT, CYLINDER HEAD COVER	12	
21	01547-0635A	BOLT	2	
22	09482-00642	SPARK PLUG (NGK,ILZKR7D8)	4	
23	16910-68M00	GAUGE, OIL LEVEL	1	
24	16920-50M01	CAP, OIL FILLER	1	

FIG.111C

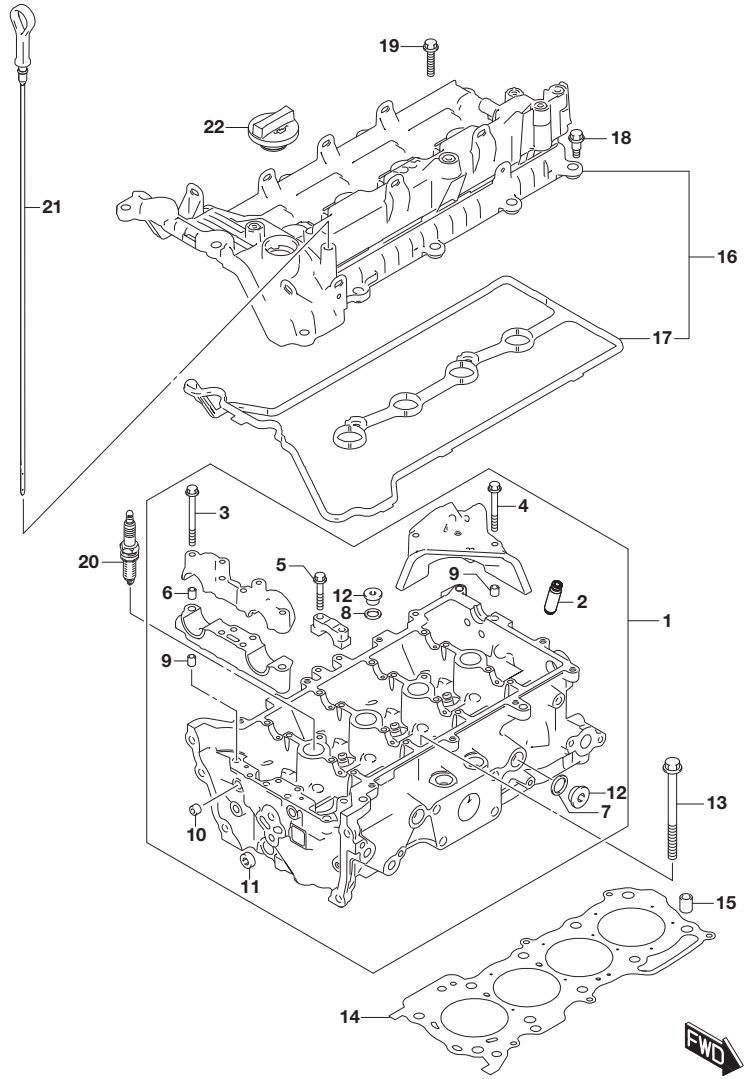

FIG.111C (1-B-10) CYLINDER HEAD (K14D)

REF NO.	PART NO.	DESCRIPTION	Q'TY	REMARKS
1	11100-53SA0	HEAD ASSY, CYLINDER	1	
2	11115-69L00-001	.GUIDE, VALVE	16	
3	11128-68M00	.BOLT, CAMSHAFT HOUSING (6X70)	4	
4	11128-68M10	.BOLT, CAMSHAFT HOUSING (6X55)	3	
5	11128-69G01	.BOLT, CAMSHAFT HOUSING (6X39)	16	
6	09206-08001	.PIN (8X11)	2	
7	11216-77E00	.GASKET (18X23.5X0.84)	7	
8	11216-84MA0	.GASKET (12.5X17.5X0.9)	1	
9	09206-08001	.PIN (8X11)	4	
10	09246-05006	.PLUG (1/8PT,H:8)	3	
11	09246-08004	.PLUG (3/8PT,H:7.5)	1	
12	09248-18011	.PLUG (18X8)	7	
13	11117-68M00	BOLT, CYLINDER HEAD	10	
14	11141-53SB0	GASKET, CYLINDER HEAD	1	
15	09206-13020	PIN (10.4X13X18)	2	
16	11170-53SA0	COVER ASSY, CYLINDER HEAD	1	
17	11189-53SA0	.GASKET, CYLINDER HEAD COVER	1	
18	11178-69L00	BOLT, CYLINDER HEAD COVER	12	
19	01547-0635A	BOLT	2	
20	09482-00663	SPARK PLUG (NGK,ILZKR7N8S)	4	
21	16910-53SA0	GAUGE, OIL LEVEL	1	
22	16920-50M01	CAP, OIL FILLER	1	

FIG.112A

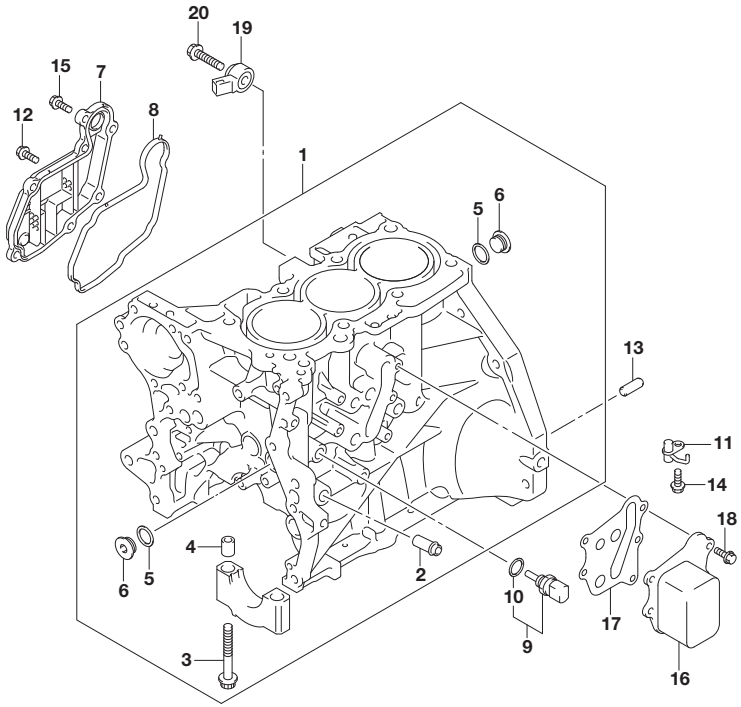

FIG.112A (1-B-11) CYLINDER (K10C)

REF NO.	PART NO.	DESCRIPTION	Q'TY	REMARKS
1	11200-50R10-X12	BLOCK ASSY, CYLINDER	1	
2	09364-12001	.UNION	1	
3	11261-69J01	.BOLT, CRANK BEARING CAP	8	
4	04211-13189	.PIN	8	
5	11216-77E00	.GASKET (18X23.5X0.84)	3	
6	09248-18011	.PLUG (18X8)	3	
7	11220-50R00	PLATE, BREATHER	1	
8	11223-50R01	GASKET, BREATHER PLATE	1	
9	16570-84MA0	SENSOR, OIL TEMP	1	
10	16572-84MA0	.GASKET, OIL TEMP SENSOR	1	
11	16710-68M00	JET, PISTON COOLING	3	
12	09103-06130	BOLT (6X20)	1	
13	09202-08004	PIN (8X23)	2	
14	01550-0616A	BOLT	3	
15	01550-0620A	BOLT	6	
16	16600-68M00	COOLER ASSY, OIL	1	
17	16621-68M00	GASKET, OIL COOLER	1	
18	09103-06267	BOLT (6X18)	5	
19	18640-61MA0	SENSOR ASSY, KNOCK	1	
20	01550-0835A	BOLT	1	

FIG.112B

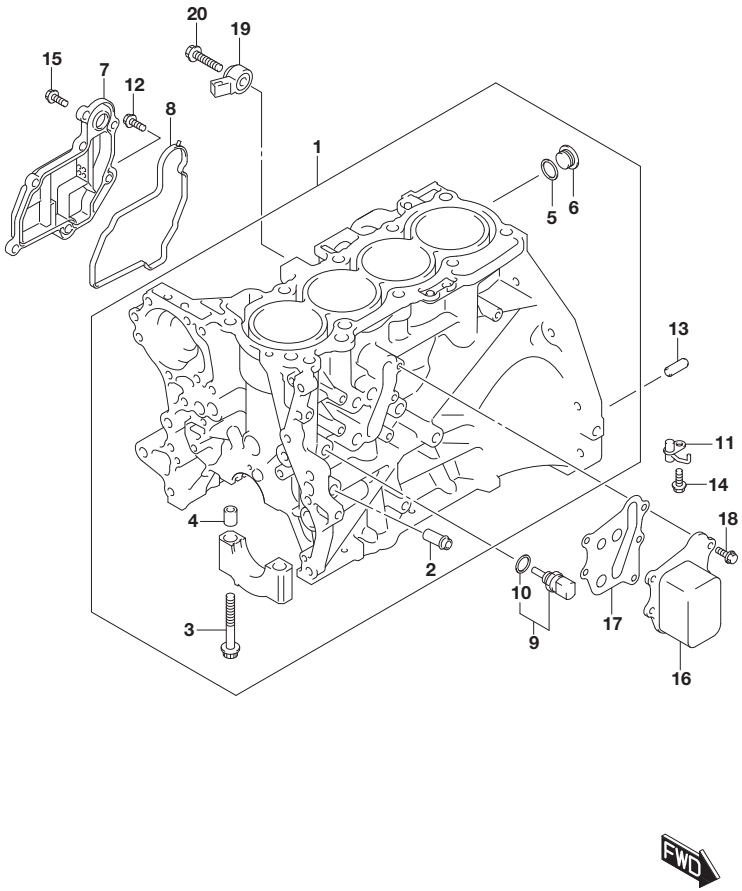

FIG.112B (1-B-12) CYLINDER (K14C)

REF NO.	PART NO.	DESCRIPTION	Q'TY	REMARKS
1	11200-68M00-X12	BLOCK ASSY, CYLINDER	1	
2	09364-12001	.UNION	1	
3	11261-69J01	.BOLT, CRANK BEARING CAP	10	
4	04211-13189	.PIN	10	
5	11216-77E00	.GASKET (18X23.5X0.84)	3	
6	09248-18011	.PLUG (18X8)	3	
7	11220-68M00	PLATE, BREATHER	1	
8	11223-68M01	GASKET, BREATHER PLATE	1	
9	16570-84MA0	SENSOR, OIL TEMP	1	
10	16572-84MA0	.GASKET, OIL TEMP SENSOR	1	
11	16710-68M00	JET, PISTON COOLING	4	
12	09103-06286	BOLT (6X20)	1	
13	09202-08004	PIN (8X23)	2	
14	01550-0616A	BOLT	4	
15	01550-0620A	BOLT	6	
16	16600-68M00	COOLER ASSY, OIL	1	
17	16621-68M00	GASKET, OIL COOLER	1	
18	09103-06267	BOLT (6X18)	5	
19	18640-61MA0	SENSOR ASSY, KNOCK	1	
20	01550-0835A	BOLT	1	

FIG.112C

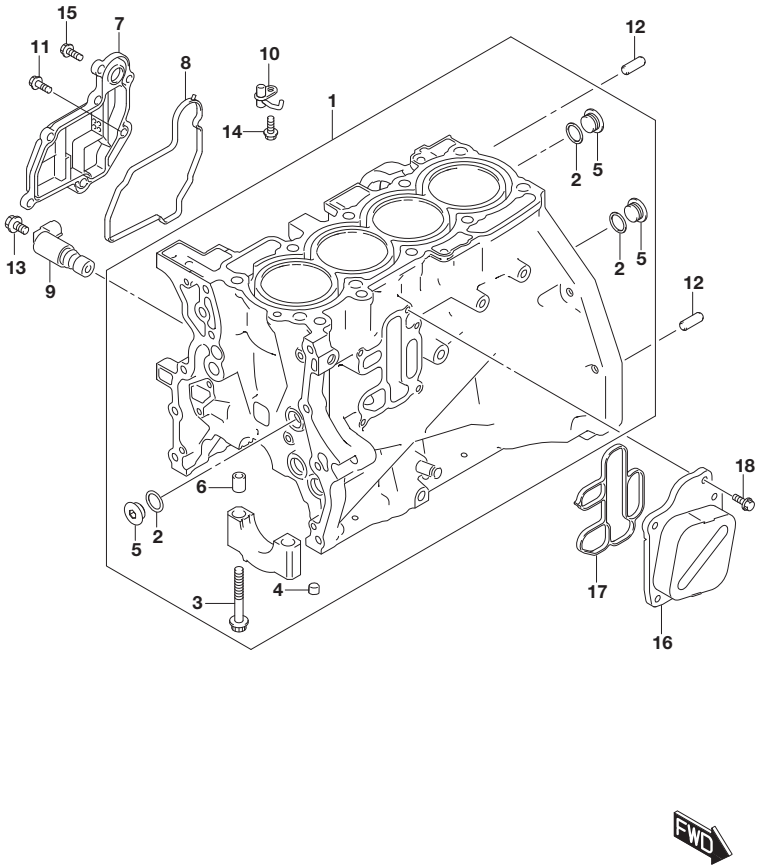

FIG.112C (1-B-13) CYLINDER (K14D)

REF NO.	PART NO.	DESCRIPTION	Q'TY	REMARKS
1	11200-53SA0-X12	BLOCK ASSY, CYLINDER	1	
2	11216-77E00	.GASKET (18X23.5X0.84)	3	
3	11261-69J01	.BOLT, CRANK BEARING CAP	10	
4	09246-05006	.PLUG (1/8PT,H:8)	1	
5	09248-18011	.PLUG (18X8)	3	
6	04211-13189	.PIN	10	
7	11220-68M00	PLATE, BREATHER	1	
8	11223-68M01	GASKET, BREATHER PLATE	1	
9	16560-53S00	VALVE, OIL SWITCH	1	
10	16710-53SA0	JET, PISTON COOLING	4	
11	09103-06549	BOLT (6X18)	1	
12	09202-08004	PIN (8X23)	2	
13	01550-0612A	BOLT	1	
14	01550-0616A	BOLT	4	
15	01550-0620A	BOLT	6	
16	16600-53SA0	COOLER ASSY, OIL	1	
17	16621-53SA0	GASKET, OIL COOLER	1	
18	01550-0620A	BOLT	5	

FIG.115A

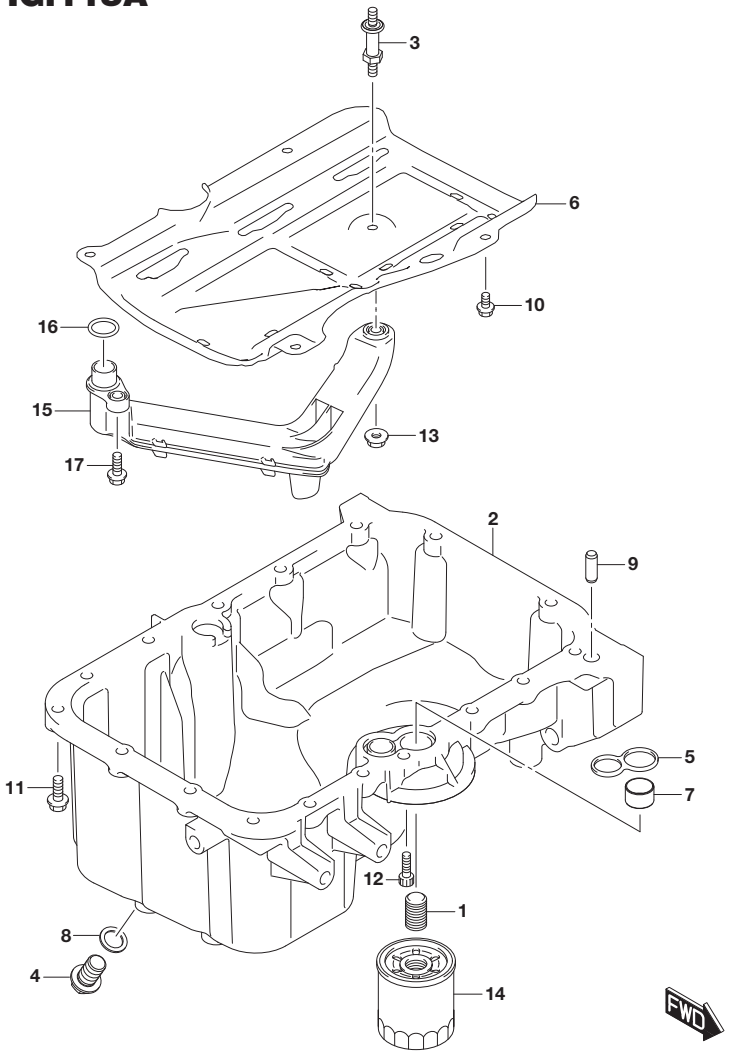

FIG.115A (1-B-14) OIL PAN (K10C)

REF NO.	PART NO.	DESCRIPTION	Q'TY	REMARKS
1	11241-65H02	STAND, OIL FILTER	1	
2	11511-50R00	PAN, OIL	1	
3	11515-51K03	STUD BOLT, OIL PAN BAFFLE	1	
4	11518-63J20	PLUG, OIL DRAIN	1	
5	11518-69J00	O RING, OIL PAN	1	
6	11541-84MA0	PLATE, OIL PAN BAFFLE	1	
7	16114-69J00	PIN, OIL PAN DOWEL	1	
8	09168-14015	GASKET (14X20X1.5)	1	
9	09202-08004	PIN (8X23)	1	
10	01550-0612A	BOLT	4	
11	01550-0625C	BOLT	16	
12	07130-0625A	BOLT	1	
13	08316-1006A	NUT	1	
14	16510-82703	FILTER ASSY, OIL	1	
15	16520-85L00	STRAINER, OIL PUMP	1	
16	09280-17002	O RING (D:2.4,ID:16.8)	1	
17	07120-0620A	BOLT	1	

FIG.115B

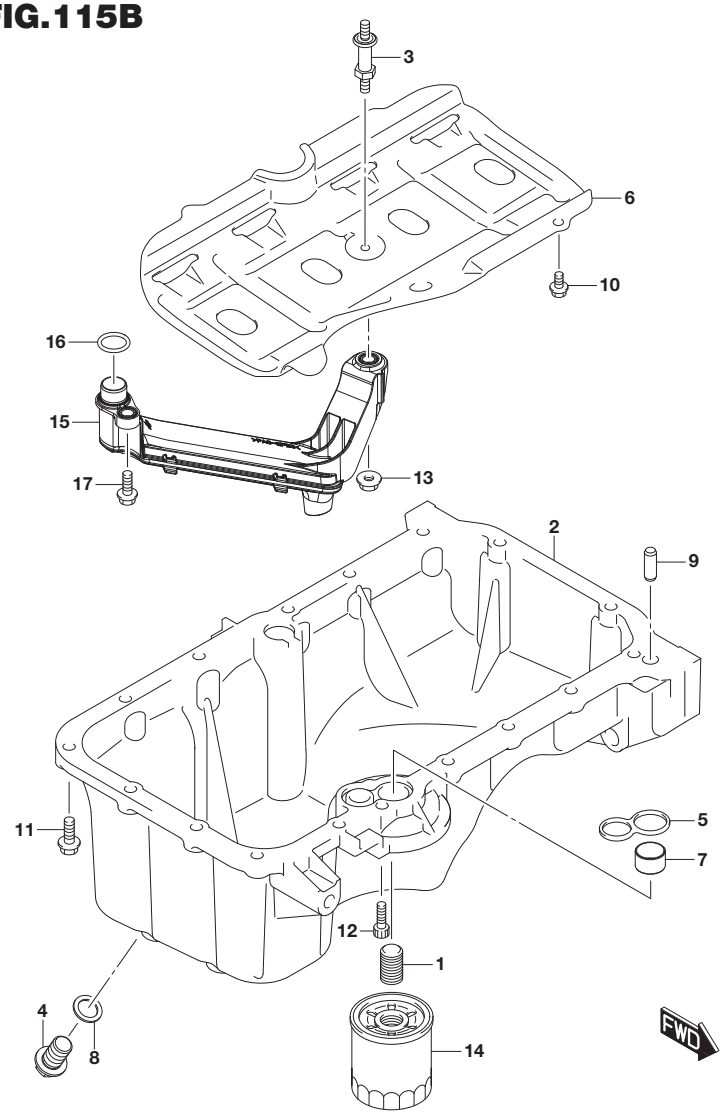

FIG.115B (1-C-2) OIL PAN (K14C)

REF NO.	PART NO.	DESCRIPTION	Q'TY	REMARKS
1	11241-65H02	STAND, OIL FILTER	1	
2	11511-68R01	PAN, OIL	1	
3	11515-51K03	STUD BOLT, OIL PAN BAFFLE	1	
4	11518-63J20	PLUG, OIL DRAIN	1	
5	11518-69J00	O RING, OIL PAN	1	
6	11541-68M00	PLATE, OIL PAN BAFFLE	1	
7	16114-69J00	PIN, OIL PAN DOWEL	1	
8	09168-14015	GASKET (14X20X1.5)	1	
9	09202-08004	PIN (8X23)	1	
10	01550-0612A	BOLT	4	
11	01550-0625C	BOLT	16	
12	07130-0625A	BOLT	1	
13	08316-1006A	NUT	1	
14	16510-82703	FILTER ASSY, OIL (TOKYO ROKI)	1	
15	16520-69L00	STRAINER, OIL PUMP	1	
16	09280-17002	O RING (D:2.4,ID:16.8)	1	
17	07120-0620A	BOLT	1	

APK414-3 P22 115B
OIL PAN (2)

FIG.115C

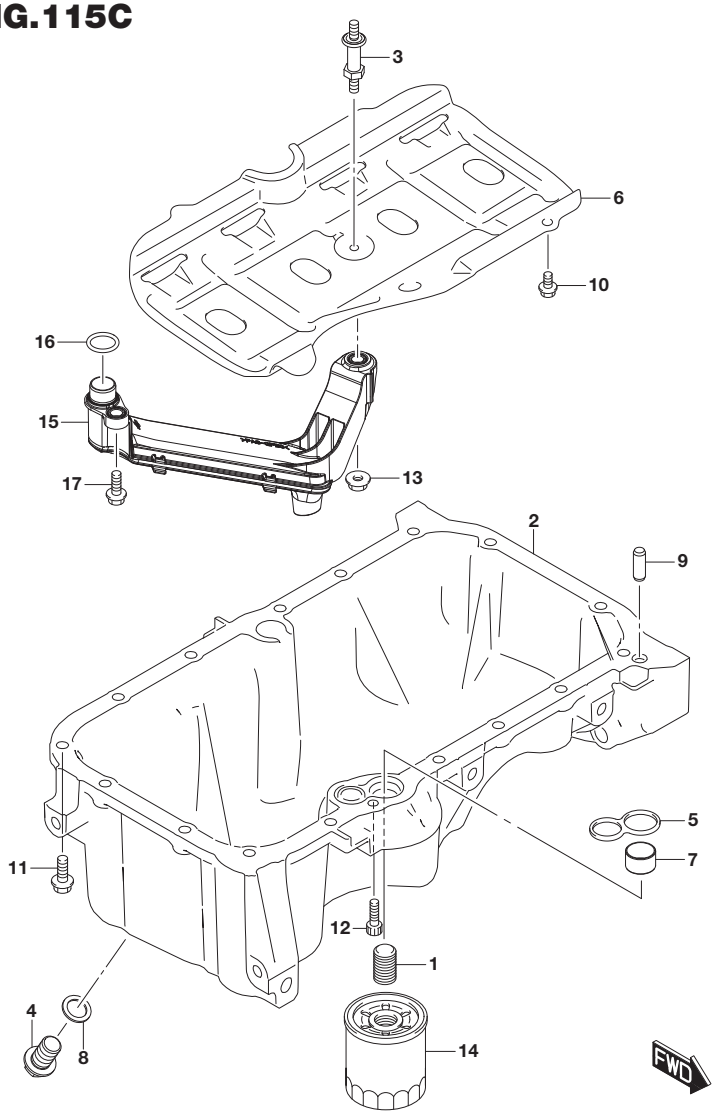

FIG.115C (1-C-3) OIL PAN (K14D)

REF NO.	PART NO.	DESCRIPTION	Q'TY	REMARKS
1	11241-65H02	STAND, OIL FILTER	1	
2	11511-53SA0	PAN, OIL	1	
3	11515-51K03	STUD BOLT, OIL PAN BAFFLE	1	
4	11518-63J20	PLUG, OIL DRAIN	1	
5	11518-69J00	O RING, OIL PAN	1	
6	11541-68M00	PLATE, OIL PAN BAFFLE	1	
7	16114-69J00	PIN, OIL PAN DOWEL	1	
8	09168-14015	GASKET (14X20X1.5)	1	
9	09202-08004	PIN (8X23)	1	
10	01550-0612A	BOLT	4	
11	01550-0625C	BOLT	16	
12	07130-0625A	BOLT	1	
13	08316-1006A	NUT	1	
14	16510-82703	FILTER ASSY, OIL	1	
15	16520-69L00	STRAINER, OIL PUMP	1	
16	09280-17002	O RING (D:2.4,ID:16.8)	1	
17	07120-0620A	BOLT	1	

APK414-3 P22 115C
OIL PAN (3)

FIG.120A

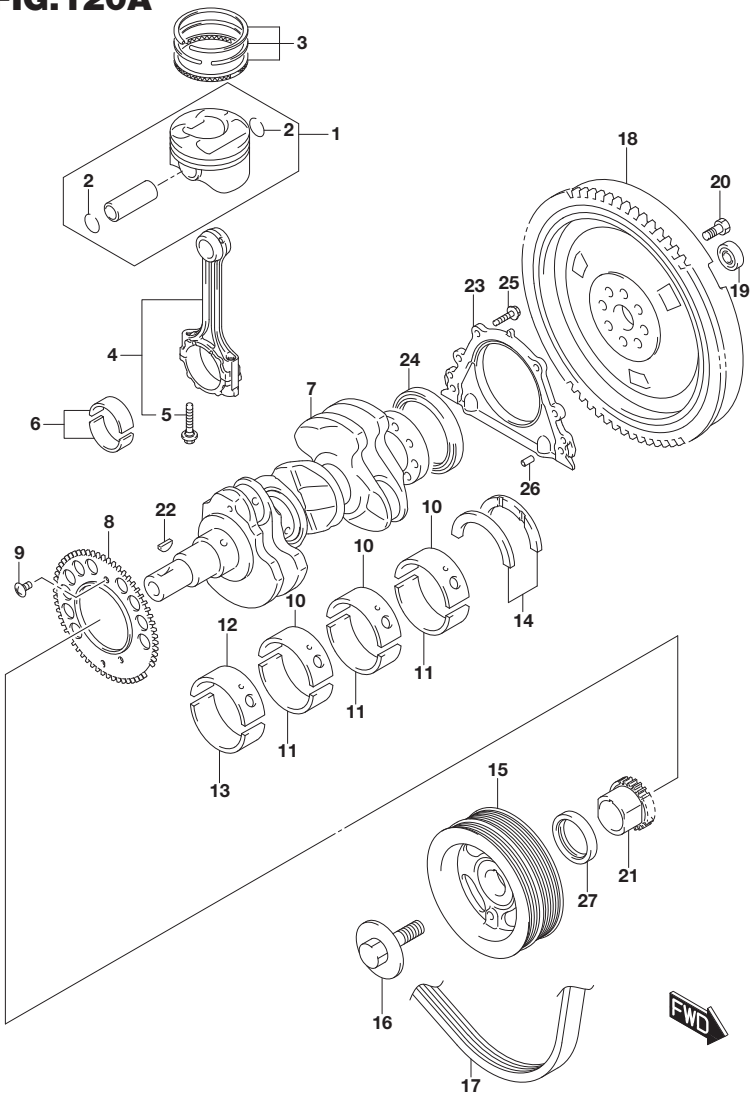

FIG.120A (1-C-4) CRANKSHAFT (K10C)

REF NO.	PART NO.	DESCRIPTION	Q'TY	REMARKS
1	12100-50832	PISTON SET	3	
2	09381-18002	.CIRCLIP (OD:20.5)	6	
3	12140-68MA2	RING SET, PISTON	3	
4	12160-68M02	CONNROD ASSY	3	
5	12163-69J00	.BOLT, CONNROD	6	
6-1	12101-68830-0A0	BEARING SET, CONNROD GREEN (STD,T:1.5)	3	
6-2	12101-68830-0B0	BEARING SET, CONNROD BLACK (STD,T:1.5)	3	
6-3	12101-68830-0C0	BEARING SET, CONNROD NON (STD,T:1.5)	3	
6-4	12101-68830-0D0	BEARING SET, CONNROD YELLOW (STD,T:1.5)	3	
6-5	12101-68830-0E0	BEARING SET, CONNROD BLUE (STD,T:1.5)	3	
6-6	12101-68830-025	BEARING SET, CONNROD RED (US:0.25,T:1.625)	3	
7	12221-50R00	CRANKSHAFT (STD,T:2.5)	1	
8	12222-50R00	PLATE, SENSOR	1	
9	12223-69G00	SCREW, SENSOR PLATE (6X10)	2	
10-1	12341-61P00-0A0	BEARING, CRANK UPR PINK (STD,T:2.0)	3	
10-2	12341-61P00-0B0	BEARING, CRANK UPR PURPLE (STD,T:2.0)	3	
10-3	12341-61P00-0C0	BEARING, CRANK UPR BROWN (STD,T:2.0)	3	
10-4	12341-61P00-0D0	BEARING, CRANK UPR GREEN (STD,T:2.0)	3	
10-5	12341-61P00-0E0	BEARING, CRANK UPR BLACK (STD,T:2.0)	3	
10-6	12341-61P00-0AA	BEARING, CRANK UPR RED/PINK (US:0.25,T:2.125)	3	
10-7	12341-61P00-0BA	BEARING, CRANK UPR RED/PURPLE (US:0.25,T:2.125)	3	
10-8	12341-61P00-0CA	BEARING, CRANK UPR RED/BROWN (US:0.25,T:2.125)	3	

FIG.120A

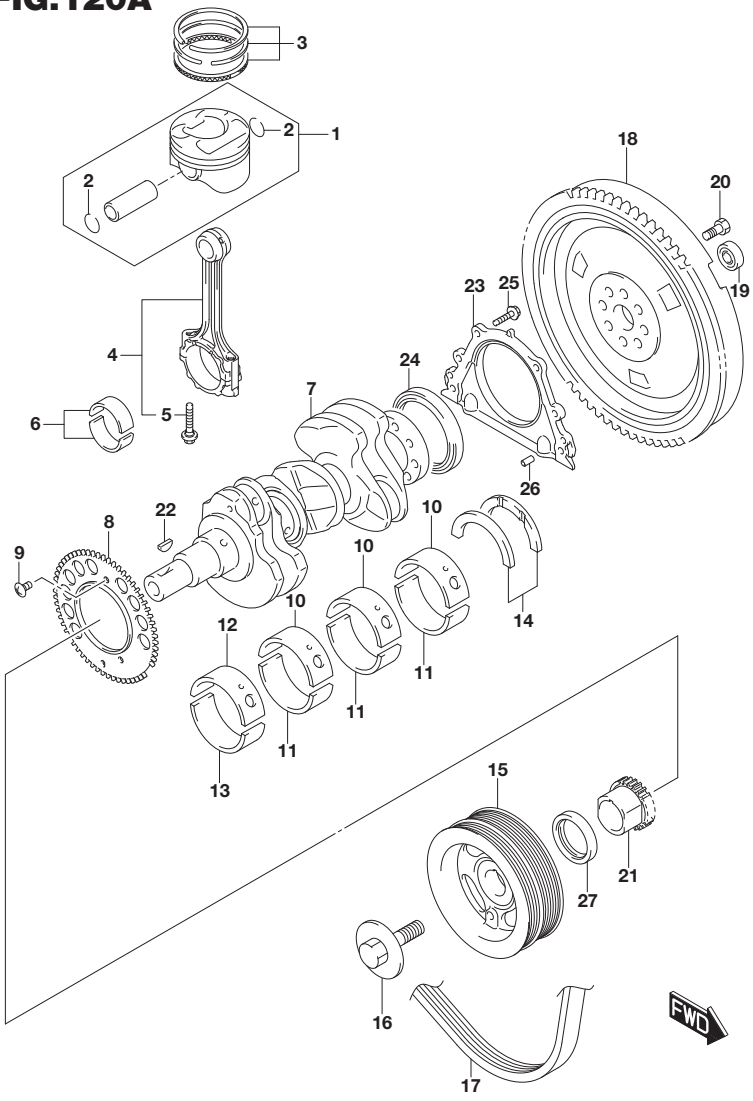

FIG.120A (1-C-5) CRANKSHAFT (K10C)

REF NO.	PART NO.	DESCRIPTION	Q'TY	REMARKS
10-9	12341-61P00-0DA	BEARING, CRANK UPR RED/GREEN (US:0.25,T:2.125)	3	
10-10	12341-61P00-0EA	BEARING, CRANK UPR RED/BLACK (US:0.25,T:2.125)	3	
11-1	12345-71L00-0A0	BEARING, CRANK LWR PINK (STD,T:2.0)	3	
11-2	12345-71L00-0B0	BEARING, CRANK LWR PURPLE (STD,T:2.0)	3	
11-3	12345-71L00-0C0	BEARING, CRANK LWR BROWN (STD,T:2.0)	3	
11-4	12345-71L00-0D0	BEARING, CRANK LWR GREEN (STD,T:2.0)	3	
11-5	12345-71L00-0E0	BEARING, CRANK LWR BLACK (STD,T:2.0)	3	
11-6	12345-71L00-0AA	BEARING, CRANK LWR RED/PINK (US:0.25,T:2.125)	3	
11-7	12345-71L00-0BA	BEARING, CRANK LWR RED/PURPLE (US:0.25,T:2.125)	3	
11-8	12345-71L00-0CA	BEARING, CRANK LWR RED/BROWN (US:0.25,T:2.125)	3	
11-9	12345-71L00-0DA	BEARING, CRANK LWR RED/GREEN (US:0.25,T:2.125)	3	
11-10	12345-71L00-0EA	BEARING, CRANK LWR RED/BLACK (US:0.25,T:2.125)	3	
12-1	12341-71LA0-0A0	BEARING, CRANK UPR PINK (STD,T:2.0)	1	
12-2	12341-71LA0-0B0	BEARING, CRANK UPR PURPLE (STD,T:2.0)	1	
12-3	12341-71LA0-0C0	BEARING, CRANK UPR BROWN (STD,T:2.0)	1	
12-4	12341-71LA0-0D0	BEARING, CRANK UPR GREEN (STD,T:2.0)	1	
12-5	12341-71LA0-0E0	BEARING, CRANK UPR BLACK (STD,T:2.0)	1	
12-6	12341-71LA0-0AA	BEARING, CRANK UPR RED/PINK (US:0.25,T:2.125)	1	

FIG.120A

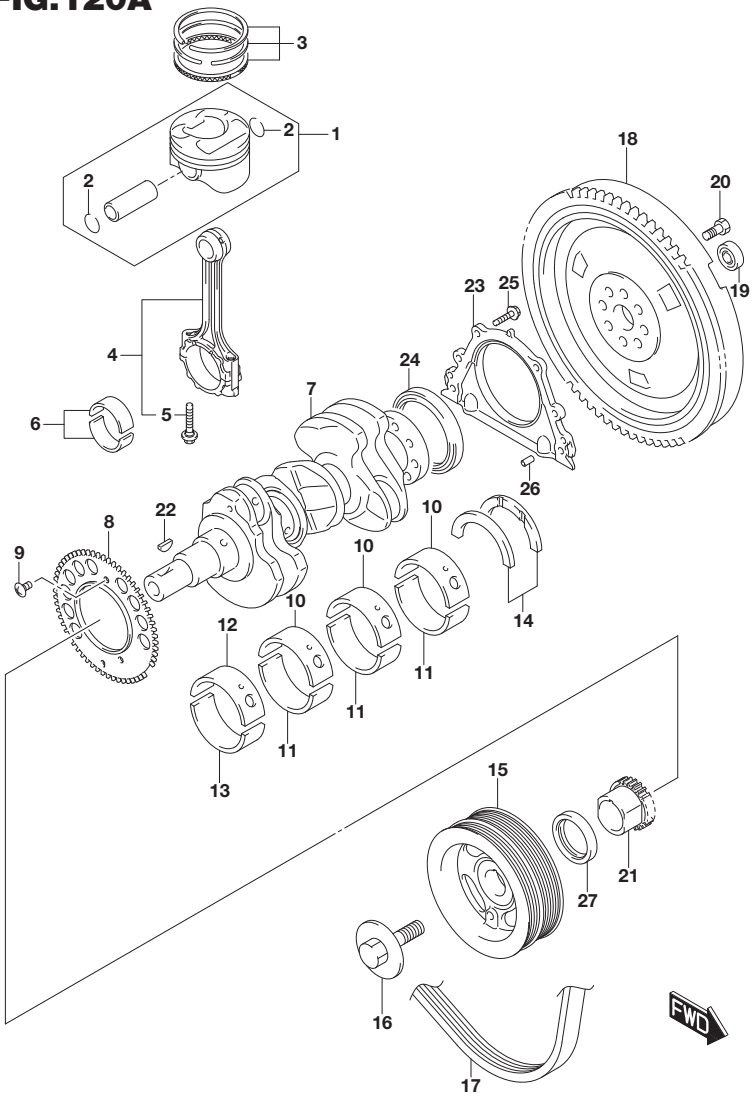

FIG.120A (1-C-6) CRANKSHAFT (K10C)

REF NO.	PART NO.	DESCRIPTION	Q'TY	REMARKS
12-7	12341-71LA0-0BA	BEARING, CRANK UPR RED/PURPLE (US:0.25,T:2.125)	1	
12-8	12341-71LA0-0CA	BEARING, CRANK UPR RED/BROWN (US:0.25,T:2.125)	1	
12-9	12341-71LA0-0DA	BEARING, CRANK UPR RED/GREEN (US:0.25,T:2.125)	1	
12-10	12341-71LA0-0EA	BEARING, CRANK UPR RED/BLACK (US:0.25,T:2.125)	1	
13-1	12345-71L00-0A0	BEARING, CRANK LWR PINK (STD,T:2.0)	1	
13-2	12345-71L00-0B0	BEARING, CRANK LWR PURPLE (STD,T:2.0)	1	
13-3	12345-71L00-0C0	BEARING, CRANK LWR BROWN (STD,T:2.0)	1	
13-4	12345-71L00-0D0	BEARING, CRANK LWR GREEN (STD,T:2.0)	1	
13-5	12345-71L00-0E0	BEARING, CRANK LWR BLACK (STD,T:2.0)	1	
13-6	12345-71L00-0AA	BEARING, CRANK LWR RED/PINK (US:0.25,T:2.125)	1	
13-7	12345-71L00-0BA	BEARING, CRANK LWR RED/PURPLE (US:0.25,T:2.125)	1	
13-8	12345-71L00-0CA	BEARING, CRANK LWR RED/BROWN (US:0.25,T:2.125)	1	
13-9	12345-71L00-0DA	BEARING, CRANK LWR RED/GREEN (US:0.25,T:2.125)	1	
13-10	12345-71L00-0EA	BEARING, CRANK LWR RED/BLACK (US:0.25,T:2.125)	1	
14-1	12300-60840	BEARING SET, CRANK THRUST (STD,T:2.5)	1	
14-2	12300-60840-012	BEARING SET, CRANK THRUST (US:0.125,T:2.563)	1	
15	12610-50R00	PULLEY, CRANKSHAFT	1	
16	12619-69G10	BOLT, CRANK PULLEY (12X37)	1	
17	17521-64R00	BELT, WTR PUMP (7PK969)	1	
18	12620-68M00	FLYWHEEL	1	5MT

FIG.120A

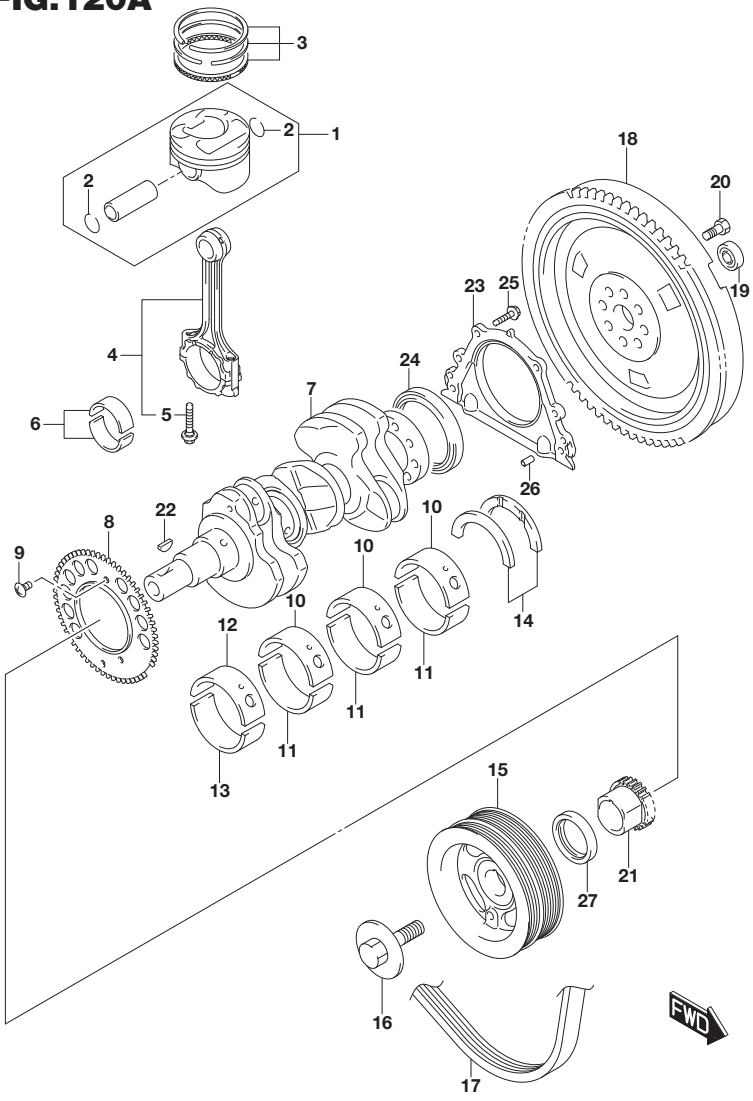

FIG.120A (1-C-7) CRANKSHAFT (K10C)

REF NO.	PART NO.	DESCRIPTION	Q'TY	REMARKS
19	12623-84MA0	BEARING, INPUT SHAFT	1	5MT
20	09103-10440	BOLT (10X18.5)	8	5MT
21	12631-68M00	SPROCKET, CRANKSHAFT TIMING	1	
22	08341-31059	KEY	1	
23	11341-84MA0	HOUSING, OIL SEAL	1	
24	11342-84MB0	OIL SEAL, CRANKSHAFT RR	1	
25	09103-06286	BOLT (6X20)	6	
26	04221-06129	PIN	2	
27	09283-41002	OIL SEAL (41X53X6)	1	

FIG.120B

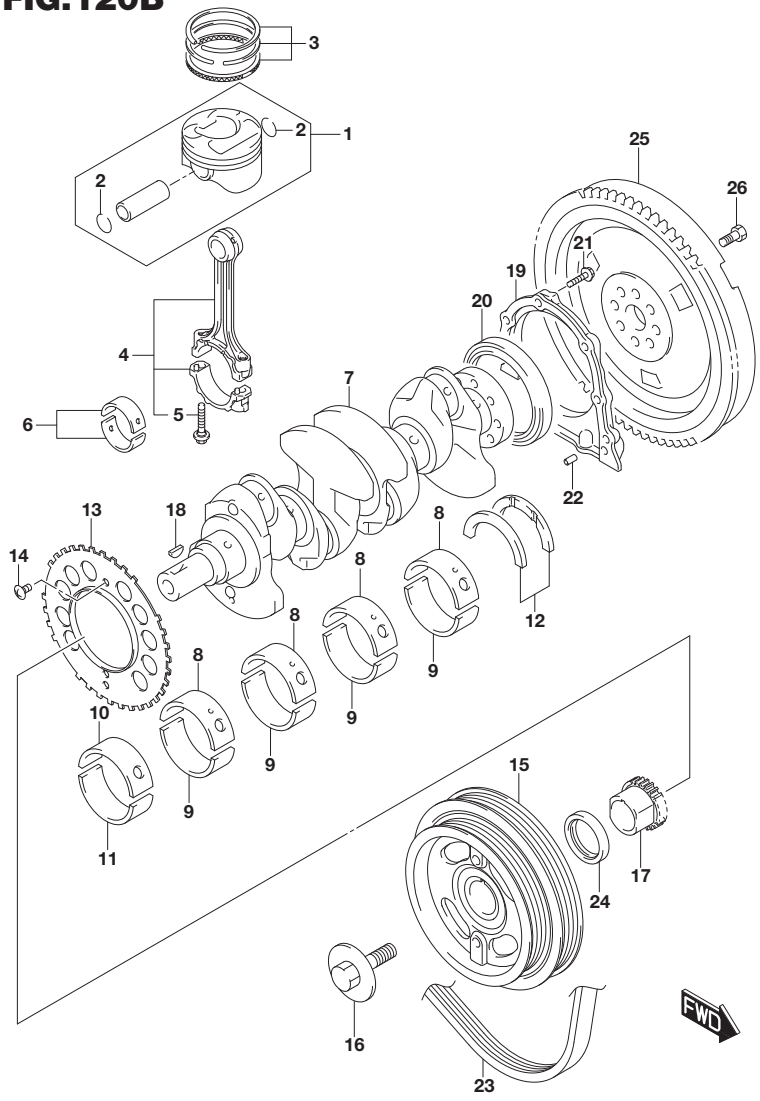

FIG.120B (1-C-8) CRANKSHAFT (K14C)

REF NO.	PART NO.	DESCRIPTION	Q'TY	REMARKS
1-1	12101-68851	PISTON SET	4	TYPE 3
1-2	12101-68860	PISTON SET	4	TYPE 4
2	09381-18002	.CIRCLIP (OD:20.5)	8	
3-1	12140-68MA2	RING SET, PISTON	4	TYPE 3
3-2	12140-68MC0	RING SET, PISTON	4	TYPE 4
4	12160-68M02	CONNROD ASSY	4	
5	12163-69J00	.BOLT, CONNROD	8	
6-1	12101-68830-0A0	BEARING SET, CONNROD GREEN (STD,T:1.5)	4	
6-2	12101-68830-0B0	BEARING SET, CONNROD BLACK (STD,T:1.5)	4	
6-3	12101-68830-0C0	BEARING SET, CONNROD NON (STD,T:1.5)	4	
6-4	12101-68830-0D0	BEARING SET, CONNROD YELLOW (STD,T:1.5)	4	
6-5	12101-68830-0E0	BEARING SET, CONNROD BLUE (STD,T:1.5)	4	
6-6	12101-68830-025	BEARING SET, CONNROD RED (US:0.25,T:1.625)	4	
7	12221-68M00	CRANKSHAFT	1	
8-1	12341-61P00-0A0	BEARING, CRANK UPR PINK (STD,T:2.0)	4	
8-2	12341-61P00-0B0	BEARING, CRANK UPR PURPLE (STD,T:2.0)	4	
8-3	12341-61P00-0C0	BEARING, CRANK UPR BROWN (STD,T:2.0)	4	
8-4	12341-61P00-0D0	BEARING, CRANK UPR GREEN (STD,T:2.0)	4	
8-5	12341-61P00-0E0	BEARING, CRANK UPR BLACK (STD,T:2.0)	4	
8-6	12341-61P00-0AA	BEARING, CRANK UPR RED/PINK (US:0.25,T:2.125)	4	
8-7	12341-61P00-0BA	BEARING, CRANK UPR RED/PURPLE (US:0.25,T:2.125)	4	
8-8	12341-61P00-0CA	BEARING, CRANK UPR RED/BROWN (US:0.25,T:2.125)	4	

FIG.120B

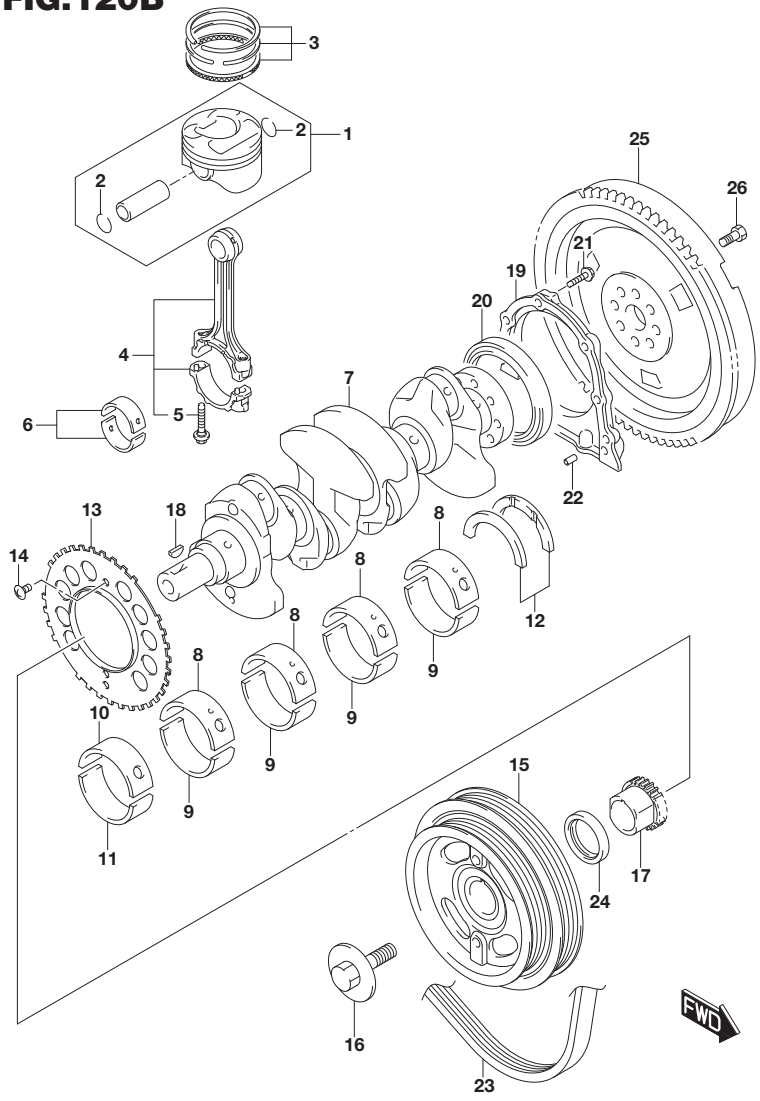

FIG.120B (1-C-9) CRANKSHAFT (K14C)

REF NO.	PART NO.	DESCRIPTION	Q'TY	REMARKS
8-9	12341-61P00-0DA	BEARING, CRANK UPR RED/GREEN (US:0.25,T:2.125)	4	
8-10	12341-61P00-0EA	BEARING, CRANK UPR RED/BLACK (US:0.25,T:2.125)	4	
9-1	12345-71L00-0A0	BEARING, CRANK LWR PINK (STD,T:2.0)	4	
9-2	12345-71L00-0B0	BEARING, CRANK LWR PURPLE (STD,T:2.0)	4	
9-3	12345-71L00-0C0	BEARING, CRANK LWR BROWN (STD,T:2.0)	4	
9-4	12345-71L00-0D0	BEARING, CRANK LWR GREEN (STD,T:2.0)	4	
9-5	12345-71L00-0E0	BEARING, CRANK LWR BLACK (STD,T:2.0)	4	
9-6	12345-71L00-0AA	BEARING, CRANK LWR RED/PINK (US:0.25,T:2.125)	4	
9-7	12345-71L00-0BA	BEARING, CRANK LWR RED/PURPLE (US:0.25,T:2.125)	4	
9-8	12345-71L00-0CA	BEARING, CRANK LWR RED/BROWN (US:0.25,T:2.125)	4	
9-9	12345-71L00-0DA	BEARING, CRANK LWR RED/GREEN (US:0.25,T:2.125)	4	
9-10	12345-71L00-0EA	BEARING, CRANK LWR RED/BLACK (US:0.25,T:2.125)	4	
10-1	12341-71LA0-0A0	BEARING, CRANK UPR PINK (STD,T:2.0)	1	
10-2	12341-71LA0-0B0	BEARING, CRANK UPR PURPLE (STD,T:2.0)	1	
10-3	12341-71LA0-0C0	BEARING, CRANK UPR BROWN (STD,T:2.0)	1	
10-4	12341-71LA0-0D0	BEARING, CRANK UPR GREEN (STD,T:2.0)	1	
10-5	12341-71LA0-0E0	BEARING, CRANK UPR BLACK (STD,T:2.0)	1	
10-6	12341-71LA0-0AA	BEARING, CRANK UPR RED/PINK (US:0.25,T:2.125)	1	

FIG.120B

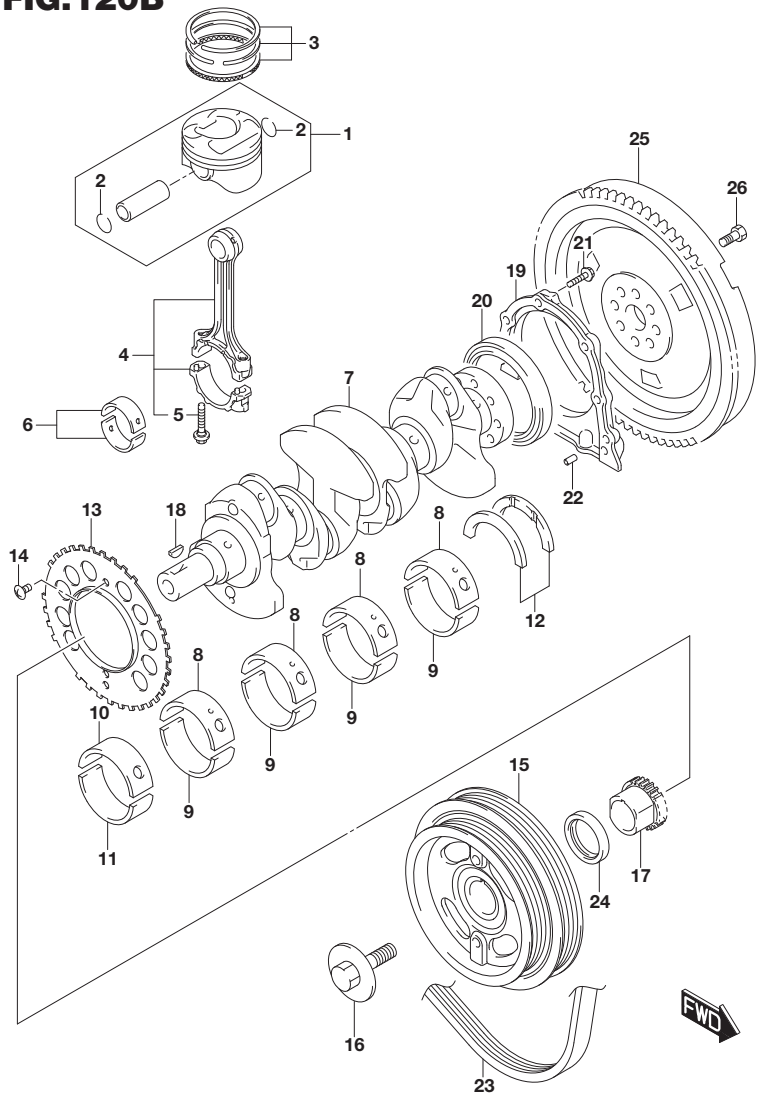

FIG.120B (1-C-10) CRANKSHAFT (K14C)

REF NO.	PART NO.	DESCRIPTION	Q'TY	REMARKS
10-7	12341-71LA0-0BA	BEARING, CRANK UPR RED/PURPLE (US:0.25,T:2.125)	1	
10-8	12341-71LA0-0CA	BEARING, CRANK UPR RED/BROWN (US:0.25,T:2.125)	1	
10-9	12341-71LA0-0DA	BEARING, CRANK UPR RED/GREEN (US:0.25,T:2.125)	1	
10-10	12341-71LA0-0EA	BEARING, CRANK UPR RED/BLACK (US:0.25,T:2.125)	1	
11-1	12345-71L00-0A0	BEARING, CRANK LWR PINK (STD,T:2.0)	1	
11-2	12345-71L00-0B0	BEARING, CRANK LWR PURPLE (STD,T:2.0)	1	
11-3	12345-71L00-0C0	BEARING, CRANK LWR BROWN (STD,T:2.0)	1	
11-4	12345-71L00-0D0	BEARING, CRANK LWR GREEN (STD,T:2.0)	1	
11-5	12345-71L00-0E0	BEARING, CRANK LWR BLACK (STD,T:2.0)	1	
11-6	12345-71L00-0AA	BEARING, CRANK LWR RED/PINK (US:0.25,T:2.125)	1	
11-7	12345-71L00-0BA	BEARING, CRANK LWR RED/PURPLE (US:0.25,T:2.125)	1	
11-8	12345-71L00-0CA	BEARING, CRANK LWR RED/BROWN (US:0.25,T:2.125)	1	
11-9	12345-71L00-0DA	BEARING, CRANK LWR RED/GREEN (US:0.25,T:2.125)	1	
11-10	12345-71L00-0EA	BEARING, CRANK LWR RED/BLACK (US:0.25,T:2.125)	1	
12-1	12300-60840	BEARING SET, CRANK THRUST (STD,T:2.5)	1	
12-2	12300-60840-012	BEARING SET, CRANK THRUST (US:0.125,T:2.563)	1	
13	12222-68M00	PLATE, SENSOR	1	
14	12223-69G00	SCREW, SENSOR PLATE (6X10)	2	
15	12610-68M00	PULLEY, CRANKSHAFT	1	
16	12619-69G10	BOLT, CRANK PULLEY (12X37)	1	

FIG.120B

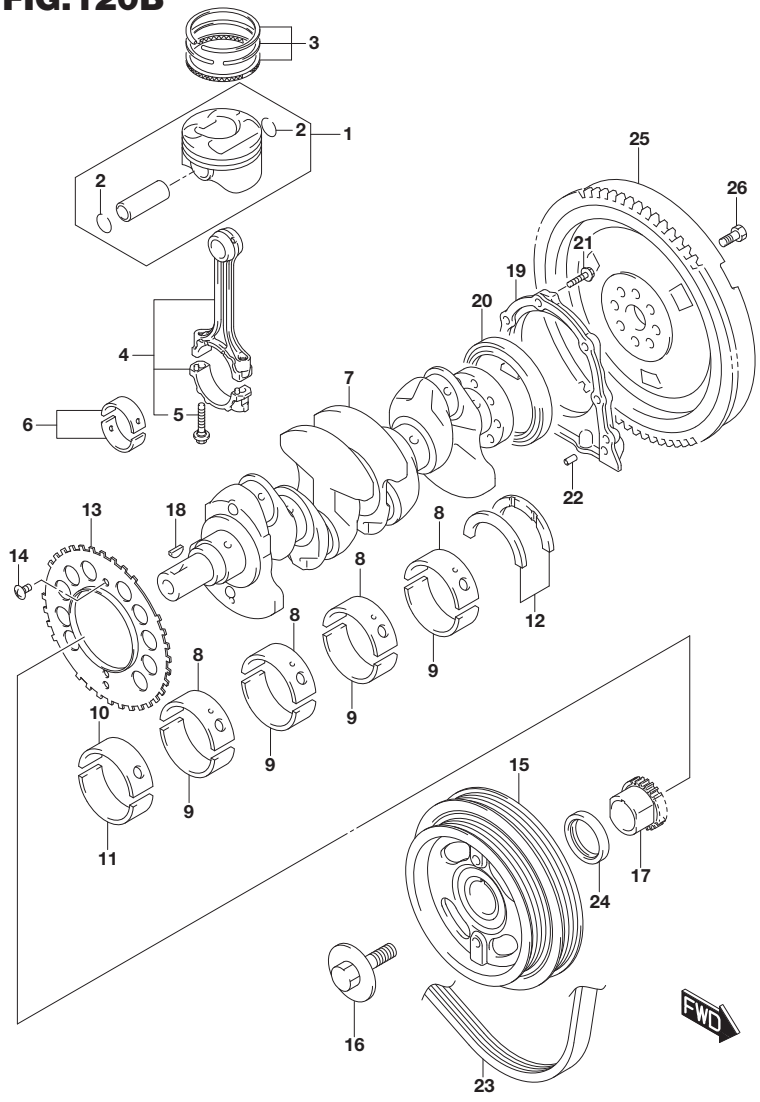

FIG.120B (1-C-11) CRANKSHAFT (K14C)

REF NO.	PART NO.	DESCRIPTION	Q'TY	REMARKS
17	12631-68M00	SPROCKET, CRANKSHAFT TIMING	1	
18	08341-31059	KEY	1	
19	11341-84MA0	HOUSING, OIL SEAL	1	
20	11342-84MB0	OIL SEAL, CRANKSHAFT RR	1	
21	09103-06286	BOLT (6X20)	6	
22	04221-06129	PIN	2	
23	17521-61MA0	BELT, WTR PUMP (5PK969)	1	
24	09283-41002	OIL SEAL (41X53X6)	1	
25	12620-68M00	FLYWHEEL	1	6MT
26	09103-10440	BOLT (10X18.5)	8	6MT

FIG.120C

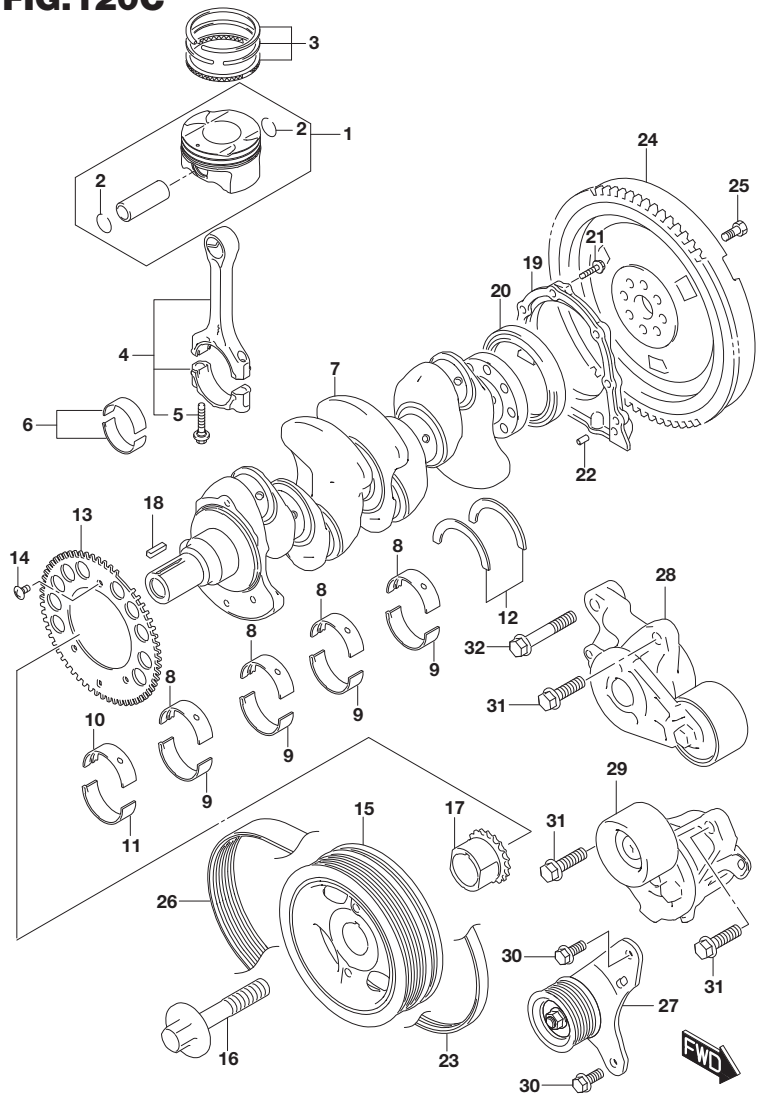

FIG.120C (1-C-12) CRANKSHAFT (K14D)

REF NO.	PART NO.	DESCRIPTION	Q'TY	REMARKS
1	12101-53810	PISTON SET	4	
2	09381-19001	.RING	8	
3	12140-53SA0	RING SET, PISTON	4	
4	12160-53SA0	CONNROD ASSY	4	
5	12163-69J00	.BOLT, CONNROD	8	
6-1	12101-68830-0A0	BEARING SET, CONNROD GREEN (STD,T:1.5)	4	
6-2	12101-68830-0B0	BEARING SET, CONNROD BLACK (STD,T:1.5)	4	
6-3	12101-68830-0C0	BEARING SET, CONNROD NON (STD,T:1.5)	4	
6-4	12101-68830-0D0	BEARING SET, CONNROD YELLOW (STD,T:1.5)	4	
6-5	12101-68830-0E0	BEARING SET, CONNROD BLUE (STD,T:1.5)	4	
6-6	12101-68830-025	BEARING SET, CONNROD RED (US:0.25,T:1.625)	4	
7	12221-53SA0	CRANKSHAFT	1	
8-1	12341-53SA0-0A0	BEARING, CRANK UPR PINK (STD,T:2.0)	4	
8-2	12341-53SA0-0B0	BEARING, CRANK UPR PURPLE (STD,T:2.0)	4	
8-3	12341-53SA0-0C0	BEARING, CRANK UPR BROWN (STD,T:2.0)	4	
8-4	12341-53SA0-0D0	BEARING, CRANK UPR GREEN (STD,T:2.0)	4	
8-5	12341-53SA0-0E0	BEARING, CRANK UPR BLACK (STD,T:2.0)	4	
8-6	12341-53SA0-0W0	BEARING, CRANK UPR YELLOW (STD,T:2.0)	4	
8-7	12341-53SA0-0Y0	BEARING, CRANK UPR BLUE (STD,T:2.0)	4	
8-8	12341-53SA0-0Z0	BEARING, CRANK UPR RED (STD,T:2.0)	4	
8-9	12341-53SA0-0AA	BEARING, CRANK UPR RED/PINK (US:0.25,T:2.125)	4	

FIG.120C

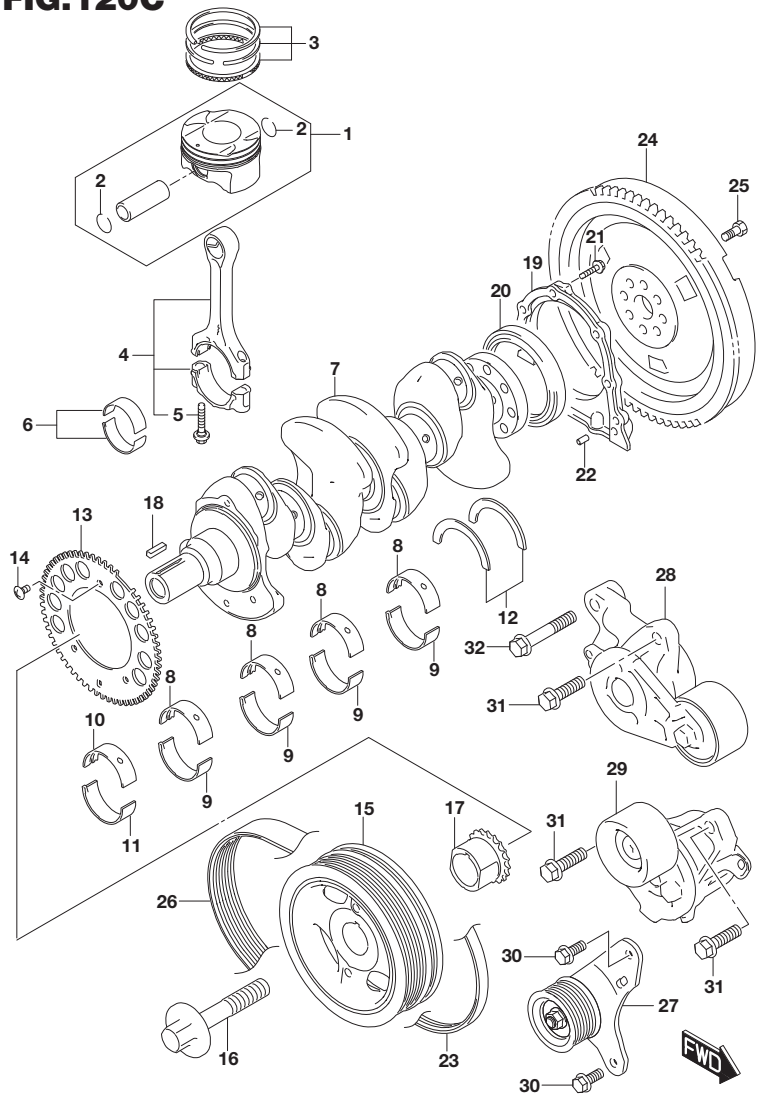

FIG.120C (1-C-13) CRANKSHAFT (K14D)

REF NO.	PART NO.	DESCRIPTION	Q'TY	REMARKS
8-10	12341-53SA0-0BA	BEARING, CRANK UPR RED/PURPLE (US:0.25,T:2.125)	4	
8-11	12341-53SA0-0CA	BEARING, CRANK UPR RED/BROWN (US:0.25,T:2.125)	4	
8-12	12341-53SA0-0DA	BEARING, CRANK UPR RED/GREEN (US:0.25,T:2.125)	4	
8-13	12341-53SA0-0EA	BEARING, CRANK UPR RED/BLACK (US:0.25,T:2.125)	4	
8-14	12341-53SA0-0WA	BEARING, CRANK UPR RED/YELLOW (US:0.25,T:2.125)	4	
8-15	12341-53SA0-0YA	BEARING, CRANK UPR RED/BLUE (US:0.25,T:2.125)	4	
8-16	12341-53SA0-0ZA	BEARING, CRANK UPR RED/RED (US:0.25,T:2.125)	4	
9-1	12345-53SA0-0A0	BEARING, CRANK LWR PINK (STD,T:2.0)	4	
9-2	12345-53SA0-0B0	BEARING, CRANK LWR PURPLE (STD,T:2.0)	4	
9-3	12345-53SA0-0C0	BEARING, CRANK LWR BROWN (STD,T:2.0)	4	
9-4	12345-53SA0-0D0	BEARING, CRANK LWR GREEN (STD,T:2.0)	4	
9-5	12345-53SA0-0E0	BEARING, CRANK LWR BLACK (STD,T:2.0)	4	
9-6	12345-53SA0-0F0	BEARING, CRANK LWR RED (STD,T:2.0)	4	
9-7	12345-53SA0-0G0	BEARING, CRANK LWR BLUE (STD,T:2.0)	4	
9-8	12345-53SA0-0H0	BEARING, CRANK LWR YELLOW (STD,T:2.0)	4	
9-9	12345-53SA0-0AA	BEARING, CRANK LWR RED/PINK (US:0.25,T:2.15)	4	
9-10	12345-53SA0-0BA	BEARING, CRANK LWR RED/PURPLE (US:0.25,T:2.15)	4	
9-11	12345-53SA0-0CA	BEARING, CRANK LWR RED/BROWN (US:0.25,T:2.15)	4	

FIG.120C

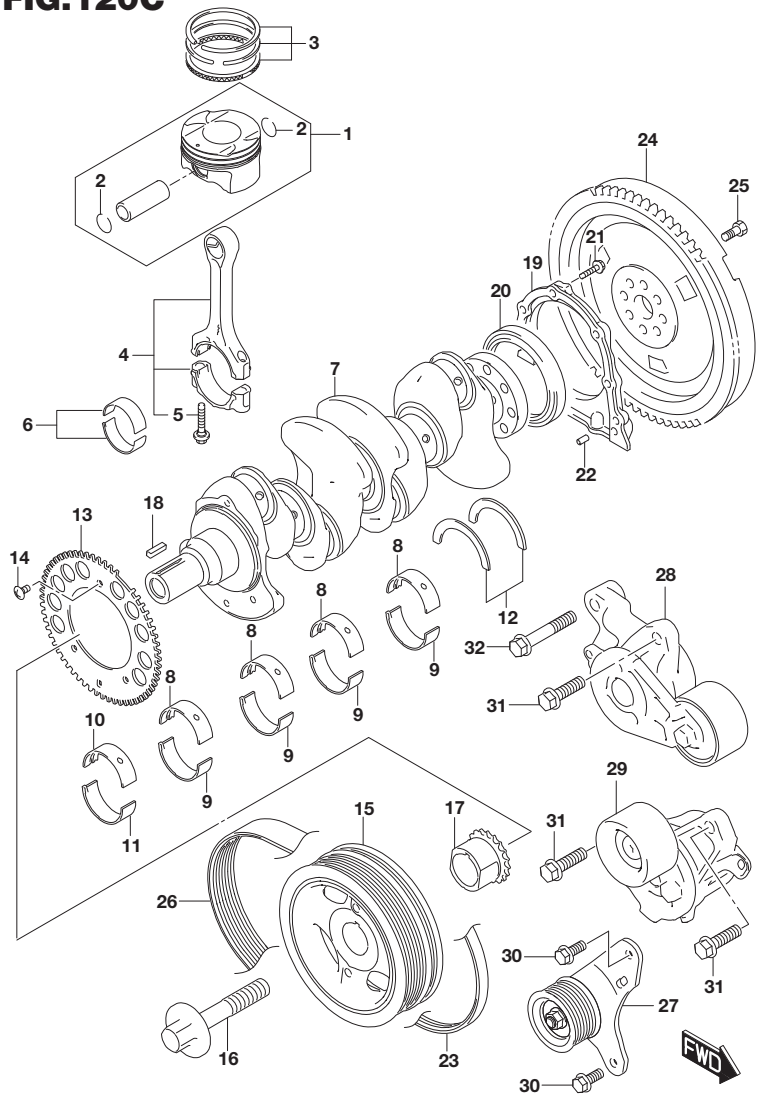

FIG.120C (1-C-14) CRANKSHAFT (K14D)

REF NO.	PART NO.	DESCRIPTION	Q'TY	REMARKS
9-12	12345-53SA0-0DA	BEARING, CRANK LWR RED/GREEN (US:0.25,T:2.15)	4	
9-13	12345-53SA0-0EA	BEARING, CRANK LWR RED/BLACK (US:0.25,T:2.15)	4	
9-14	12345-53SA0-0FA	BEARING, CRANK LWR RED/RED (US:0.25,T:2.15)	4	
9-15	12345-53SA0-0GA	BEARING, CRANK LWR RED/BLUE (US:0.25,T:2.15)	4	
9-16	12345-53SA0-0HA	BEARING, CRANK LWR RED/YELLOW (US:0.25,T:2.15)	4	
10-1	12341-62R70-0A0	BEARING, CRANK UPR PURPLE (STD,T:2.0)	1	
10-2	12341-62R70-0B0	BEARING, CRANK UPR BROWN (STD,T:2.0)	1	
10-3	12341-62R70-0C0	BEARING, CRANK UPR GREEN (STD,T:2.0)	1	
10-4	12341-62R70-0D0	BEARING, CRANK UPR BLACK (STD,T:2.0)	1	
10-5	12341-62R70-0E0	BEARING, CRANK UPR NON (STD,T:2.0)	1	
10-6	12341-62R70-0AA	BEARING, CRANK UPR WHITE/PURPLE (US:0.25,T:2.15)	1	
10-7	12341-62R70-0BA	BEARING, CRANK UPR WHITE/BROWN (US:0.25,T:2.15)	1	
10-8	12341-62R70-0CA	BEARING, CRANK UPR WHITE/GREEN (US:0.25,T:2.15)	1	
10-9	12341-62R70-0DA	BEARING, CRANK UPR WHITE/BLACK (US:0.25,T:2.15)	1	
10-10	12341-62R70-0EA	BEARING, CRANK UPR WHITE (US:0.25,T:2.15)	1	

FIG.120C

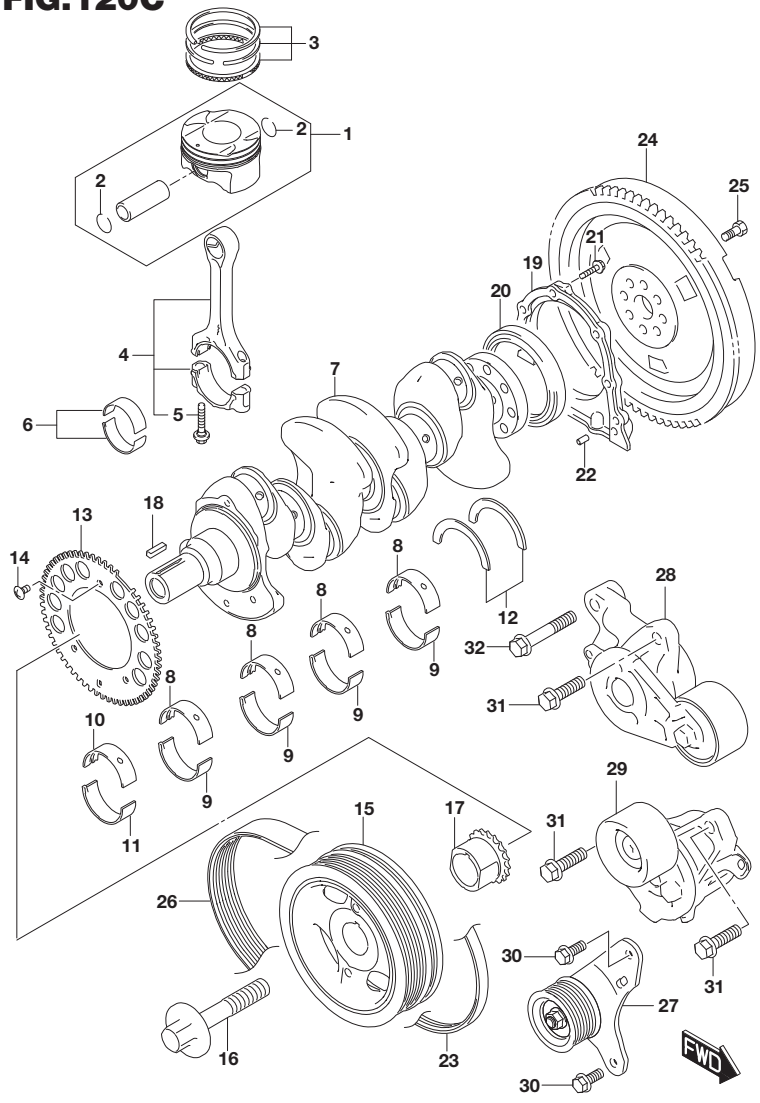

FIG.120C (1-C-15) CRANKSHAFT (K14D)

REF NO.	PART NO.	DESCRIPTION	Q'TY	REMARKS
11-1	12345-62R70-0A0	BEARING, CRANK LWR PURPLE (STD,T:2.0)	1	
11-2	12345-62R70-0B0	BEARING, CRANK LWR BROWN (STD,T:2.0)	1	
11-3	12345-62R70-0C0	BEARING, CRANK LWR GREEN (STD,T:2.0)	1	
11-4	12345-62R70-0D0	BEARING, CRANK LWR BLACK (STD,T:2.0)	1	
11-5	12345-62R70-0E0	BEARING, CRANK LWR NON (STD,T:2.0)	1	
11-6	12345-62R70-0AA	BEARING, CRANK LWR WHITE/PURPLE (US:0.25,T:2.15)	1	
11-7	12345-62R70-0BA	BEARING, CRANK LWR WHITE/BROWN (US:0.25,T:2.15)	1	
11-8	12345-62R70-0CA	BEARING, CRANK LWR WHITE/GREEN (US:0.25,T:2.15)	1	
11-9	12345-62R70-0DA	BEARING, CRANK LWR WHITE/BLACK (US:0.25,T:2.15)	1	
11-10	12345-62R70-0EA	BEARING, CRANK LWR WHITE (US:0.25,T:2.15)	1	
12-1	12300-53810	BEARING SET, CRANK THRUST (STD,T:2.5)	1	
12-2	12300-53810-012	BEARING SET, CRANK THRUST US (US:0.125,T:2.563)	1	
13	12222-53SA0	PLATE, SENSOR	1	
14	12223-69G00	SCREW, SENSOR PLATE (6X10)	3	
15	12610-53S00	PULLEY, CRANKSHAFT	1	
16	12619-53SA0	BOLT, CRANK PULLEY	1	
17	12631-53SA0	SPROCKET, CRANKSHAFT TIMING	1	
18	09421-05009	KEY	1	
19	11341-84MA0	HOUSING, OIL SEAL	1	
20	11342-84MC0	OIL SEAL, CRANKSHAFT REAR	1	
21	09103-06286	BOLT (6X20)	6	
22	04221-06129	PIN	2	
23	17521-53SA0	BELT, WTR PUMP	1	
24	12620-68M00	FLYWHEEL	1	

FIG.120C

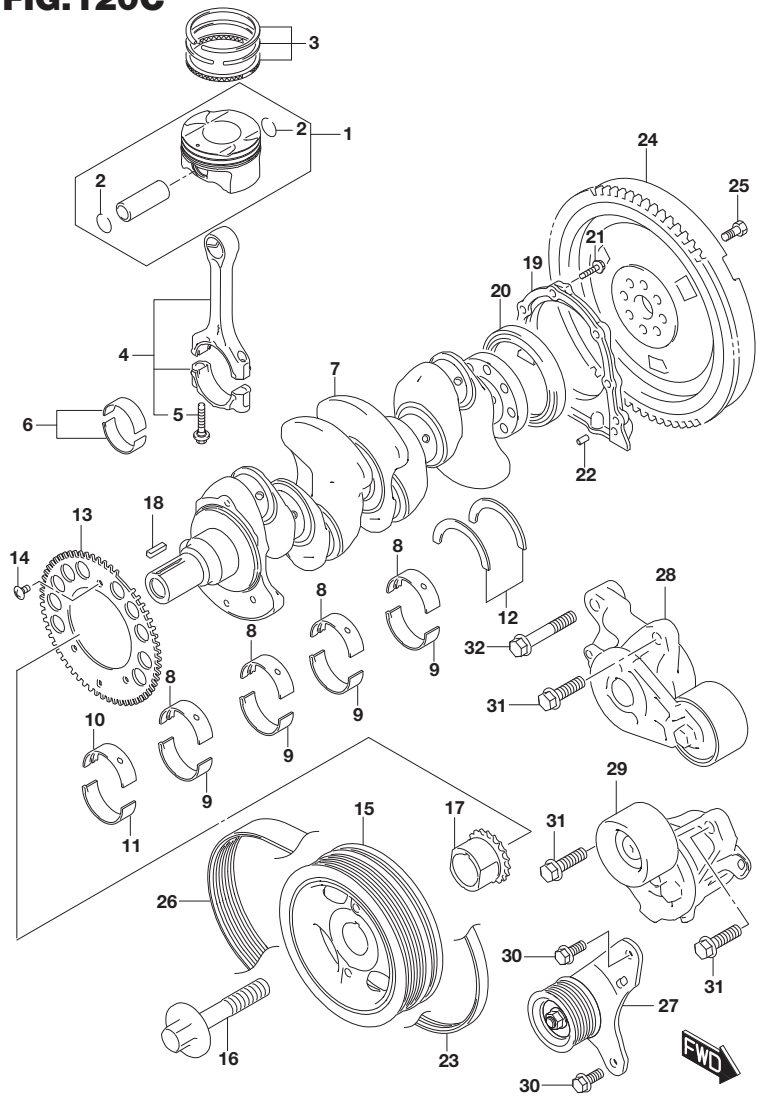

FIG.120C (1-D-2) CRANKSHAFT (K14D)

REF NO.	PART NO.	DESCRIPTION	Q'TY	REMARKS
25	09103-10440	BOLT (10X18.5)	8	
26	17522-53S00	BELT, GENERATOR	1	
27	17530-53SA0	PULLEY, GEN BELT IDLER	1	
28	17540-53S00	TENSIONER ASSY, GEN BELT UPPER	1	
29	17540-53S10	TENSIONER ASSY, GEN BELT LOWER	1	
30	01550-0820C	BOLT	2	
31	01550-1035A	BOLT	3	
32	01550-1060A	BOLT	1	

FIG.122A

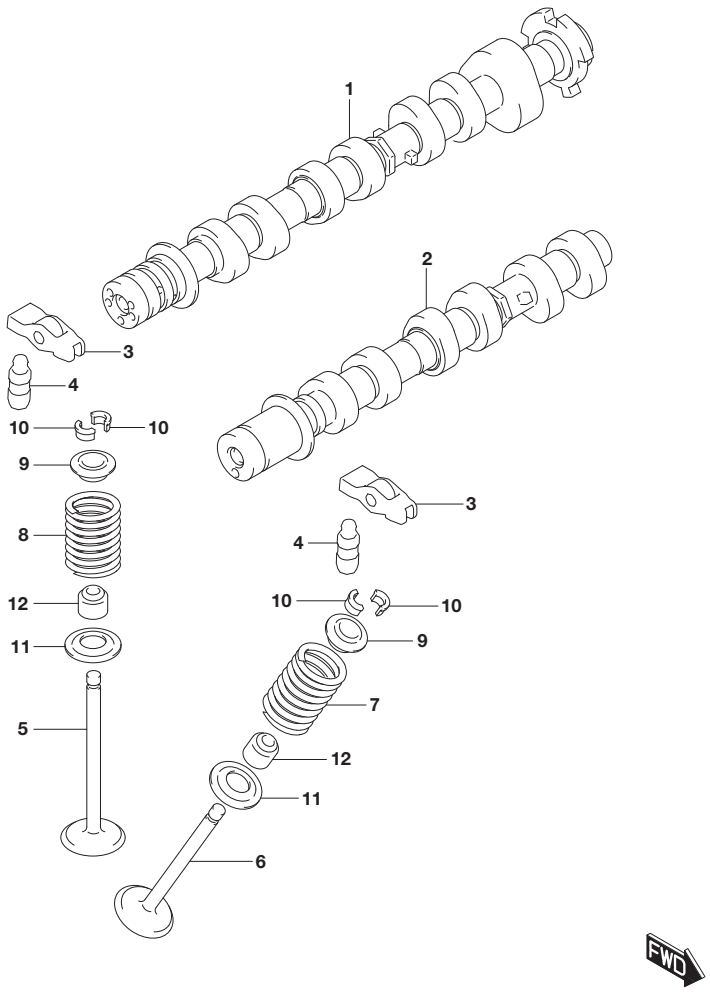

FIG.122A (1-D-3) CAM SHAFT/VALVE (K10C)

REF NO.	PART NO.	DESCRIPTION	Q'TY	REMARKS
1	12710-50R00	CAMSHAFT, INTK	1	
2	12721-50R00	CAMSHAFT, EXH	1	
3	12840-84MA0	ARM, VALVE ROCKER	12	
4	12860-84MA0	ADJUSTER, HYDR VALVE LASH	12	
5	12911-68M00	VALVE, INTK	6	
6	12915-68M10	VALVE, EXH	6	
7	12921-68M00	SPRING, VALVE	6	
8	12921-84MA0	SPRING, VALVE	6	
9	12931-69L00	RETAINER, VALVE SPRING	12	
10	12932-24F00	COTTER, VALVE	24	
11	12933-84MA0	SEAT, VALVE SPRING	12	
12	12934-68M00	SEAL, VALVE STEM	12	

FIG.122B

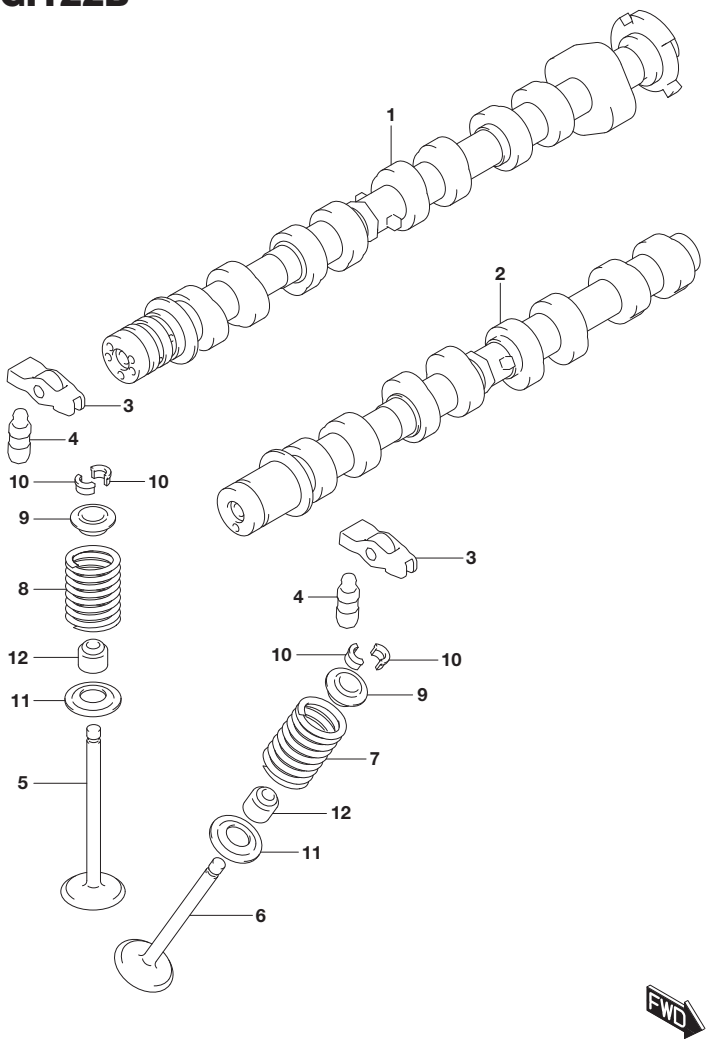

FIG.122B (1-D-4) CAM SHAFT/VALVE (K14C)

REF NO.	PART NO.	DESCRIPTION	Q'TY	REMARKS
1	12710-68M00	CAMSHAFT, INTK	1	
2	12721-68M00	CAMSHAFT, EXH	1	
3-1	12840-84MA0	ARM, VALVE ROCKER	16	TYPE 3
3-2	12840-53S00	ARM, VALVE ROCKER	16	TYPE 4
4	12860-84MA0	ADJUSTER, HYDR VALVE LASH	16	
5	12911-68M00	VALVE, INTK	8	
6	12915-68M10	VALVE, EXH	8	
7	12921-68M00	SPRING, VALVE	8	
8	12921-84MA0	SPRING, VALVE	8	
9	12931-69L00	RETAINER, VALVE SPRING	16	
10	12932-24F00	COTTER, VALVE	32	
11	12933-84MA0	SEAT, VALVE SPRING	16	
12	12934-68M00	SEAL, VALVE STEM	16	

FIG.122C

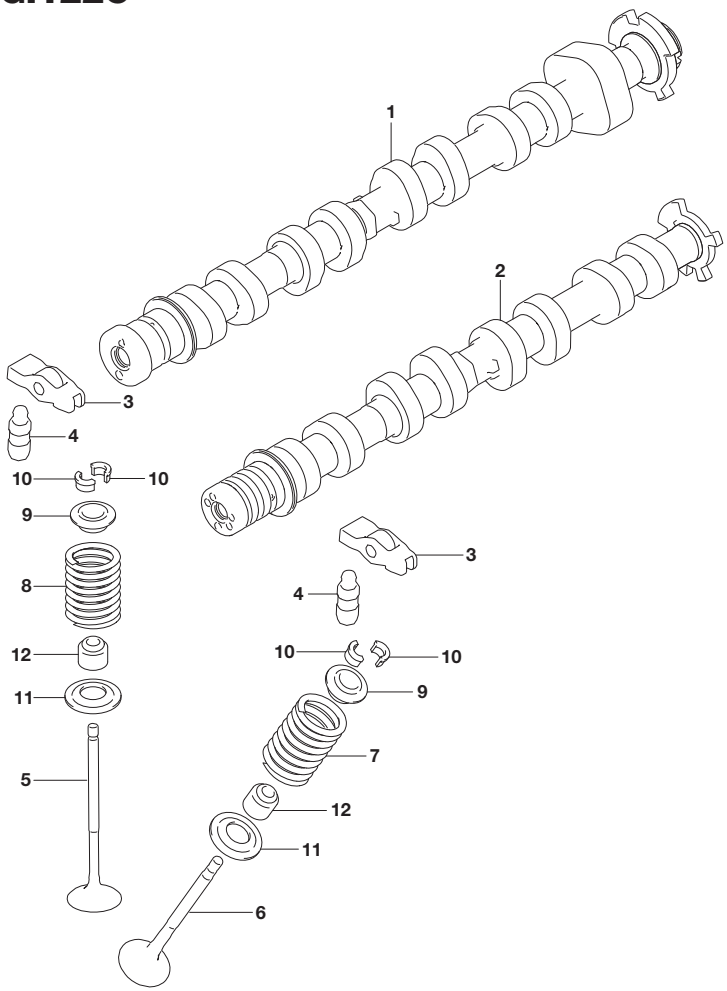

FIG.122C (1-D-5) CAM SHAFT/VALVE (K14D)

REF NO.	PART NO.	DESCRIPTION	Q'TY	REMARKS
1	12710-53SA0	CAMSHAFT, INTK	1	
2	12720-53SA0	CAMSHAFT, EXH	1	
3	12840-53S00	ARM, VALVE ROCKER	16	
4	12860-84MA0	ADJUSTER, HYDR VALVE LASH	16	
5	12911-53SA0	VALVE, INTK	8	
6	12915-53SA0	VALVE, EXH	8	
7	12921-68M00	SPRING, VALVE	8	
8	12921-84MA0	SPRING, VALVE	8	
9	12931-69L00	RETAINER, VALVE SPRING	16	
10	12932-24F00	COTTER, VALVE	32	
11	12933-84MA0	SEAT, VALVE SPRING	16	
12	12934-68M00	SEAL, VALVE STEM	16	

FIG.124A

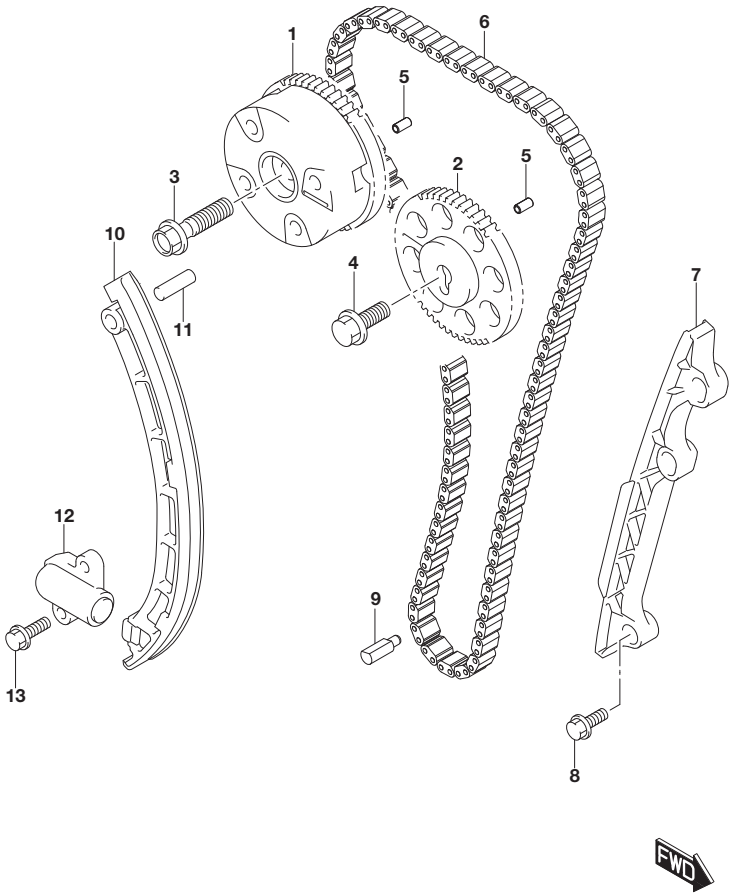

FIG.124A (1-D-6) CAM CHAIN (K10C)

REF NO.	PART NO.	DESCRIPTION	Q'TY	REMARKS
1	12740-68M00	SPROCKET ASSY, CAMSHAFT TIMING	1	
2	12742-68M00	SPROCKET, CAMSHAFT TIMING EXH	1	
3	12753-69L00	BOLT, CAMSHAFT SPROCKET (10X41)	1	
4	09103-10189	BOLT (10X23)	1	
5	09206-05001	PIN (3.4X5X10)	2	
6	12761-68M00	CHAIN, TIMING	1	
7	12771-68M00	GUIDE, TIMING CHAIN	1	
8	12776-68M00	BOLT, TIMING CHAIN GUIDE	3	
9	12781-69G00	JET, TIMING CHAIN	1	
10	12811-68M00	TENSIONER, TIMING CHAIN	1	
11	12812-50M00	PIN, TIMING CHAIN TENSIONER FIX	1	
12	12831-68M00	ADJUSTER ASSY, TENSIONER	1	
13	01550-0620A	BOLT	2	

FIG.124B

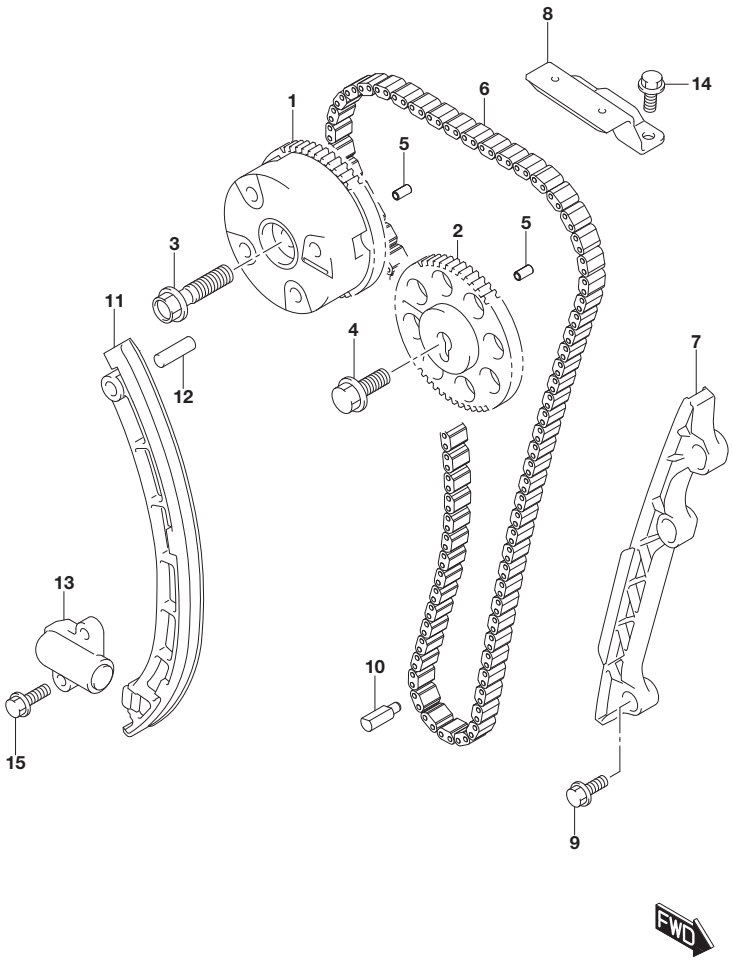

FIG.124B (1-D-7) CAM CHAIN (K14C)

REF NO.	PART NO.	DESCRIPTION	Q'TY	REMARKS
1	12740-68M00	SPROCKET ASSY, CAMSHAFT TIMING	1	
2	12742-68M00	SPROCKET, CAMSHAFT TIMING EXH	1	
3	12753-69L00	BOLT, CAMSHAFT SPROCKET (10X41)	1	
4	09103-10189	BOLT (10X23)	1	
5	09206-05001	PIN (3.4X5X10)	2	
6	12761-68M00	CHAIN, TIMING	1	
7	12771-68M00	GUIDE, TIMING CHAIN	1	
8	12772-68M00	GUIDE, TIMING CHAIN NO.2	1	
9	12776-68M00	BOLT, TIMING CHAIN GUIDE	3	
10	12781-69G00	JET, TIMING CHAIN	1	
11	12811-68M00	TENSIONER, TIMING CHAIN	1	
12	12812-50M00	PIN, TIMING CHAIN TENSIONER FIX	1	
13	12831-68M00	ADJUSTER ASSY, TENSIONER	1	
14	01550-0616A	BOLT	2	
15	01550-0620A	BOLT	2	

FIG.124C

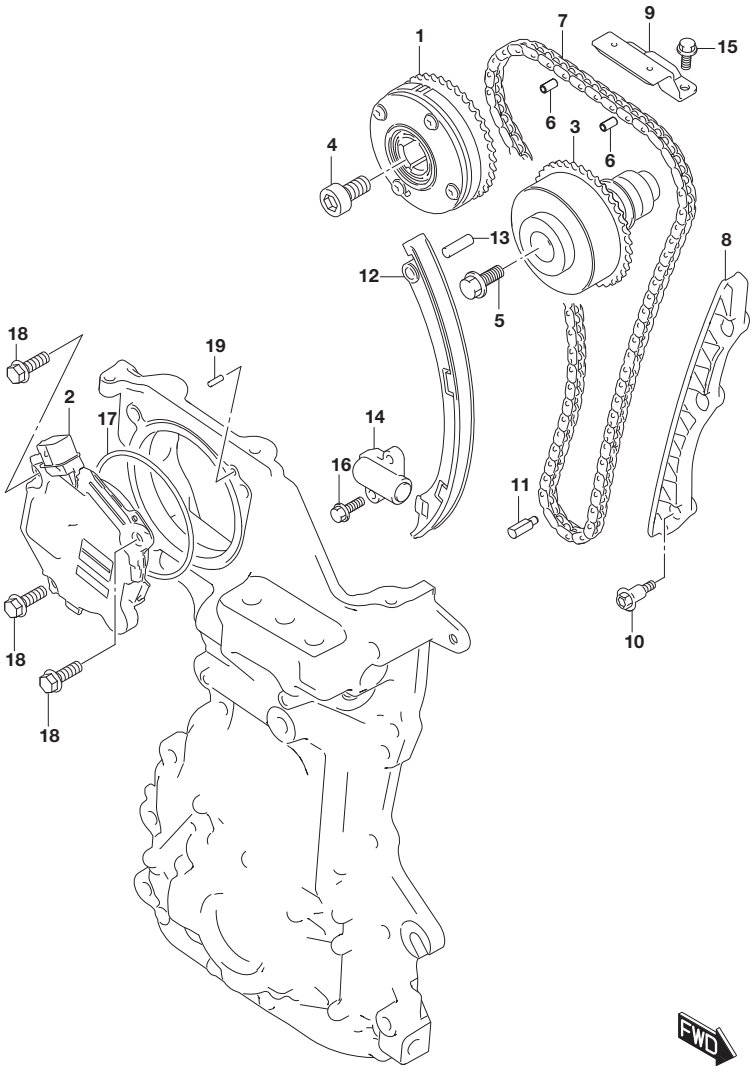

FIG.124C (1-D-8) CAM CHAIN (K14D)

REF NO.	PART NO.	DESCRIPTION	Q'TY	REMARKS
1	12741-53S00	SPROCKET, CAMSHAFT TIMING	1	
2	12742-53S00	DRIVER, CAMSHAFT TIMING	1	
3	12750-53S00	SPROCKET ASSY, CAMSHAFT EXH	1	
4	12744-53S00	BOLT, CAMSHAFT SPROCKET	1	
5	12753-69L00	BOLT, CAMSHAFT SPROCKET (10X41)	1	
6	09206-05001	PIN (3.4X5X10)	2	
7	12761-53SA0	CHAIN, TIMING	1	
8	12771-53SA0	GUIDE, TIMING CHAIN	1	
9	12772-68M00	GUIDE, TIMING CHAIN NO.2	1	
10	12776-68M00	BOLT, TIMING CHAIN GUIDE	3	
11	12781-69G00	JET, TIMING CHAIN	1	
12	12811-53SA0	TENSIONER, TIMING CHAIN	1	
13	12812-50M00	PIN, TIMING CHAIN TENSIONER FIX	1	
14	12831-53SA0	ADJUSTER ASSY, TENSIONER	1	
15	01550-0616A	BOLT	2	
16	01550-0620A	BOLT	2	
17	16119-53S00	O RING, CAMSHAFT TIMING SPRKT	1	
18	01550-0825A	BOLT	3	
19	04221-04089	PIN	2	

FIG.128A

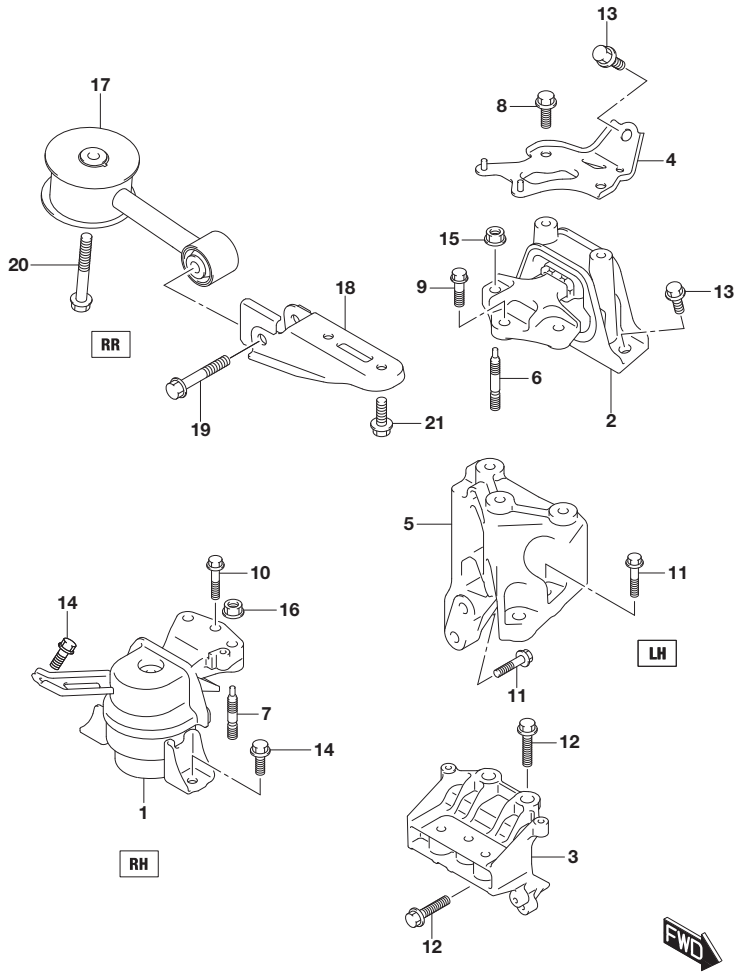

FIG.128A (1-D-9) ENGINE MOUNTING (K10C:5MT)

REF NO.	PART NO.	DESCRIPTION	Q'TY	REMARKS
1	11610-64R00	MOUNTING, ENG RH	1	
2	11620-64R00	MOUNTING, ENG LH	1	
3	11631-64R00	BRACKET, ENG MTG RH	1	
4	11650-68M00	STIFFENER, ENG LH MTG	1	
5	11651-64R00	BRACKET, ENG LH MTG NO.1	1	
6	11652-71L00	STUD BOLT, ENG LH MTG BRKT	2	
7	11652-71L00	STUD BOLT, ENG LH MTG BRKT	2	
8	01550-1020A	BOLT	2	
9	01550-1035C	BOLT	1	
10	01550-1040A	BOLT	1	
11	01550-1040C	BOLT	4	
12	01550-1245A	BOLT	4	
13	01551-1025C	BOLT	3	
14	01551-1025C	BOLT	3	
15	08316-1010C	NUT	2	
16	08316-1010C	NUT	2	
17	11910-64R00	ROD, ENG RR TRQ	1	
18	11930-61M00	BRACKET, ENG RR TRQ ROD	1	
19	09113-12005	BOLT (12X75)	1	
20	09113-12009	BOLT (12X90)	1	
21	01550-1025C	BOLT	2	

FIG.128B(1-D-10) ENGINE MOUNTING (K10C:6AT)
FIG.128C(1-D-11) ENGINE MOUNTING (K14C:6MT)
FIG.128D(1-D-12) ENGINE MOUNTING (K14C:6AT)
FIG.128E(1-D-13) ENGINE MOUNTING (K14D)

FIG.128B

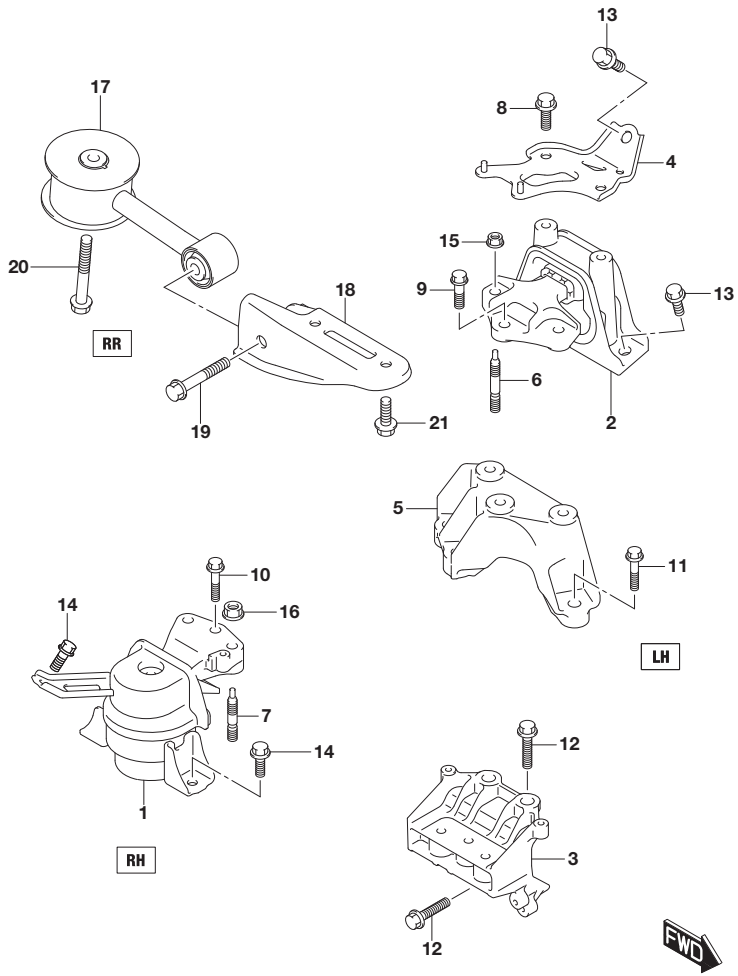

FIG.128B (1-D-10) ENGINE MOUNTING (K10C:6AT)

REF NO.	PART NO.	DESCRIPTION	Q'TY	REMARKS
1	11610-64R00	MOUNTING, ENG RH	1	
2	11620-64R10	MOUNTING, ENG LH	1	
3	11631-64R00	BRACKET, ENG MTG RH	1	
4	11650-68M00	STIFFENER, ENG LH MTG	1	
5	11651-64R10	BRACKET, ENG LH MTG NO.1	1	
6	11652-71L00	STUD BOLT, ENG LH MTG BRKT	2	
7	11652-71L00	STUD BOLT, ENG LH MTG BRKT	2	
8	01550-1020A	BOLT	2	
9	01550-1035C	BOLT	1	
10	01550-1040A	BOLT	1	
11	01550-1040C	BOLT	3	
12	01550-1245A	BOLT	4	
13	01551-1025C	BOLT	3	
14	01551-1025C	BOLT	3	
15	08316-1010C	NUT	2	
16	08316-1010C	NUT	2	
17	11910-64R10	ROD, ENG RR TRQ	1	
18	11930-54P20	BRACKET, ENG RR TRQ ROD	1	
19	09113-12005	BOLT (12X75)	1	
20	09113-12009	BOLT (12X90)	1	
21	01550-1025C	BOLT	2	

FIG.128C

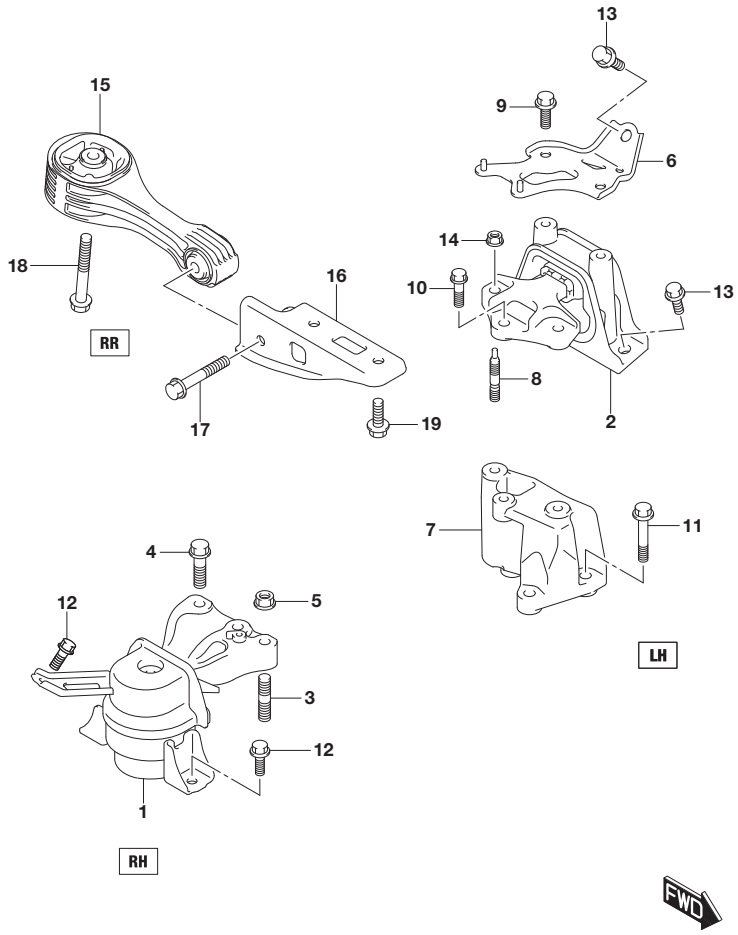

FIG.128C (1-D-11) ENGINE MOUNTING (K14C:6MT)

REF NO.	PART NO.	DESCRIPTION	Q'TY	REMARKS
1	11610-60R00	MOUNTING, ENG RH	1	
2	11620-60R00	MOUNTING, ENG LH	1	
3	11643-68M00	STUD BOLT, ENG RH MTG BRKT	2	
4	11644-68M00	BOLT, ENG RH MTG BRKT	1	
5	11645-68M00	NUT, ENG RH MTG BRKT	2	
6	11650-68M00	STIFFENER, ENG LH MTG	1	
7	11651-60R00	BRACKET, ENG LH MTG NO.1	1	
8	11652-71L00	STUD BOLT, ENG LH MTG BRKT	2	
9	01550-1020A	BOLT	2	
10	01550-1035C	BOLT	1	
11	01550-1040C	BOLT	3	
12	01551-1025C	BOLT	3	
13	01551-1025C	BOLT	3	
14	08316-1010C	NUT	2	
15	11910-61M01	ROD, ENG RR TRQ	1	
16	11930-68M00	BRACKET, ENG RR TRQ ROD	1	
17	09113-12005	BOLT (12X75)	1	
18	09113-12009	BOLT (12X90)	1	
19	01550-1025C	BOLT	2	

FIG.128D

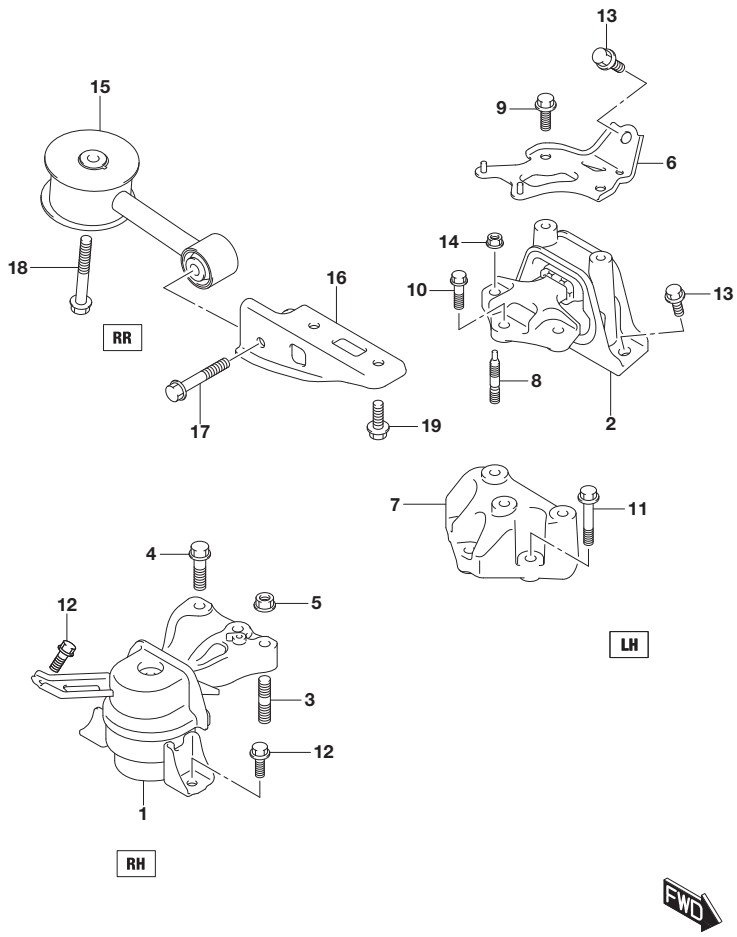

FIG.128D (1-D-12) ENGINE MOUNTING (K14C:6AT)

REF NO.	PART NO.	DESCRIPTION	Q'TY	REMARKS
1	11610-60R00	MOUNTING, ENG RH	1	
2	11620-60R00	MOUNTING, ENG LH	1	
3	11643-68M00	STUD BOLT, ENG RH MTG BRKT	2	
4	11644-68M00	BOLT, ENG RH MTG BRKT	1	
5	11645-68M00	NUT, ENG RH MTG BRKT	2	
6	11650-68M00	STIFFENER, ENG LH MTG	1	
7	11651-60R10	BRACKET, ENG LH MTG NO.1	1	
8	11652-71L00	STUD BOLT, ENG LH MTG BRKT	2	
9	01550-1020A	BOLT	2	
10	01550-1035C	BOLT	1	
11	01550-1040C	BOLT	3	
12	01551-1025C	BOLT	3	
13	01551-1025C	BOLT	3	
14	08316-1010C	NUT	2	
15	11910-60R11	ROD, ENG RR TRQ	1	
16	11930-68M00	BRACKET, ENG RR TRQ ROD	1	
17	09113-12005	BOLT (12X75)	1	
18	09113-12009	BOLT (12X90)	1	
19	01550-1025C	BOLT	2	

FIG.128E

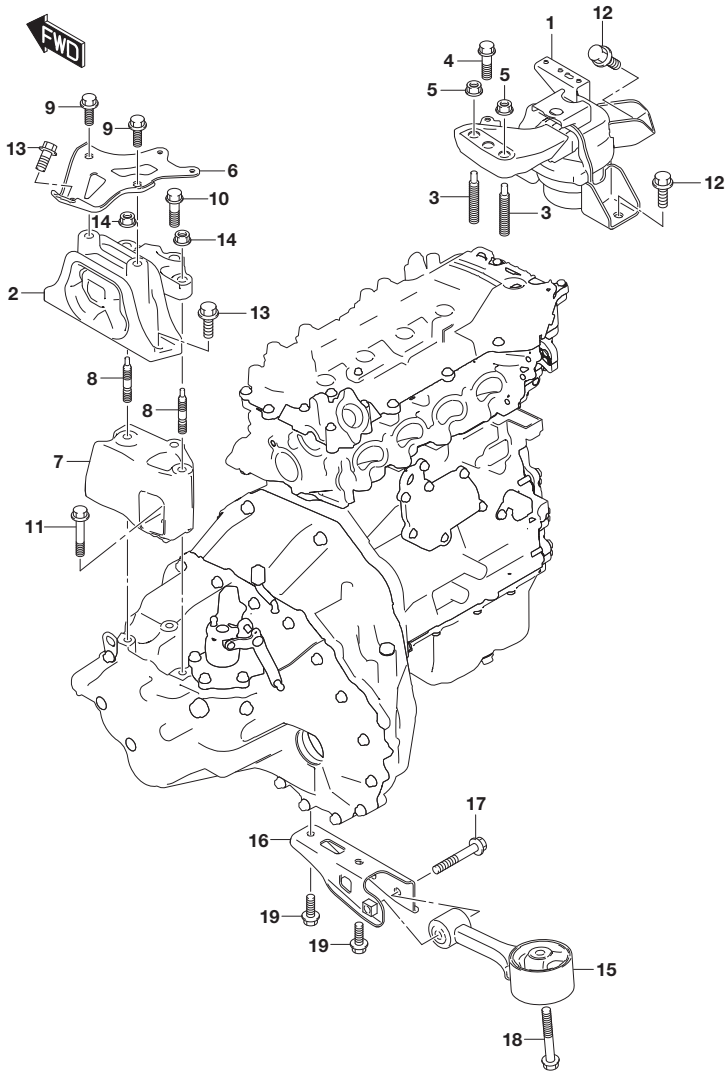

FIG.128E (1-D-13) ENGINE MOUNTING (K14D)

REF NO.	PART NO.	DESCRIPTION	Q'TY	REMARKS
1	11610-74S00	MOUNTING, ENG RH	1	
2	11620-74S00	MOUNTING, ENG LH	1	
3	11643-68M00	STUD BOLT, ENG RH MTG BRKT	2	
4	11644-68M00	BOLT, ENG RH MTG BRKT	1	
5	11645-68M00	NUT, ENG RH MTG BRKT	2	
6	11650-68M00	STIFFENER, ENG LH MTG	1	
7	11651-60R00	BRACKET, ENG LH MTG NO.1	1	
8	11652-71L00	STUD BOLT, ENG LH MTG BRKT	2	
9	01550-1020A	BOLT	2	
10	01550-1035C	BOLT	1	
11	01550-1040C	BOLT	3	
12	01551-1025C	BOLT	3	
13	01551-1025C	BOLT	3	
14	08316-1010C	NUT	2	
15	11910-74S00	ROD, ENG RR TRQ	1	
16	11930-68M00	BRACKET, ENG RR TRQ ROD	1	
17	09113-12005	BOLT (12X75)	1	
18	09113-12009	BOLT (12X90)	1	
19	01550-1025C	BOLT	2	

FIG.130A

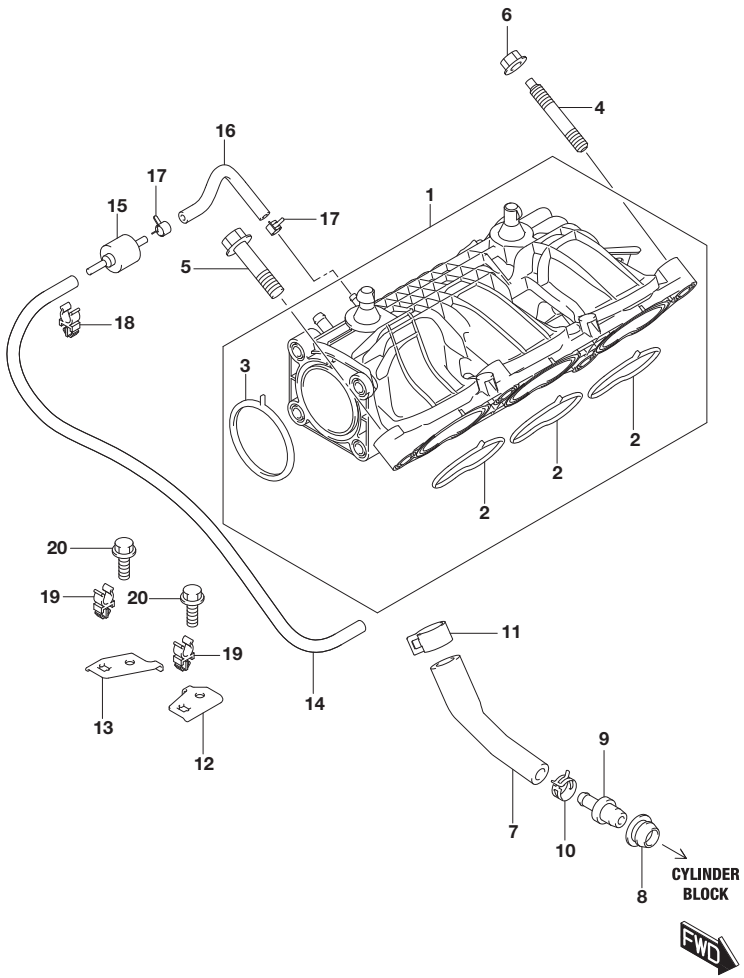

FIG.130A (1-D-14) INTAKE MANIFOLD (K10C)

REF NO.	PART NO.	DESCRIPTION	Q'TY	REMARKS
1	13110-64R00	MANF, INTK	1	
2	13118-64R00	.GASKET, INTK MANF	3	
3	13421-64R00	.GASKET, INTK MANF	1	
4	09108-08294	STUD BOLT	2	
5	01550-0835A	BOLT	2	
6	08316-1008A	NUT	2	
7	11193-64R00	HOSE, PCV	1	TO CYLINDER BLOCK
8	11198-58B00	SEAL, PCV VALVE	1	
9	18118-68M00	VALVE, PCV	1	
10	09401-13414	CLIP (ID:13.8)	1	
11	09401-18404	CLIP (ID:17.8)	1	
12	18111-64R00	BRACKET, ABV VSV HOSE NO.1	1	
13	18112-64R00	BRACKET, ABV VSV HOSE NO.2	1	
14	18122-64R00	HOSE, ABV CONT	1	
15	95569-78040	VALVE, CHECK	1	
16	09355-35002-100	HOSE (3.5X7.5X100)	1	
17	09401-06405	CLIP (ID:6.8)	2	
18	09403-08315	CLAMP (ID:7)	1	
19	09403-08321	CLAMP (8X8)	2	
20	01550-0616A	BOLT	2	

FIG.130B

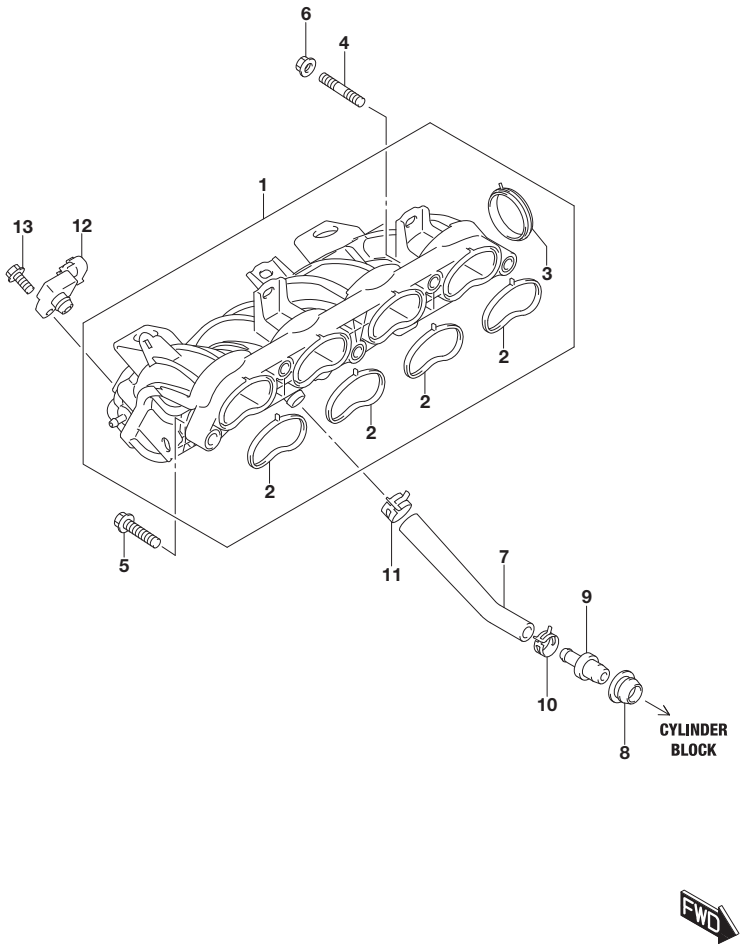

FIG.130B (1-E-2) INTAKE MANIFOLD (K14C)

REF NO.	PART NO.	DESCRIPTION	Q'TY	REMARKS
1	13110-61MA0	MANIFOLD, INTAKE	1	
2	13118-61MA0	.GASKET, INTK MANF	4	
3	13421-61MA0	.GASKET, THROTTLE BODY	1	
4	09108-08294	STUD BOLT	2	
5	01550-0835A	BOLT	3	
6	08316-1008A	NUT	2	
7	11193-61MA0	HOSE, PCV	1	
8	11198-58B00	SEAL, PCV VALVE	1	TO CYLINDER BLOCK
9	18118-68M00	VALVE, PCV	1	
10	09401-13414	CLIP (ID:13.8)	1	
11	09401-18404	CLIP (ID:17.8)	1	
12	18590-68M10	SENSOR ASSY, PRESSURE	1	
13	01550-0616C	BOLT	1	

FIG.130C

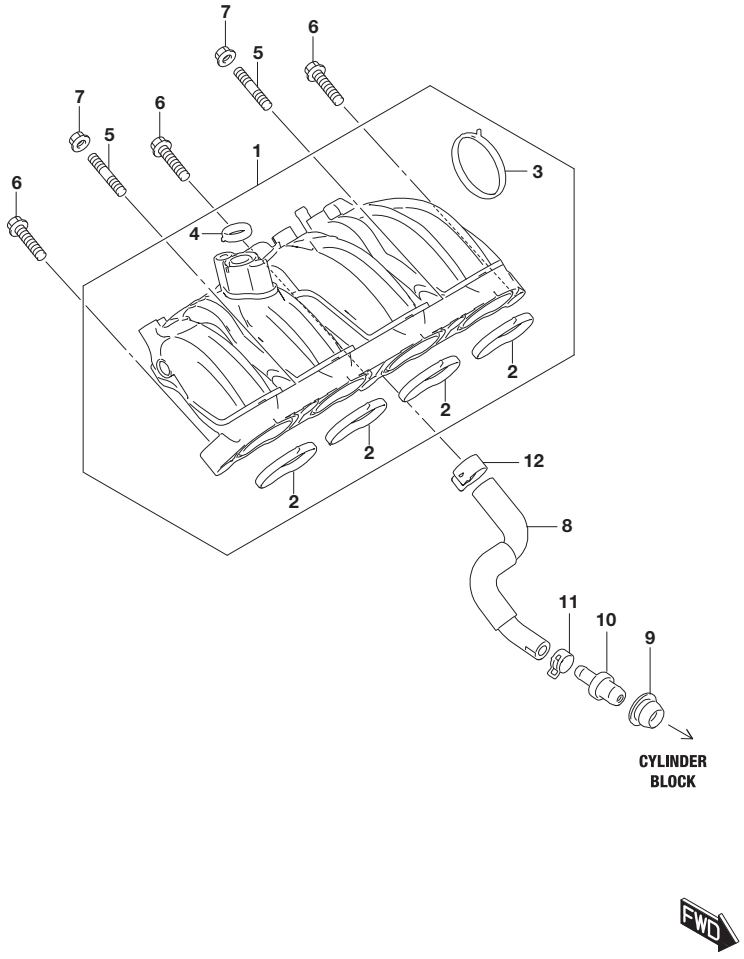

FIG.130C (1-E-3) INTAKE MANIFOLD (K14D)

REF NO.	PART NO.	DESCRIPTION	Q'TY	REMARKS
1	13110-53SA0	MANIFOLD ASSY, INTK	1	
2	13118-61MA0	.GASKET, INTK MANF	4	
3	13421-61MA0	.GASKET, THROTTLE BODY	1	
4	18534-53SA0	.GASKET, EGR	1	
5	09108-08294	STUD BOLT	2	
6	01550-0835A	BOLT	3	
7	08316-1008A	NUT	2	
8	11193-53SA0	HOSE, PCV	1	
9	11198-58B00	SEAL, PCV VALVE	1	
10	18118-53SA0	VALVE, PCV	1	
11	09401-13414	CLIP (ID:13.8)	1	
12	09401-18404	CLIP (ID:17.8)	1	

FIG.142A

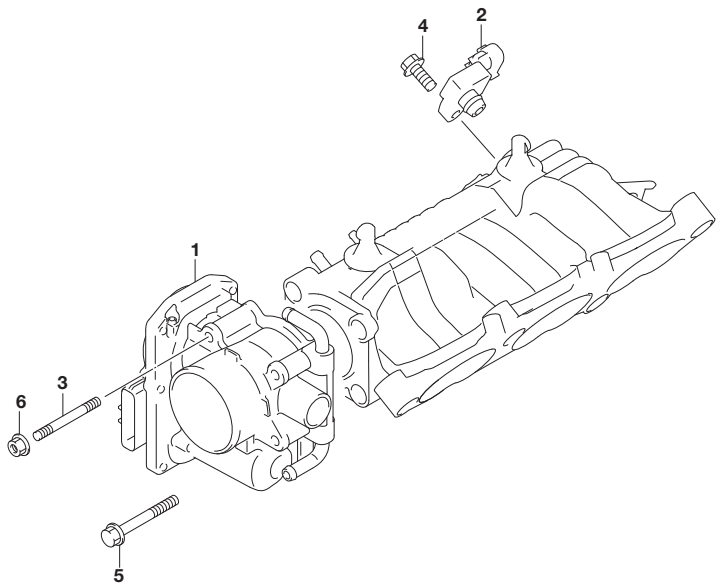

FIG.142A (1-E-4) THROTTLE BODY (K10C)

REF NO.	PART NO.	DESCRIPTION	Q'TY	REMARKS
1	13400-61MA0	BODY ASSY, THROTTLE	1	
2	18590-68M10	SENSOR ASSY, PRESSURE	1	
3	01421-0650A	STUD BOLT	2	
4	01550-0616A	BOLT	1	
5	01550-0650A	BOLT	2	
6	08316-1006A	NUT	2	

FIG.142B

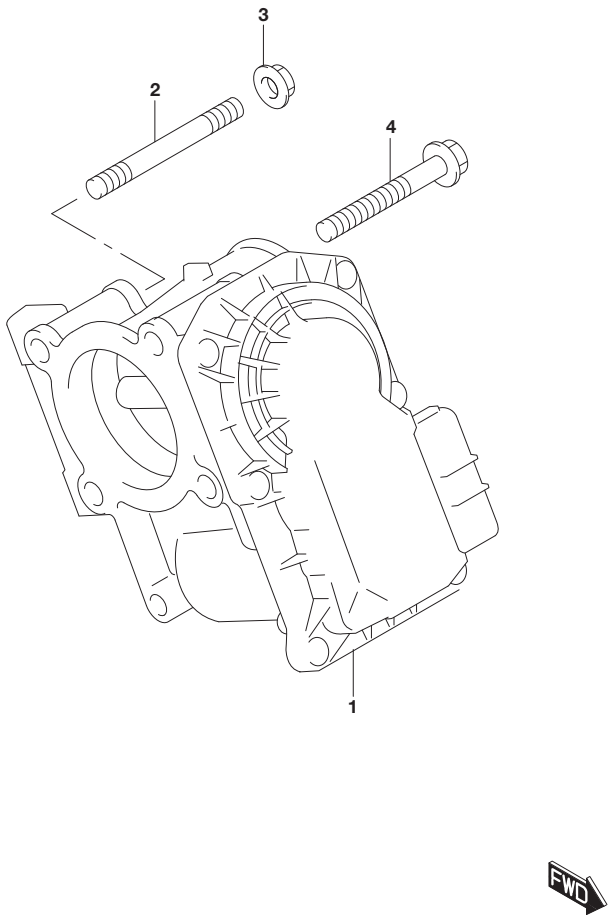

FIG.142B (1-E-5) THROTTLE BODY (K14C)

REF NO.	PART NO.	DESCRIPTION	Q'TY	REMARKS
1	13400-61MA0	BODY ASSY, THROTTLE	1	
2	01421-0650A	STUD BOLT	2	
3	08316-1006A	NUT	2	
4	01550-0650A	BOLT	2	

FIG.142C

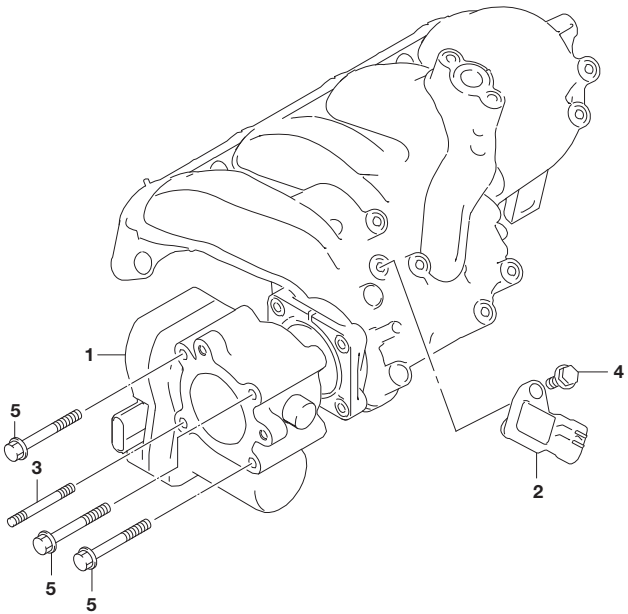

FIG.142C (1-E-6) THROTTLE BODY (K14D)

REF NO.	PART NO.	DESCRIPTION	Q'TY	REMARKS
1	13400-76R00	BODY ASSY, THROTTLE	1	
2	18590-53SA0	SENSOR ASSY, PRESSURE	1	
3	09108-06153	STUD BOLT	1	
4	01550-0616C	BOLT	1	
5	01550-0665C	BOLT	3	

FIG.150A

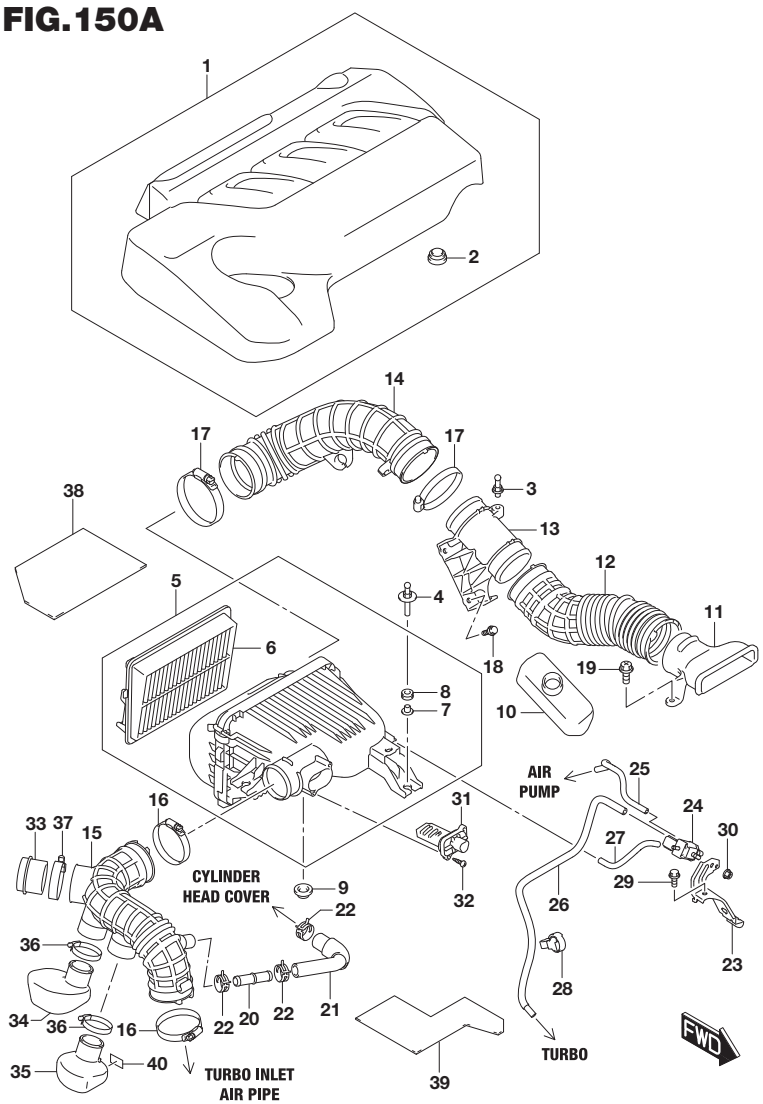

FIG.150A (1-E-7) AIR CLEANER (K10C)

REF NO.	PART NO.	DESCRIPTION	Q'TY	REMARKS
1	13170-64R00	COVER, ENGINE	1	
2	13172-61MA0	.CUSHION	4	
3	13176-67J00	BOLT, ENGINE COVER	2	
4	13177-68M00	BOLT, ENGINE COVER	2	
5	13700-64R00	CLEANER ASSY, AIR	1	
6	13780-50R00	.ELEMENT, AIR CLEANER	1	
7	13812-84MA0	.COLLAR, AIR CLEANER	2	
8	13813-84MA0	.GROMMET, AIR CLEANER	2	
9	13723-84MB0	GROMMET	2	
10	13764-86R00	RESONATOR	1	
11	13765-54P00	PIPE, AIR CLEANER SUCTION	1	
12	13766-86R00	HOSE, AIR SUCTION NO.1	1	
13	13767-64R00	PIPE, AIR SUCTION	1	
14	13768-50R00	HOSE, AIR SUCTION NO.2	1	
15	13881-64R00	HOSE, AIR CLEANER OUTLET	1	AIR CLEANER ASSY TO TURBO INLET PIPE
16	09402-82511	CLAMP (ID:82)	2	
17	09402-69511	CLAMP (ID:69)	2	
18	01550-0616A	BOLT	2	
19	02162-0616A	SCREW	2	
20	11190-76M00	UNION, BREATHER	1	
21	11191-64R00	HOSE, BREATHER	1	CYLINDER HEAD COVER TO UNION
22	09401-18404	CLIP (ID:17.8)	3	
23	18112-50R00	BRACKET, WG VSV	1	
24	18117-68M00	VALVE, WASTEGATE CONT	1	
25	18126-64R00	HOSE, WG CONT	1	AIR PUMP TO WASTEGATE CONTROL VALVE
26	18127-64R00	HOSE, WG CONT	1	
27	18129-64R00	HOSE, WG CONT	1	
28	09408-00230	CLAMP	1	
29	01550-0612A	BOLT	1	
30	08316-1006A	NUT	1	
31	13800-69L00	SENSOR ASSY, MAIN AIR FLOW	1	
32	03511-0416A	SCREW	2	
33	13761-64R00	RESONATOR, NO.1	1	
34	13762-64R00	RESONATOR, NO.2	1	

FIG.150A

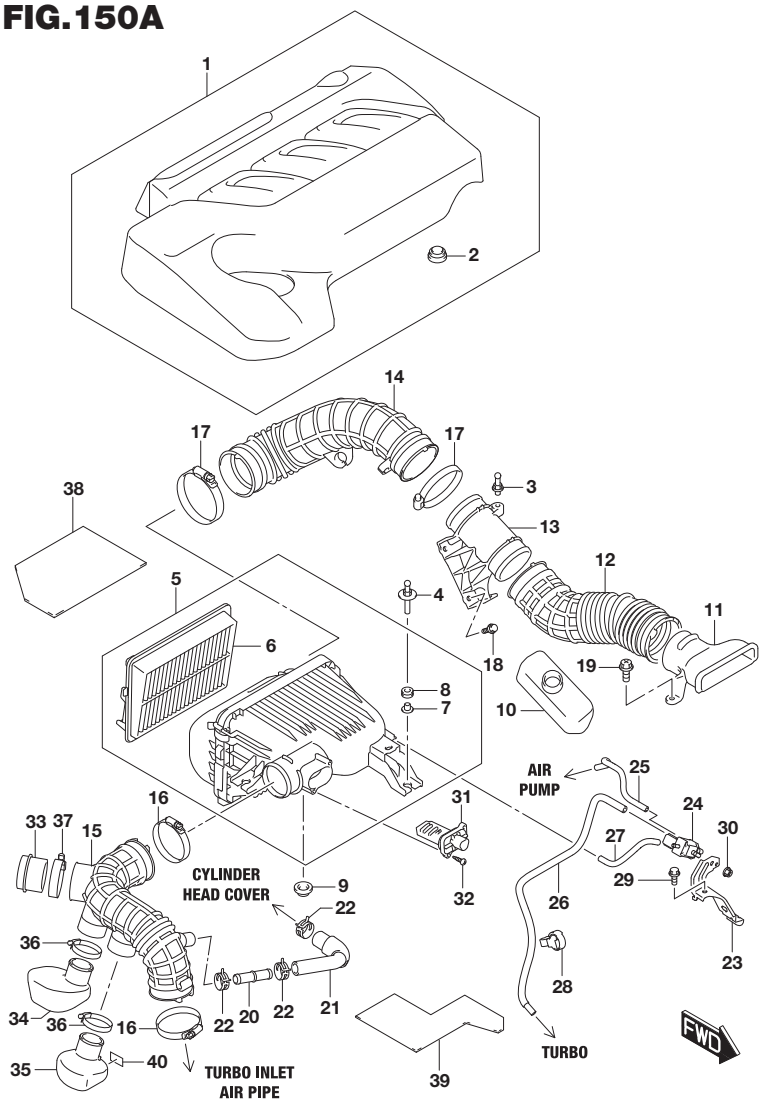

FIG.150A (1-E-8) AIR CLEANER (K10C)

REF NO.	PART NO.	DESCRIPTION	Q'TY	REMARKS
35	13763-64R00	RESONATOR, NO.3	1	
36	09402-46511	CLAMP (ID:46)	2	
37	09402-57511	CLAMP (L:29)	1	
38	13711-64R00	PAD, AIR CLNR NO.1	1	
39	13712-64R00	PAD, AIR CLNR NO.2	1	
40	72499-84G00	FILM	1	

FIG.150B

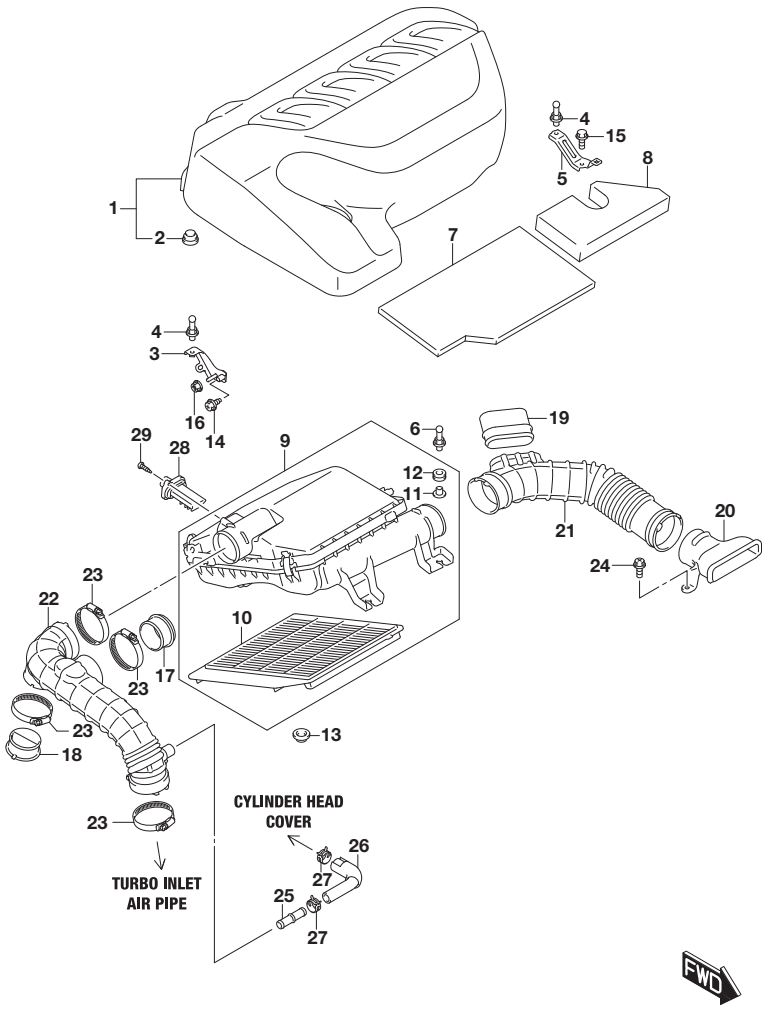

FIG.150B (1-E-9) AIR CLEANER (K14C)

REF NO.	PART NO.	DESCRIPTION	Q'TY	REMARKS
1	13170-61MA0	COVER, ENGINE	1	
2	13172-61MA0	.CUSHION	4	
3	13175-68M00	BRACKET, ENGINE COVER	1	
4	13176-67J00	BOLT, ENGINE COVER	2	
5	13176-68M00	BRACKET, ENGINE COVER NO.2	1	
6	13177-68M00	BOLT, ENGINE COVER	2	
7	13178-68M00	SILENCER, ENGINE COVER NO.1	1	
8	13179-68M00	SILENCER, ENGINE COVER NO.2	2	
9	13700-61MA0	CLEANER ASSY, AIR	1	
10	13780-68M00	.ELEMENT, AIR CLEANER	1	
11	13812-84MA0	.COLLAR, AIR CLEANER	2	
12	13813-84MA0	.GROMMET, AIR CLEANER	2	
13	13723-84MB0	GROMMET	2	
14	09116-06205	BOLT (6X16)	1	
15	01550-0612A	BOLT	1	
16	08316-1006C	NUT	1	
17	13761-68M00	RESONATOR	1	
18	13762-68M00	RESONATOR	1	
19	13763-68M00	RESONATOR	1	
20	13765-54P00	PIPE, AIR CLEANER SUCTION	1	
21	13766-60R00	HOSE, AIR SUCTION	1	
22	13881-61MA0	HOSE, AIR CLEANER OUTLET	1	TO TURBO INLET AIR PIPE
23	09402-69511	CLAMP (ID:69)	4	
24	02162-0616A	SCREW	2	
25	11190-76M00	UNION, BREATHER	1	
26	11191-61MA0	HOSE, BREATHER	1	TO CYLINDER HEAD COVER
27	09401-18404	CLIP (ID:17.8)	2	
28	13800-69L00	SENSOR ASSY, MAIN AIR FLOW	1	
29	03511-0416A	SCREW	2	

FIG.150C

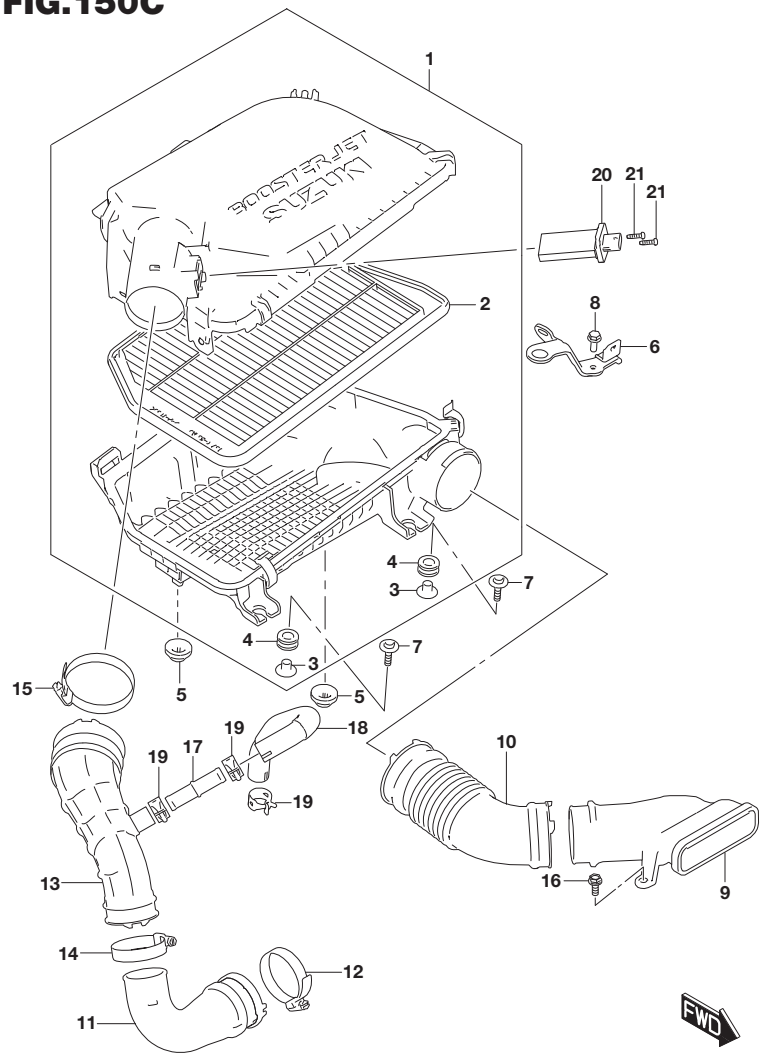

FIG.150C (1-E-10) AIR CLEANER (K14D)

REF NO.	PART NO.	DESCRIPTION	Q'TY	REMARKS
1	13700-53SA0	CLEANER ASSY, AIR	1	
2	13780-53SA0	.ELEMENT, AIR CLEANER	1	
3	13812-84MA0	.COLLAR, AIR CLEANER	2	
4	13813-84MA0	.GROMMET, AIR CLEANER	2	
5	13723-84MB0	GROMMET	2	
6	13811-53SA0	BRACKET, AIR CLEANER	1	
7	09136-06141	SCREW (6X25)	2	
8	01550-0616A	BOLT	1	
9	13765-53SA0	PIPE, AIR CLEANER SUCTION	1	
10	13766-53SA0	HOSE, AIR SUCTION	1	
11	13881-53SA0	PIPE, AIR CLNR OUTLET	1	
12	09402-69511	.CLAMP (ID:69)	1	
13	13882-53SA0	HOSE, AIR CLEANER OUTLET NO.1	1	
14	09402-57511	CLAMP (L:29)	1	
15	09402-82511	CLAMP (ID:82)	1	
16	02162-0616A	SCREW	2	
17	11190-76M00	UNION, BREATHER	1	
18	11191-53SA0	HOSE, BREATHER	1	
19	09401-18404	CLIP (ID:17.8)	3	
20	13800-53S00	SENSOR ASSY, MAF	1	
21	03511-0416A	SCREW	2	

FIG.153A

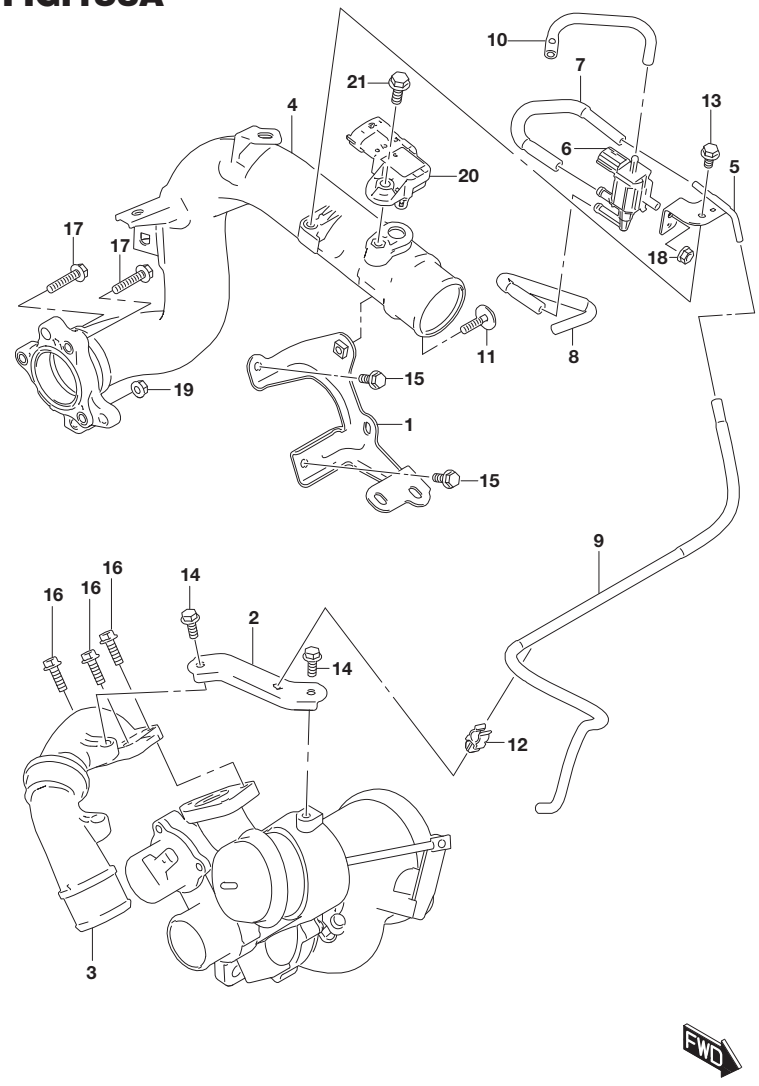

FIG.153A (1-E-11) TURBO CONTROL HOSE (K14D)

REF NO.	PART NO.	DESCRIPTION	Q'TY	REMARKS
1	13952-53SA0	BRACKET, I/C OUTLET PIPE	1	
2	13961-53SA0	BRACKET, TURBO OUTLET PIPE	1	
3	13960-53SA0	PIPE, TURBO OUTLET AIR	1	
4	13970-53SA0	PIPE, INTER COOLER OUTLET	1	
5	18112-53SA0	BRACKET, WG VSV	1	
6	18117-68M00	VALVE, WASTEGATE CONT	1	
7	18122-53SA0	HOSE, WG CONT	1	
8	18126-53SA0	HOSE, WG CONT	1	
9	18127-53SA0	HOSE, WG CONT	1	
10	18129-53SA0	HOSE, WG CONT	1	
11	09136-06141	SCREW (6X25)	1	
12	09403-08321	CLAMP (8X8)	1	
13	01550-0612C	BOLT	1	
14	01550-0616A	BOLT	2	
15	01550-0616A	BOLT	2	
16	01550-0620A	BOLT	3	
17	01550-0630C	BOLT	2	
18	08316-1006A	NUT	1	
19	08316-1006C	NUT	1	
20	18590-53S20	SENSOR ASSY, PRESSURE	1	
21	01550-0616C	BOLT	1	

FIG.154A

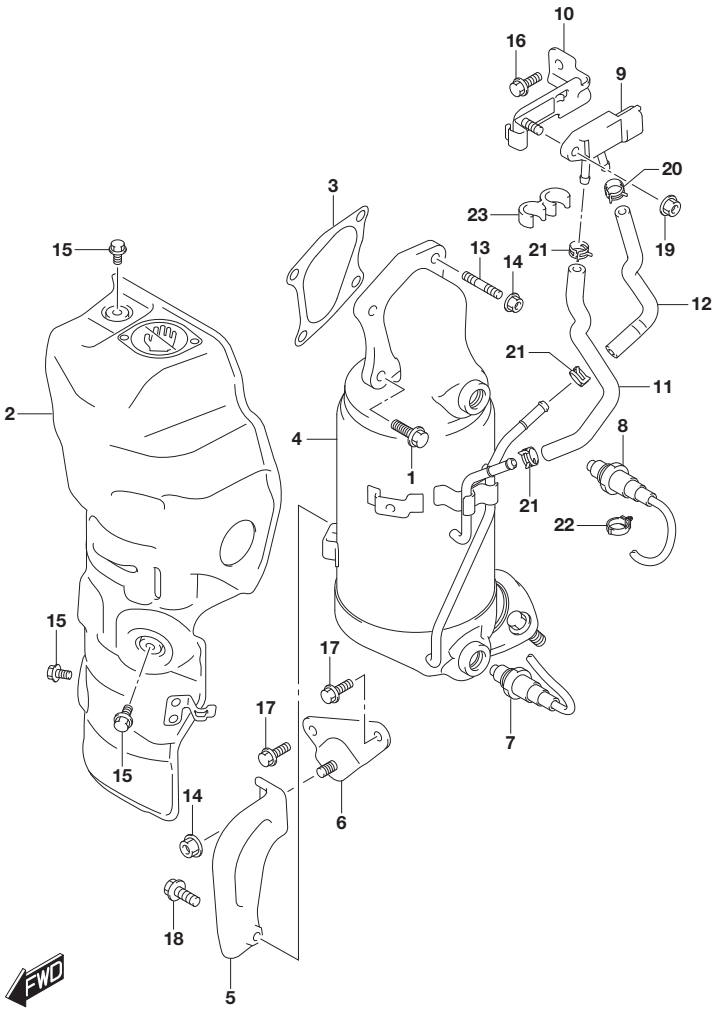

FIG.154A (1-E-12) EXHAUST MANIFOLD (K10C)

REF NO.	PART NO.	DESCRIPTION	Q'TY	REMARKS
1	14118-70G50	BOLT, EXH MANIFOLD (8X25)	2	
2	14121-64R10	COVER, EXH MANF	1	
3	14182-86P00	GASKET, TC OUTLET PIPE	1	
4	14220-64R10-H02	CASE, CATALYST WITH GPF	1	SEE NOTE
5	14271-64R10	STIFFENER, EXH MANF	1	
6	14272-64R10	BRACKET, EXH MANF	1	
7	18213-60RB0	SENSOR, OXYGEN REAR	1	
8	18213-64R10	SENSOR, A/F	1	
9	18215-53SA0	SENSOR, GPF PRESSURE	1	
10	18216-64R10	BRACKET, GPF PRESSURE SENSOR	1	
11	18217-64R10	HOSE, GPF PRESSURE NO.1	1	
12	18218-64R10	HOSE, GPF PRESSURE NO.2	1	
13	09108-08297	STUD BOLT	2	
14	09159-08130	NUT	3	
15	01550-0612C	BOLT	3	
16	01550-0816A	BOLT	1	
17	01550-0816C	BOLT	2	
18	01550-0820C	BOLT	1	
19	08316-1006A	NUT	1	
20	09401-11419	CLIP (ID:11.1)	1	
21	09401-13419	CLIP (ID:13.1)	3	

NOTE : VEHICLE MANUFACTURER'S NAME : SUZUKI
MAKE OF CATALYTIC CONVERTER
(ENGINE MANUFACTURER'S NAME OR TRADE MARK) : SUZUKI
ID NUMBER : 64R-C11
TYPE OF VEHICLE : JY A02S,JY B02S, LY D01S,LY E01S,AZ C13S
SUITABLE FOR OBD SYSTEM : YES

FIG.154B(1-E-14) EXHAUST MANIFOLD (K14C:TYPE 3)
FIG.154C(1-F-2) EXHAUST MANIFOLD (K14C:TYPE 4)
FIG.154D(1-F-3) EXHAUST MANIFOLD (K14D)

FIG.154A

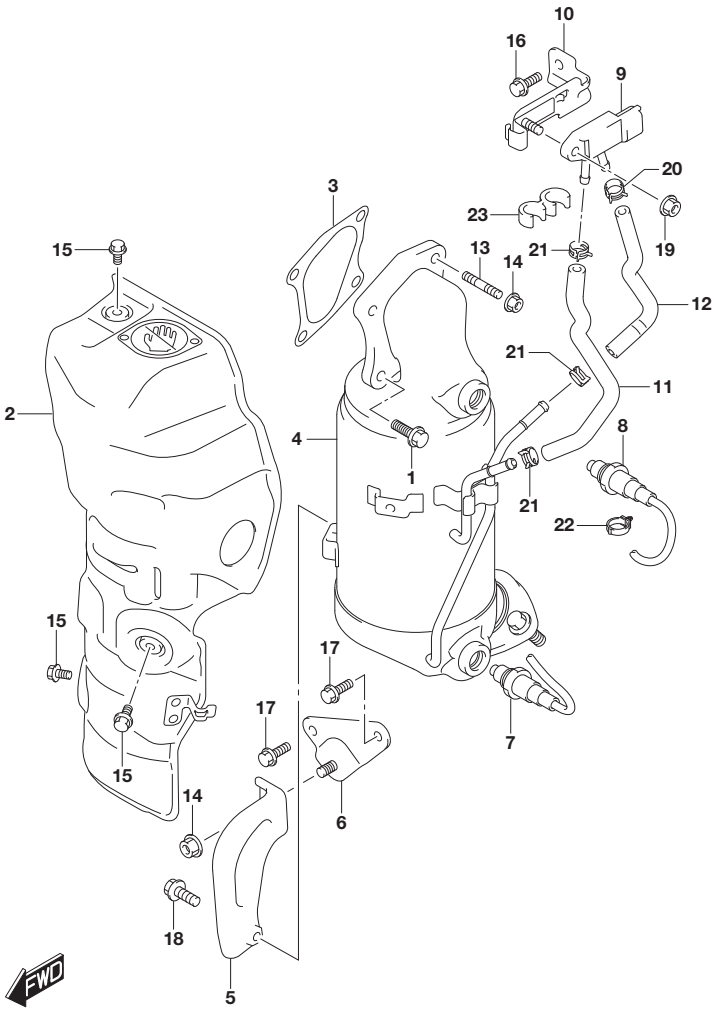

FIG.154A (1-E-13) EXHAUST MANIFOLD (K10C)

REF NO.	PART NO.	DESCRIPTION	Q'TY	REMARKS
22	09403-12L06	CLAMP	1	
23	09408-00121	CLAMP	1	

FIG.154B

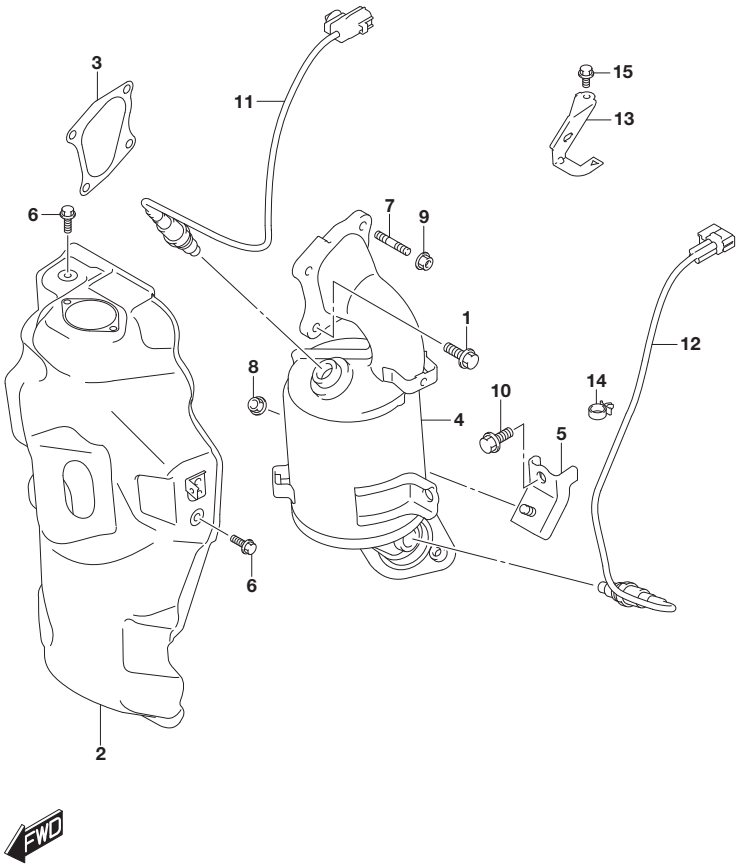

FIG.154B (1-E-14) EXHAUST MANIFOLD (K14C:TYPE 3)

REF NO.	PART NO.	DESCRIPTION	Q'TY	REMARKS
1	14118-70G50	BOLT, EXH MANIFOLD (8X25)	2	
2	14121-86P00	COVER, EXH MANF	1	
3	14182-86P00	GASKET, TC OUTLET PIPE	1	
4	14220-60R00-H02	CASE, CATALYST	1	SEE NOTE
5	14271-86P00	STIFFENER, CATALYST CASE	1	
6	01550-0612C	BOLT	3	
7	09108-08297	STUD BOLT	2	
8	09159-08130	NUT	1	
9	09159-08130	NUT	2	
10	01550-1020A	BOLT	2	
11	18213-60RA0	SENSOR, OXYGEN	1	
12	18213-60RB0	SENSOR, OXYGEN REAR	1	
13	18214-86P00	BRACKET, OXYGEN SENSOR	1	
14	09403-13409	CLAMP	1	
15	01550-0612A	BOLT	1	

NOTE : VEHICLE MANUFACTURER'S NAME : SUZUKI
MAKE OF CATALYTIC CONVERTER
(ENGINE MANUFACTURER'S NAME OR TRADE MARK) : SUZUKI
ID NUMBER : 60R-C01
TYPE OF VEHICLE : LY DA1S,LY EA1S,JY AA2S,JY BA2S
SUITABLE FOR OBD SYSTEM : YES

FIG.154C

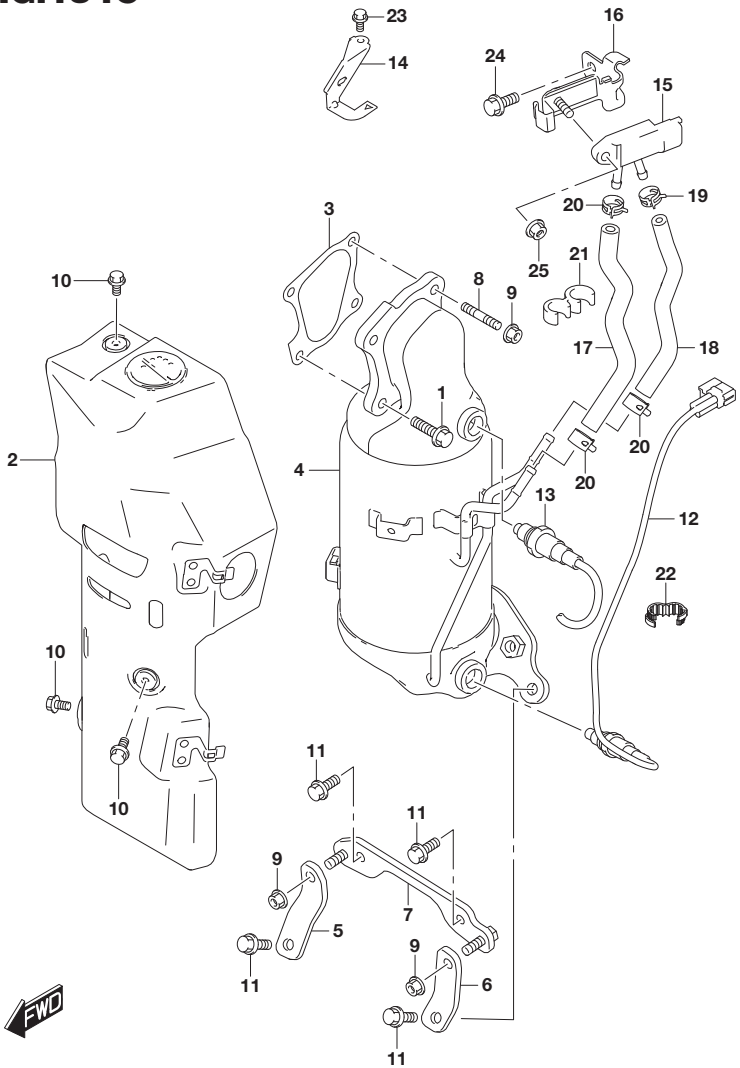

FIG.154C (1-F-2) EXHAUST MANIFOLD (K14C:TYPE 4)

REF NO.	PART NO.	DESCRIPTION	Q'TY	REMARKS
1	14118-70G50	BOLT, EXH MANIFOLD (8X25)	2	
2	14121-60R10	COVER, EXH MANF	1	
3	14182-86P00	GASKET, TC OUTLET PIPE	1	
4	14220-60R10-H02	CASE, CATALYST WITH GPF	1	SEE NOTE
5	14271-60R10	STIFFENER, EXH MANF NO.1	1	
6	14272-60R10	STIFFENER, EXH MANF NO.2	1	
7	14273-60R10	BRACKET, EXH MANF	1	
8	09108-08297	STUD BOLT	2	
9	09159-08130	NUT	4	
10	01550-0612C	BOLT	3	
11	01550-0820C	BOLT	4	
12	18213-60RB0	SENSOR, OXYGEN REAR	1	
13	18213-64R10	SENSOR, A/F	1	
14	18214-86P00	BRACKET, OXYGEN SENSOR	1	
15	18215-53SA0	SENSOR, GPF PRESSURE	1	
16	18216-60R10	BRACKET, GPF PRESSURE SENSOR	1	
17	18217-60R10	HOSE, GPF PRESSURE NO.1	1	
18	18218-60R10	HOSE, GPF PRESSURE NO.2	1	
19	09401-11419	CLIP (ID:11.1)	1	
20	09401-13419	CLIP (ID:13.1)	3	
21	09408-00121	CLAMP	1	
22	09408-00258	CLAMP	1	
23	01550-0612A	BOLT	1	
24	01550-0816A	BOLT	1	
25	08316-1006A	NUT	1	

NOTE : VEHICLE MANUFACTURER'S NAME : SUZUKI
MAKE OF CATALYTIC CONVERTER
(ENGINE MANUFACTURER'S NAME OR TRADE MARK) : SUZUKI
ID NUMBER : 60R-C11
TYPE OF VEHICLE : JY AA2S,JY BA2S,LY DA1S,LY EA1S
SUITABLE FOR OBD SYSTEM : YES

FIG.154D

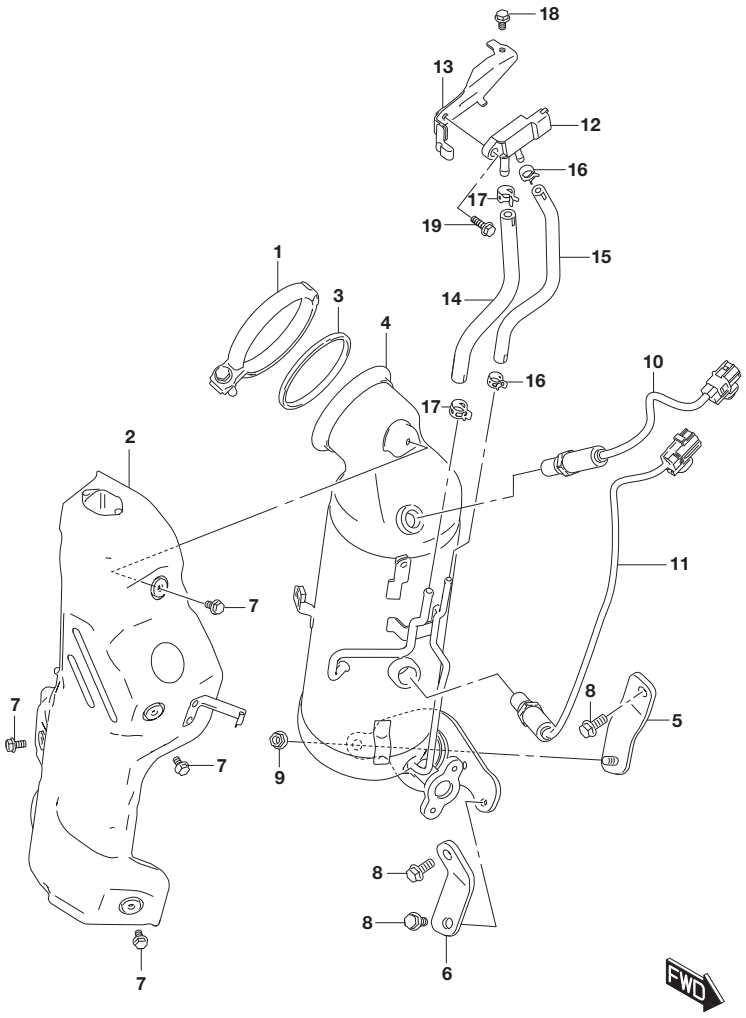

FIG.154D (1-F-3) EXHAUST MANIFOLD (K14D)

REF NO.	PART NO.	DESCRIPTION	Q'TY	REMARKS
1	14118-53SA0	CLAMP, TURBO CHARGER OUTLET	1	
2	14121-53SA0	COVER, CTLST CASE	1	
3	14182-53SA0	GASKET, TC OUTLET	1	
4	14220-53SA0-H02	CASE, CATALYST WITH GPF	1	SEE NOTE
5	14271-53SB0	STIFFENER, CTLST CASE NO.1	1	
6	14272-53SB0	STIFFENER, CTLST CASE NO.2	1	
7	01550-0612C	BOLT	4	
8	01550-0820C	BOLT	3	
9	08316-1008C	NUT	1	
10	18213-53SA0	SENSOR, A/F	1	
11	18213-53SB0	SENSOR, OXYGEN REAR	1	
12	18215-53SA0	SENSOR, GPF PRESSURE	1	
13	18216-53SA0	BRACKET, GPF PRESSURE SENSOR	1	
14	18217-53SA0	HOSE, GPF PRESSURE NO.1	1	
15	18218-53SA0	HOSE, GPF PRESSURE NO.2	1	
16	09401-11419	CLIP (ID:11.1)	2	
17	09401-12410	CLIP	2	
18	01550-0612C	BOLT	1	
19	01550-0620C	BOLT	1	

NOTE : VEHICLE MANUFACTURER'S NAME : SUZUKI
MAKE OF CATALYTIC CONVERTER
(ENGINE MANUFACTURER'S NAME OR TRADE MARK) : SUZUKI
ID NUMBER : 53S-C01
TYPE OF VEHICLE : AZ CC3S,JY AD2S,JY BD2S,LY DD1S,LY ED1S
SUITABLE FOR OBD SYSTEM : YES

FIG.156A

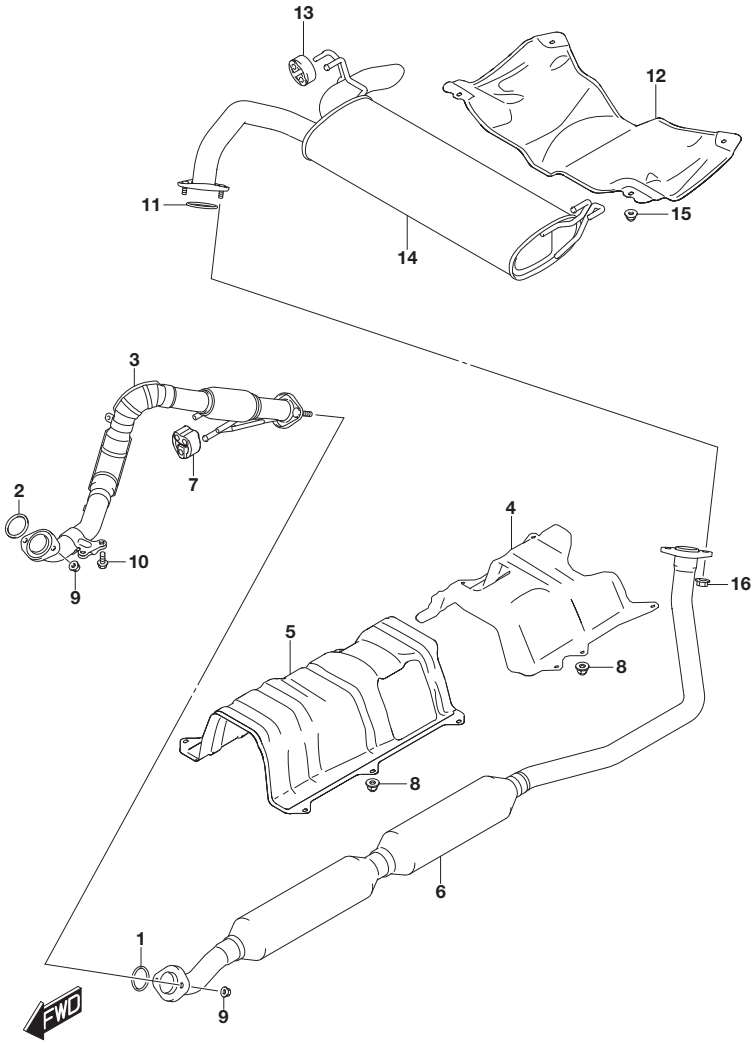

FIG.156A (1-F-4) MUFFLER (K10C)

REF NO.	PART NO.	DESCRIPTION	Q'TY	REMARKS
1	14182-58B10	GASKET, MUFFLER	1	
2	14184-60G00	GASKET, EXH PIPE	1	
3	14190-86R00	PIPE, EXH NO.1	1	
4	14231-54P00	INSULATOR, SUB CHAMBER HEAT	1	
5	14231-61M00	INSULATOR, CATALYST HEAT	1	
6	14250-86R00	PIPE, EXH CENTER	1	
7	14281-61M00	MOUNTING, MUFFLER	1	
8	14357-72J00	NUT, HEAT INSULATOR	4	
9	09159-10102	NUT	4	
10	01550-0820C	BOLT	2	
11	14182-78K00	GASKET, MUFFLER	1	
12	14231-61M20	INSULATOR, MUFFLER HEAT	1	
13	14281-57L00	MOUNTING, MUFFLER	2	
14	14300-60R01	MUFFLER	1	
15	14357-72J00	NUT, HEAT INSULATOR	4	
16	09159-10102	NUT	2	

FIG.156B

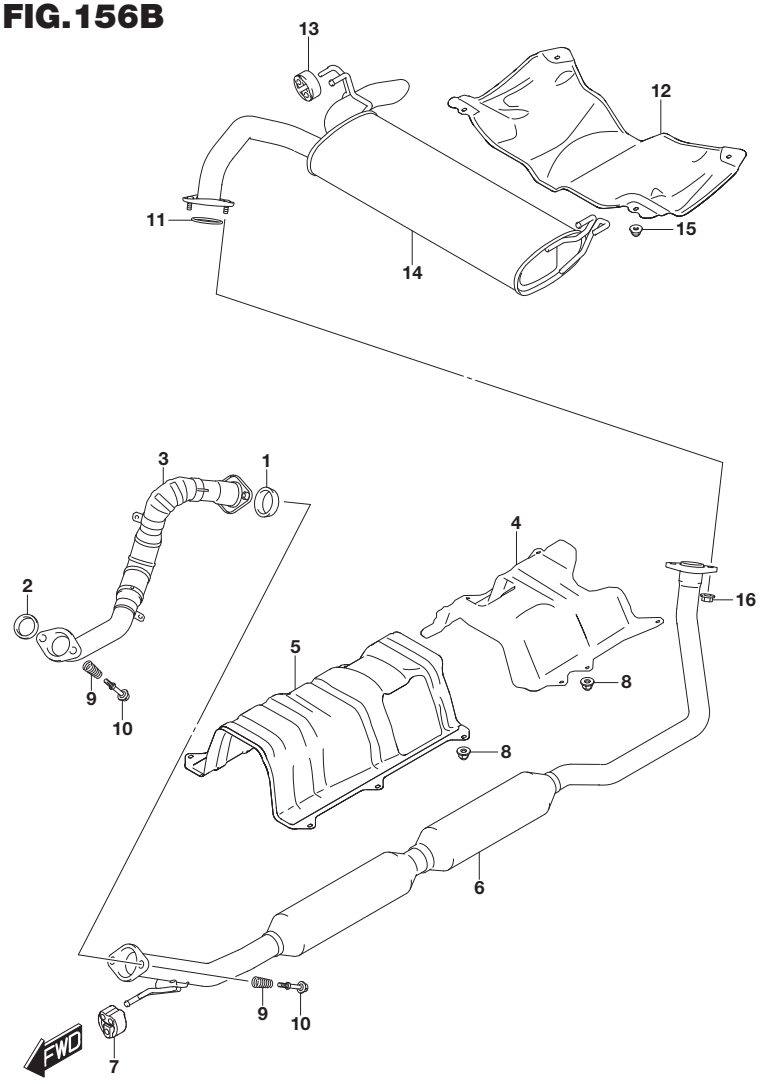

FIG.156B (1-F-5) MUFFLER (K14C)

REF NO.	PART NO.	DESCRIPTION	Q'TY	REMARKS
1	14183-79J00	RING, SEAL EXH PIPE	1	
2	14183-79J10	RING, SEAL EXH PIPE	1	
3-1	14190-60R00	PIPE, EXH NO.1	1	TYPE 3
3-2	14190-74S00	PIPE, EXH NO.1	1	TYPE 4
4	14231-54P00	INSULATOR, SUB CHAMBER HEAT	1	
5	14231-61M00	INSULATOR, CATALYST HEAT	1	
6	14250-60R00	PIPE, EXH CENTER	1	
7	14281-61M00	MOUNTING, MUFFLER	1	
8	14357-72J00	NUT, HEAT INSULATOR	4	
9	14492-82610	SPRING, EXH PIPE	4	
10	09119-10073	BOLT (10X65)	4	
11	14182-78K00	GASKET, MUFFLER	1	
12	14231-61M20	INSULATOR, MUFFLER HEAT	1	
13	14281-57L00	MOUNTING, MUFFLER	2	
14	14300-60R01	MUFFLER	1	
15	14357-72J00	NUT, HEAT INSULATOR	4	
16	09159-10102	NUT	2	

APK414-3 P22 156B
MUFFLER (2)

FIG.156C

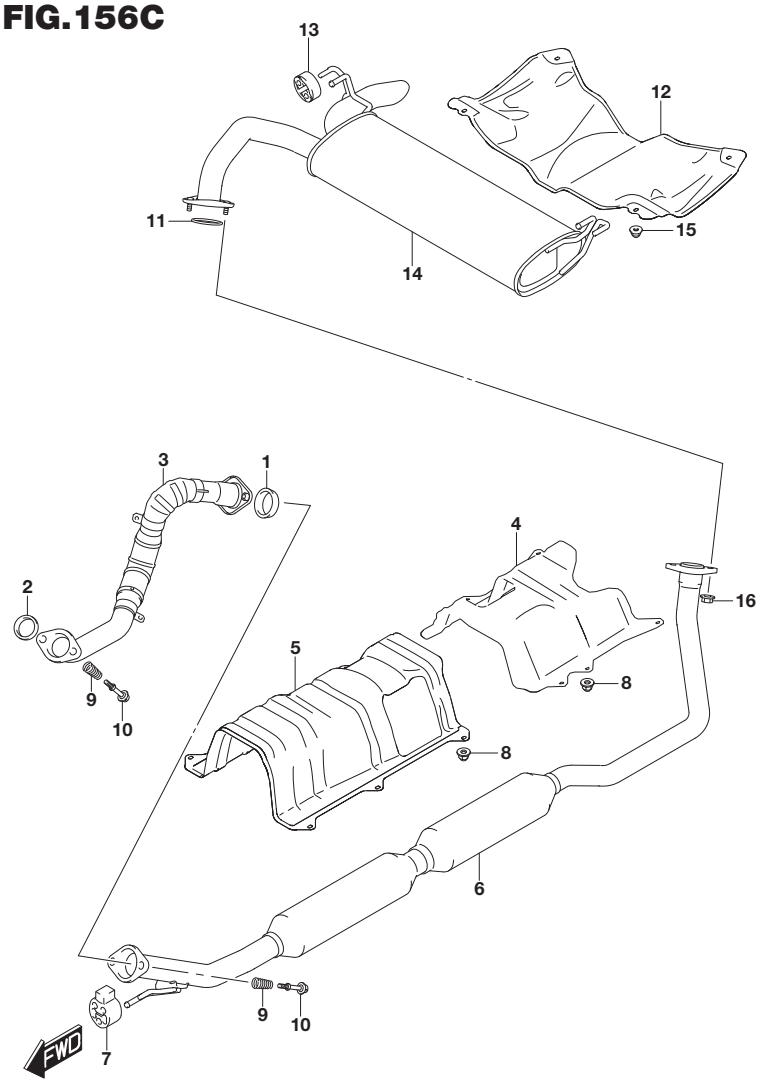

FIG.156C (1-F-6) MUFFLER (K14D)

REF NO.	PART NO.	DESCRIPTION	Q'TY	REMARKS
1	14183-79J00	RING, SEAL EXH PIPE	1	
2	14183-79J10	RING, SEAL EXH PIPE	1	
3	14190-74S00	PIPE, EXH NO.1	1	
4	14231-54P00	INSULATOR, SUB CHAMBER HEAT	1	
5	14231-61M00	INSULATOR, CATALYST HEAT	1	
6	14250-60R00	PIPE, EXH CENTER	1	
7	14281-61M20	MOUNTING, MUFFLER	1	
8	14357-72J00	NUT, HEAT INSULATOR	4	
9	14492-82610	SPRING, EXH PIPE	4	
10	09119-10073	BOLT (10X65)	4	
11	14182-78K00	GASKET, MUFFLER	1	
12	14231-61M20	INSULATOR, MUFFLER HEAT	1	
13	14281-57L00	MOUNTING, MUFFLER	2	
14	14300-74S00	MUFFLER	1	
15	14357-72J00	NUT, HEAT INSULATOR	4	
16	09159-10102	NUT	2	

APK414-3 P22 156C
MUFFLER (3)

FIG.158A

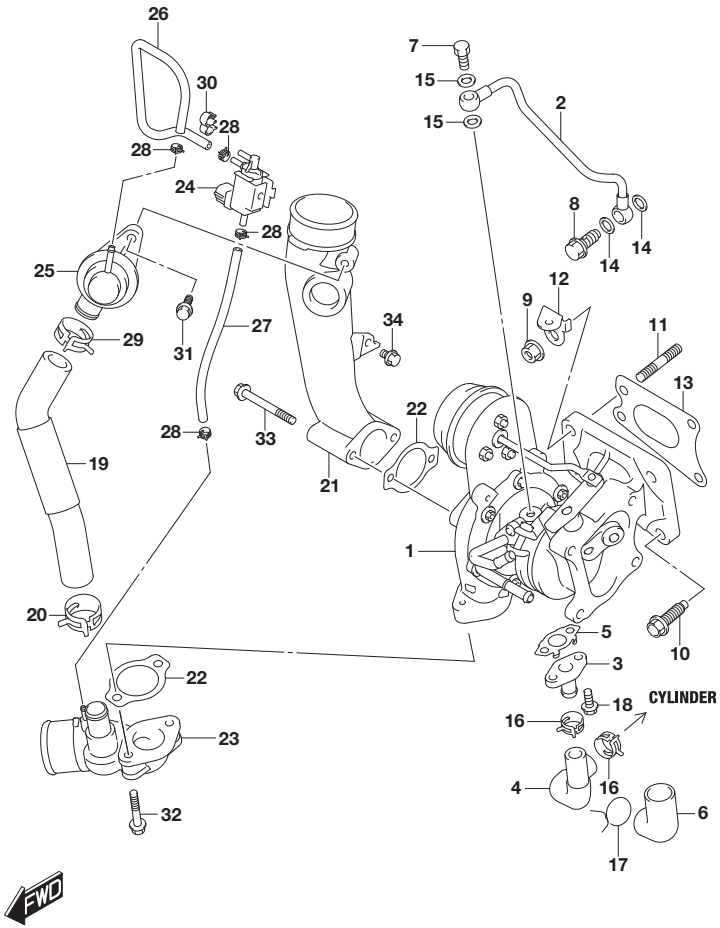

FIG.158A (1-F-7) TURBO CHARGER (K10C)

REF NO.	PART NO.	DESCRIPTION	Q'TY	REMARKS
1	13900-50R01	CHARGER ASSY, TURBO	1	
2	13930-50R00	PIPE, TURBO OIL INTK	1	
3	13940-76JA0	JOINT, OIL DRAIN	1	
4	13941-50R00	HOSE, TURBO OIL DRAIN	1	
5	13945-50R00	GASKET, OIL DRAIN	1	
6	13947-50R00	PROTECTOR	1	
7	13948-85560	BOLT, UNION (8X20)	1	
8	13948-86PA0	BOLT, UNION	1	
9	14117-86P00	NUT, TC	2	
10	14118-86P00	BOLT, TC	2	
11	14119-86P00	STUD BOLT T/C	2	
12	14144-86P00	BRACKET, COVER	1	
13	14181-86P00	GASKET, TURBO CHARGER	1	
14	09161-10009	WASHER (10X15X1.5)	2	
15	09168-08016	GASKET (8.2X14X1)	2	
16	09401-15404	CLIP (ID:15.5)	2	
17	09401-16301	CLIP (ID:16)	1	
18	01550-0616A	BOLT	2	
19	13923-64R00	HOSE, ABV INLET	1	
20	13924-68H50	CLIP, ABV HOSE	1	
21	13950-64R00	PIPE, TURBO INLET AIR	1	
22	13955-75F50	GASKET, INTK AIR PIPE	2	
23	13960-64R00	PIPE, TURBO OUTLET AIR	1	
24	18114-80F00	VALVE, ABV CONT	1	
25	18119-65H70	VALVE, AIR BYPASS	1	
26	18123-64R00	HOSE, ABV CONT	1	
27	18124-64R00	HOSE, ABV CONT	1	
28	09401-06405	CLIP (ID:6.8)	4	
29	09401-24402	CLIP	1	
30	09408-00033	CLAMP (ID:7.2X2)	1	
31	01550-0625A	BOLT	1	
32	01550-0640A	BOLT	2	
33	01550-0660A	BOLT	2	
34	02162-0508A	SCREW	1	

FIG.158B

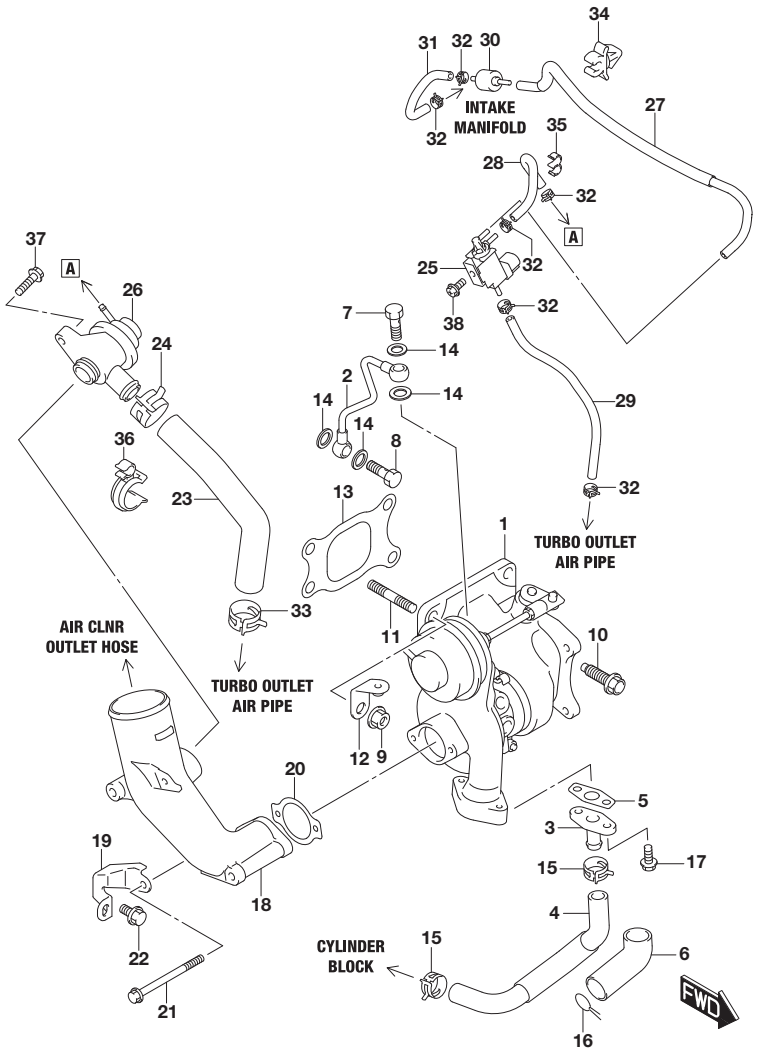

FIG.158B (1-F-8) TURBO CHARGER (K14C)

REF NO.	PART NO.	DESCRIPTION	Q'TY	REMARKS
1	13900-86P01	CHARGER ASSY, TURBO	1	
2	13930-86P00	PIPE, TURBO OIL INTK	1	
3	13940-86P00	JOINT, OIL DRAIN	1	
4	13941-86P00	HOSE, TURBO OIL DRAIN	1	TURBO CHARGER TO CYLINDER BLOCK
5	13945-86P00	GASKET, OIL DRAIN	1	
6	13947-50R00	PROTECTOR	1	
7	13948-86PA0	BOLT, UNION	1	
8	13948-86P00	BOLT, UNION	1	
9	14117-86P00	NUT, TC	2	
10	14118-86P00	BOLT, TC	2	
11	14119-86P00	STUD BOLT T/C	2	
12	14144-86P00	BRACKET, COVER	1	
13	14181-86P00	GASKET, TURBO CHARGER	1	
14	09161-10009	WASHER (10X15X1.5)	4	
15	09401-15404	CLIP (ID:15.5)	2	
16	09401-16301	CLIP (ID:16)	1	
17	01550-0616A	BOLT	2	
18	13950-61MA0	PIPE, TURBO INLET AIR	1	AIR CLNR OUTLET HOSE TO TURBO CHARGER
19	13951-68M00	BRACKET, TURBO INLET PIPE	1	
20	13955-75F50	GASKET, INTK AIR PIPE	1	
21	01550-0685A	BOLT	2	
22	01550-0812A	BOLT	1	
23	13923-61MA0	HOSE, ABV INLET	1	TURBO OUTLET AIR PIPE TO BYPASS VALVE
24	13924-68H50	CLIP, ABV HOSE	1	
25	18114-80F00	VALVE, ABV CONT	1	
26	18119-65H70	VALVE, AIR BYPASS	1	
27	18122-61MA0	HOSE, ABV CONT	1	
28	18123-61MA0	HOSE, ABV CONT	1	
29	18124-61MA0	HOSE, ABV CONT VSV TO PIPE	1	TURBO OUTLET AIR PIPE ABV CONT VALVE
30	95569-78040	VALVE, CHECK	1	
31	09355-35002-100	HOSE (3.5X7.5X100)	1	INTAKE MANIFOLD TO CHECK VALVE
32	09401-06405	CLIP (ID:6.8)	6	

FIG.158B

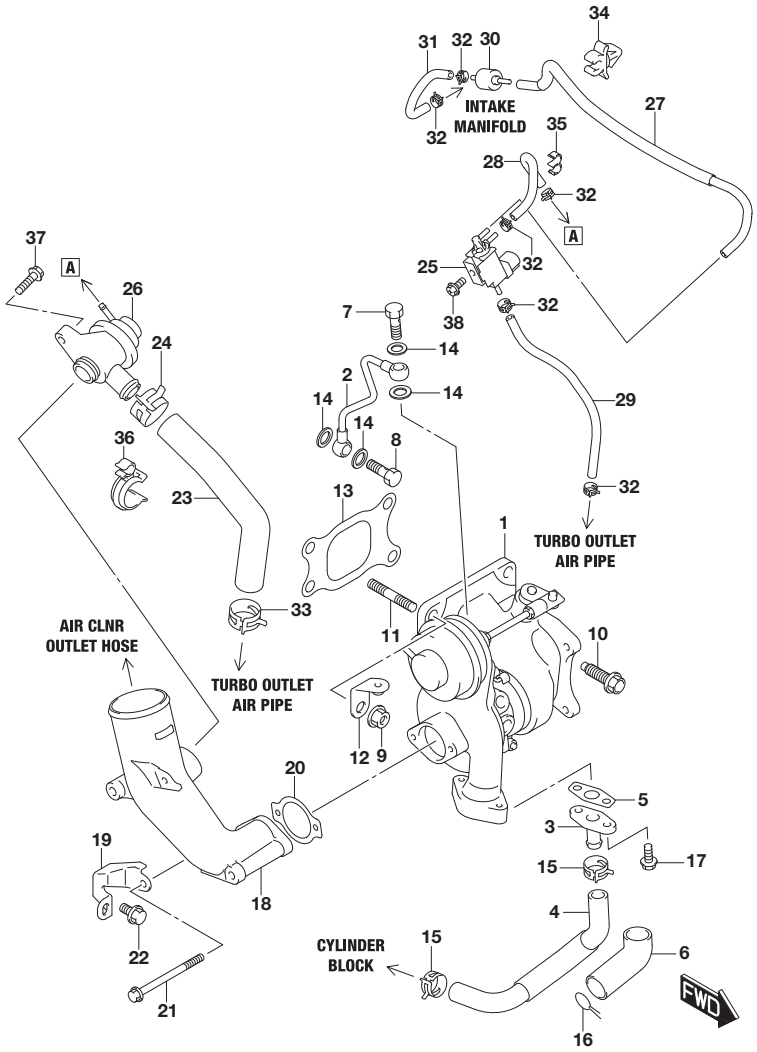

FIG.158B (1-F-9) TURBO CHARGER (K14C)

REF NO.	PART NO.	DESCRIPTION	Q'TY	REMARKS
33	09401-24402	CLIP	1	
34	09403-08315	CLAMP (ID:7)	1	
35	09408-00033	CLAMP (ID:7.2X2)	1	
36	09408-00294	CLAMP	1	
37	01550-0625A	BOLT	1	
38	02162-0508A	SCREW	1	

FIG.158C

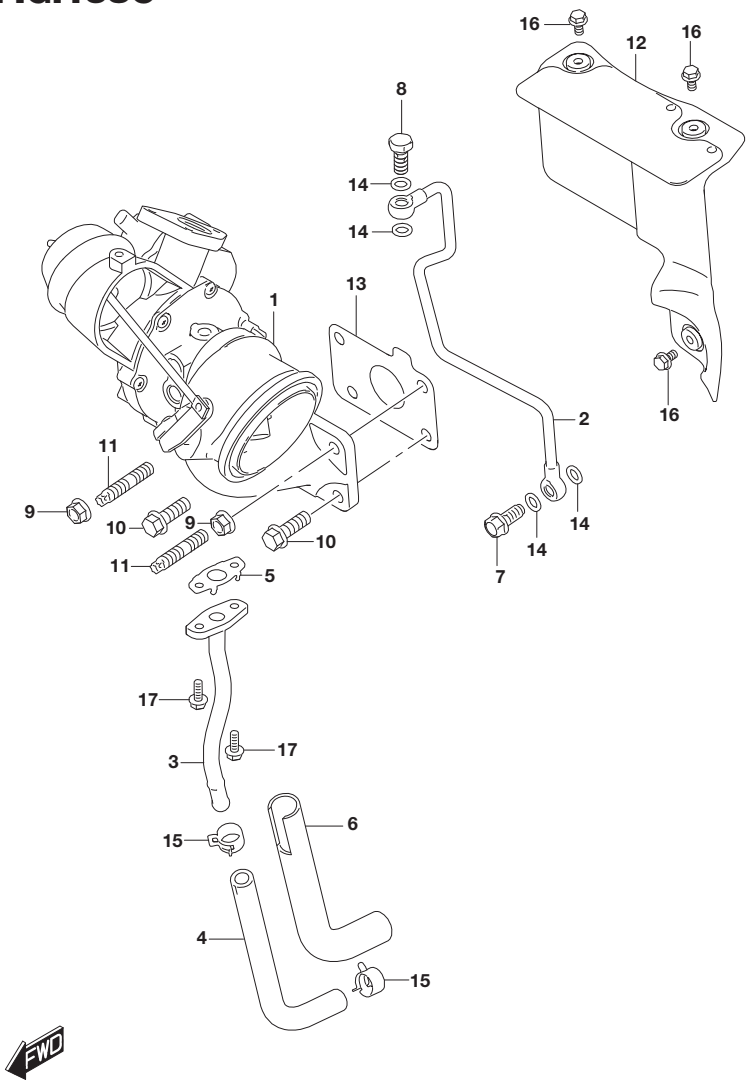

FIG.158C (1-F-10) TURBO CHARGER (K14D)

REF NO.	PART NO.	DESCRIPTION	Q'TY	REMARKS
1	13900-53SA0	CHARGER ASSY, TURBO	1	
2	13930-53SA0	PIPE, TURBO OIL INTK	1	
3	13940-53SA0	JOINT, OIL DRAIN	1	
4	13941-53SA0	HOSE, TURBO OIL DRAIN	1	
5	13945-86P00	GASKET, OIL DRAIN	1	
6	13947-53SA0	PROTECTOR	1	
7	13948-86PA0	BOLT, UNION	1	
8	13948-86P00	BOLT, UNION	1	
9	14117-86P00	NUT, TC	2	
10	14118-86P00	BOLT, TC	2	
11	14119-86P00	STUD BOLT T/C	2	
12	14120-53SA0	COVER, TURBO CHARGER	1	
13	14181-53SA0	GASKET, TURBO CHARGER	1	
14	09161-10009	WASHER (10X15X1.5)	4	
15	09401-15404	CLIP (ID:15.5)	2	
16	01550-0612C	BOLT	3	
17	01550-0616A	BOLT	2	

APK414-3 P22 158C
TURBO CHARGER (3)

FIG.159A

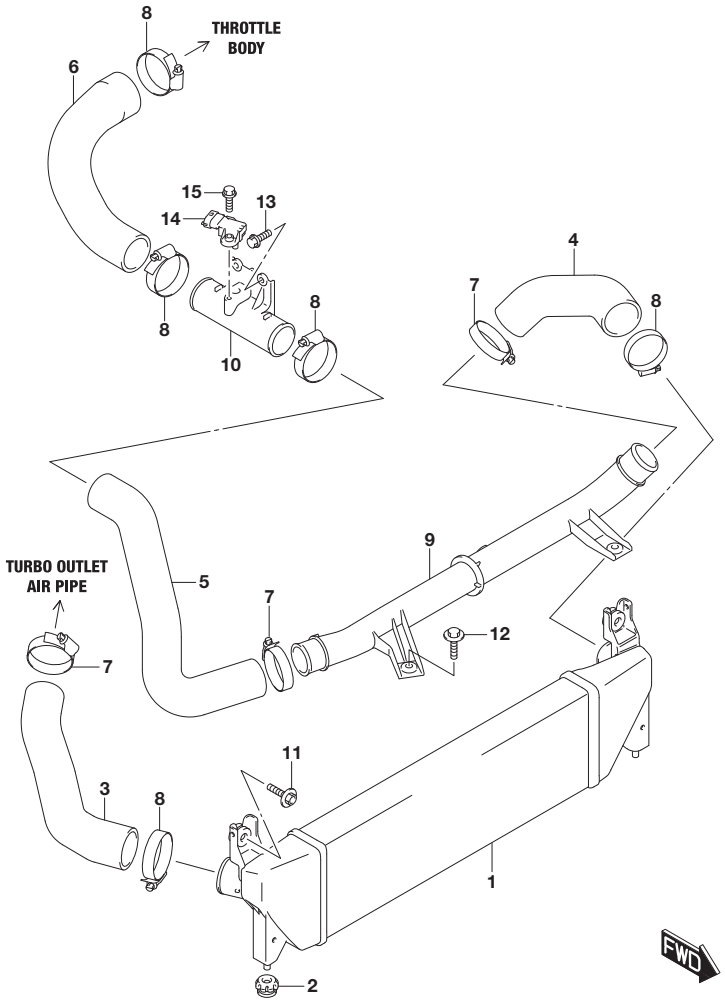

FIG.159A (1-F-11) INTER COOLER (K10C)

REF NO.	PART NO.	DESCRIPTION	Q'TY	REMARKS
1	13620-61MA0	COOLER, INTER	1	
2	13626-61MA0	GROMMET, INTER COOLER	2	
3	13661-64R10	HOSE, INTER COOLER INLET	1	INTER COOLER TO TURBO OUTLET AIR PIPE
4	13662-64R00	HOSE, INTER COOLER OUTLET NO.1	1	
5	13663-64R00	HOSE, INTER COOLER OUTLET NO.2	1	
6	13664-64R00	HOSE, INTER COOLER OUTLET NO.3	1	THROTTLE BODY TO INTER COOLER OUTLET PIPE
7	13891-79J80	CLAMP, INTER COOLER HOSE	3	
8	13894-68L50	CLAMP	5	
9	13970-64R00	PIPE, INTER COOLER OUTLET	1	
10	13981-64R00	PIPE, INTER COOLER OUTLET	1	
11	09116-06185	BOLT (6X30)	2	
12	09136-06141	SCREW (6X25)	2	
13	01550-0620A	BOLT	2	
14	18590-68M20	SENSOR ASSY, PRESSURE	1	
15	01550-0620C	BOLT	1	

FIG.159B

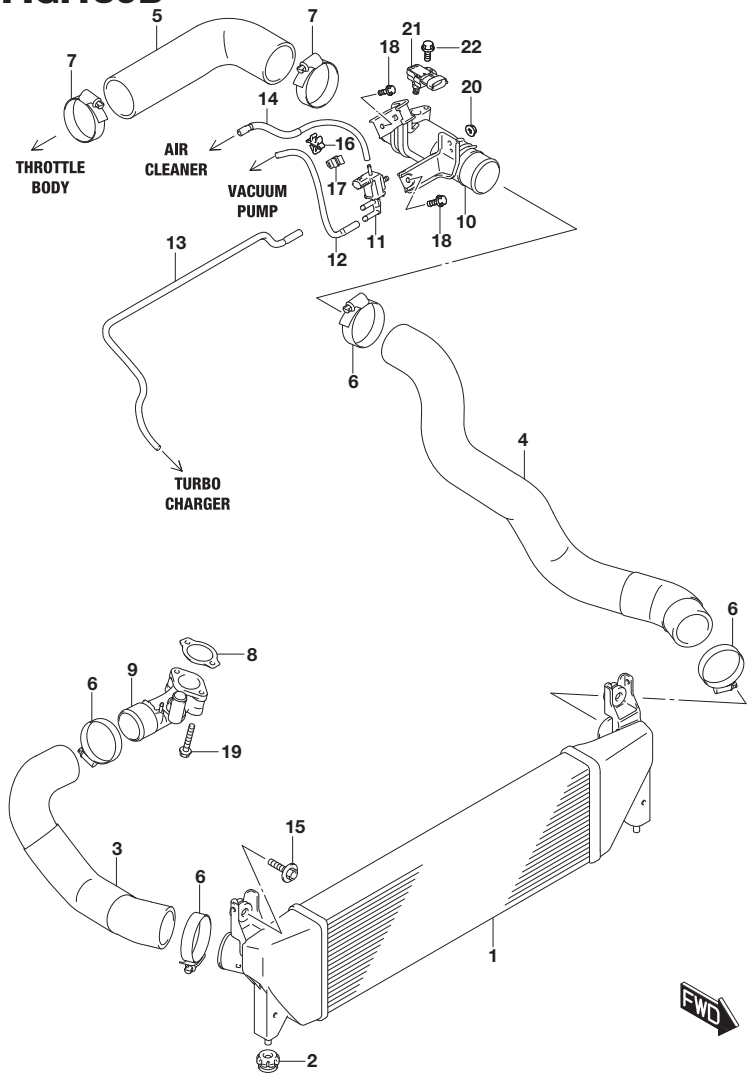

FIG.159B (1-F-12) INTER COOLER (K14C)

REF NO.	PART NO.	DESCRIPTION	Q'TY	REMARKS
1	13620-61MA0	COOLER, INTER	1	
2	13626-61MA0	GROMMET, INTER COOLER	2	
3	13661-60R10	HOSE, INTER COOLER INLET	1	
4	13662-61MA0	HOSE, INTER COOLER OUTLET NO.1	1	
5	13663-61MA0	HOSE, INTER COOLER OUTLET NO.2	1	THROTTLE BODY TO INTER COOLER OUTLET PIPE
6	13892-79J80	CLAMP, INTER COOLER HOSE	4	
7	13894-68L50	CLAMP	2	
8	13955-75F50	GASKET, INTK AIR PIPE	1	
9	13960-61MA0	PIPE, TURBO OUTLET AIR	1	
10	13970-68M00	PIPE, INTER COOLER OUTLET	1	
11	18117-68M00	VALVE, WASTEGATE CONT	1	
12	18126-61MA1	HOSE, WG CONT	1	WASTEGATE CONT TO VACUUM PUMP
13	18127-61MA1	HOSE, WG CONT	1	WASTEGATE CONT TO TURBO CHARGER
14	18129-61MA1	HOSE, WG CONT VSV TO FLTR	1	WASTEGATE CONT TO AIR CLEANER
15	09116-06185	BOLT (6X30)	2	
16	09403-08315	CLAMP (ID:7)	1	
17	09403-08315	CLAMP (ID:7)	1	
18	01550-0616A	BOLT	2	
19	01550-0650A	BOLT	2	
20	08316-1006A	NUT	1	
21	18590-68M20	SENSOR ASSY, PRESSURE	1	
22	01550-0616C	BOLT	1	

APK414-3 P22 159B
INTER COOLER (2)

FIG.159C

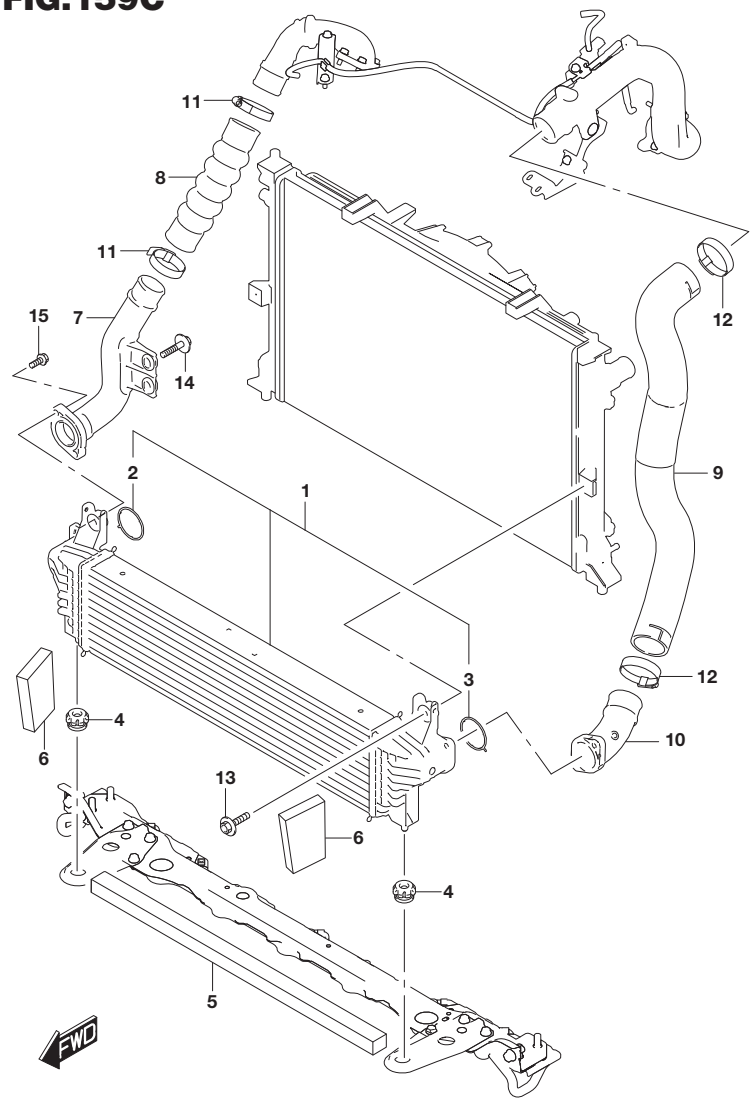

FIG.159C (1-F-13) INTER COOLER (K14D)

REF NO.	PART NO.	DESCRIPTION	Q'TY	REMARKS
1	13620-74S00	COOLER, INTER	1	
2	13621-74S00	.PACKING	1	
3	13622-74S00	.PACKING	1	
4	13626-61MA0	GROMMET, INTER COOLER	2	
5	13643-74S00	SEAL, INTER COOLER NO.1	1	
6	13644-74S00	SEAL, INTER COOLER NO.2	2	
7	13660-74S00	PIPE, INTER COOLER INLET	1	
8	13661-74S00	HOSE, INTER COOLER INLET	1	
9	13662-74S00	HOSE, INTER COOLER OUTLET	1	
10	13670-74S00	PIPE, INTER COOLER OUTLET	1	
11	13891-79J80	CLAMP, INTER COOLER HOSE	2	
12	13892-79J80	CLAMP, INTER COOLER HOSE	2	
13	09116-06185	BOLT (6X30)	2	
14	09136-06141	SCREW (6X25)	2	
15	01550-0625A	BOLT	4	

APK414-3 P22 159C
INTER COOLER (3)

FIG.160A

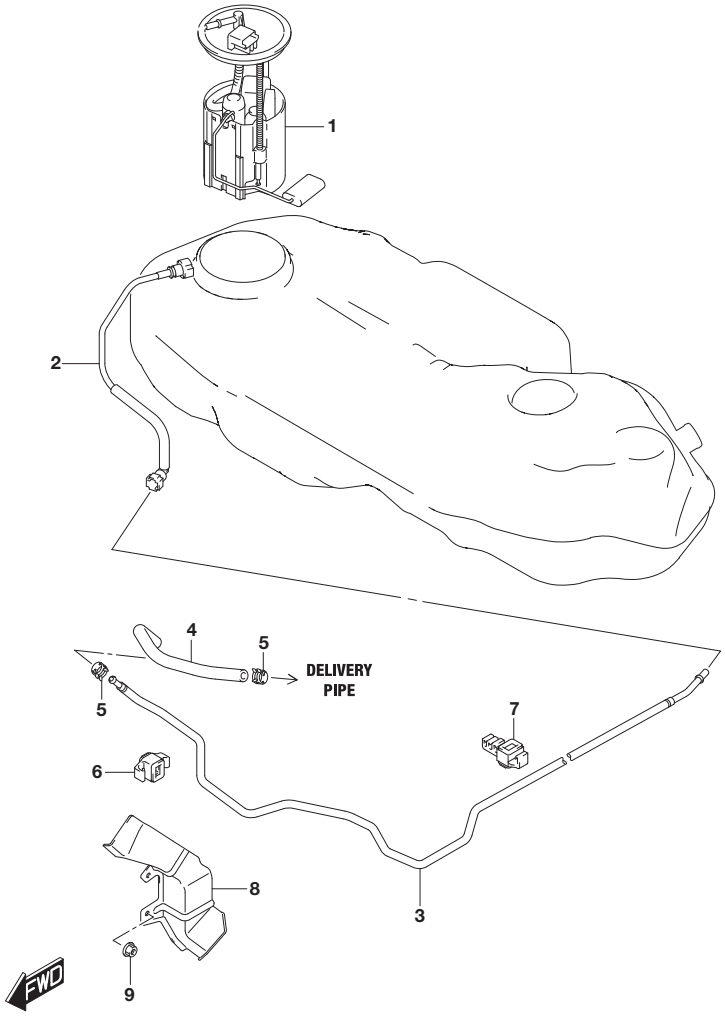

FIG.160A (1-F-14) FUEL PUMP (K10C)

REF NO.	PART NO.	DESCRIPTION	Q'TY	REMARKS
1	15100-64R00	PUMP ASSY, FUEL	1	
2	15812-61M00	PIPE, FUEL	1	
3	15811-54P00	PIPE, FUEL FEED	1	
4	15815-64R00	HOSE, FUEL FEED	1	DELIVERY PIPE TO FUEL PIPE
5	09401-13434	CLIP	2	
6	15891-61M00	CLAMP, FUEL PIPE	3	
7	15892-61M00	CLAMP, FUEL PIPE	4	
8	15873-61M00	PROTECTOR, FUEL PIPE	1	
9	09159-06076	NUT	2	

APK414-3 P22 160A
FUEL PUMP (1)

FIG.160B

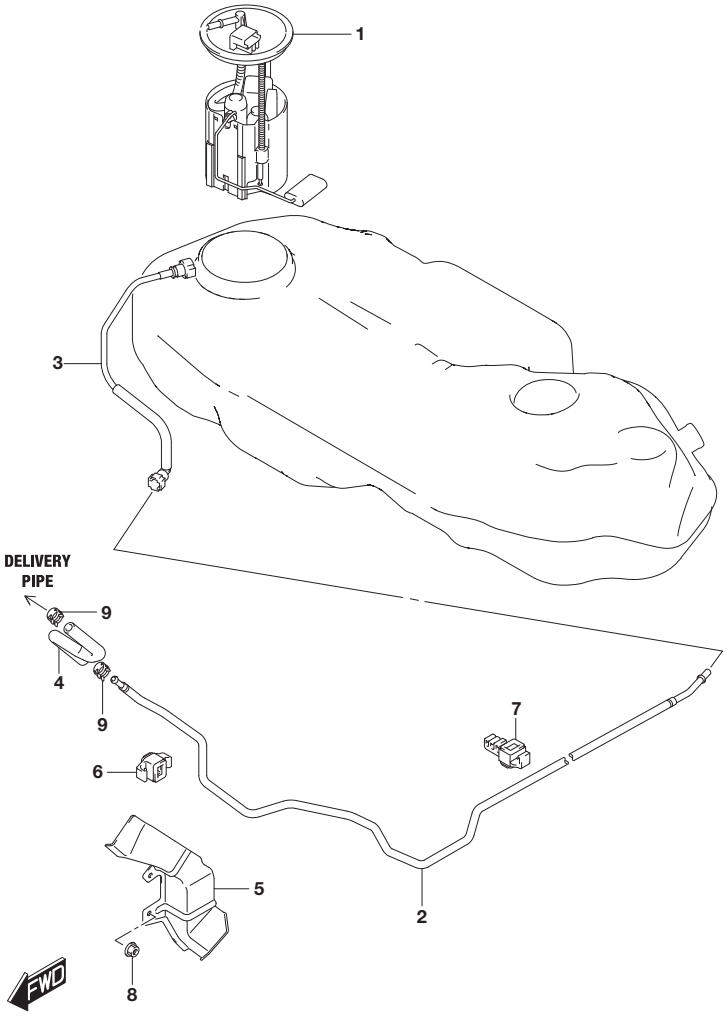

FIG.160B (1-G-2) FUEL PUMP (K14C)

REF NO.	PART NO.	DESCRIPTION	Q'TY	REMARKS
1	15100-60R00	PUMP ASSY, FUEL	1	
2	15811-54P00	PIPE, FUEL FEED	1	
3-1	15812-61M00	PIPE, FUEL	1	TYPE 3
3-2	15812-61M10	PIPE, FUEL	1	TYPE 4
4	15815-60R00	HOSE, FUEL FEED	1	DELIVERY PIPE TO FUEL PIPE
5	15873-61M00	PROTECTOR, FUEL PIPE	1	
6-1	15891-61M00	CLAMP, FUEL PIPE	3	TYPE 3
6-2	15891-74S00	CLAMP, FUEL PIPE	3	TYPE 4
7-1	15892-61M00	CLAMP, FUEL PIPE	4	TYPE 3
7-2	15892-74S00	CLAMP, FUEL PIPE	4	TYPE 4
8	09159-06076	NUT	2	
9-1	09401-13419	CLIP (ID:13.1)	2	TYPE 3
9-2	09401-13434	CLIP	2	TYPE 4

APK414-3 P22 160B
FUEL PUMP (2)

FIG.160C

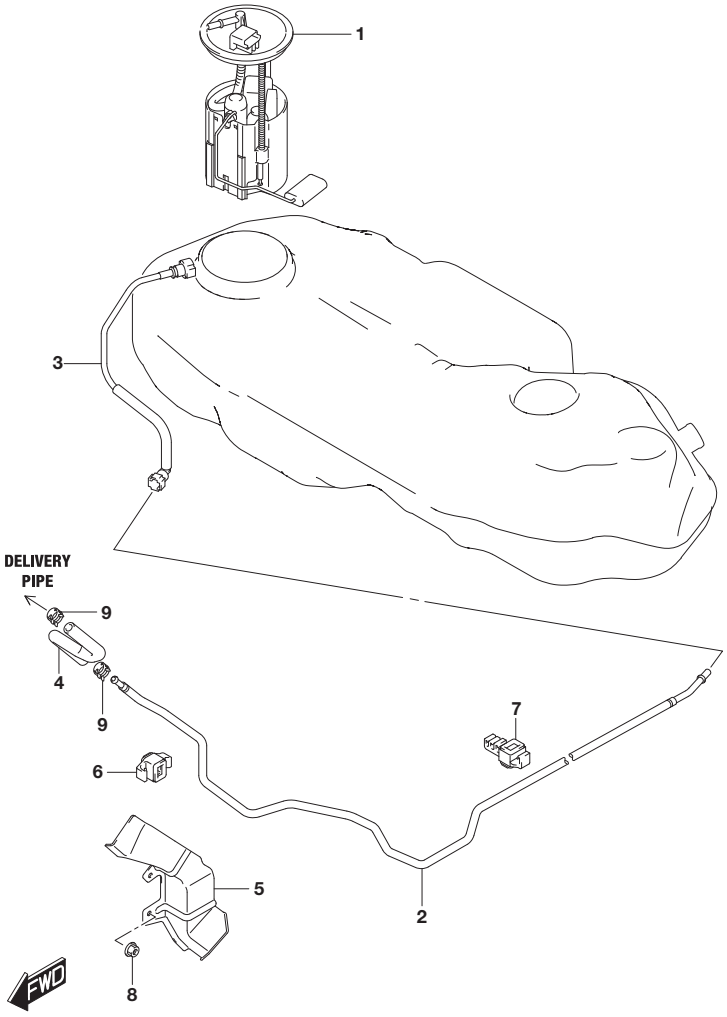

FIG.160C (1-G-3) FUEL PUMP (K14D)

REF NO.	PART NO.	DESCRIPTION	Q'TY	REMARKS
1	15100-60R00	PUMP ASSY, FUEL	1	
2	15811-54P00	PIPE, FUEL FEED	1	
3	15812-61M10	PIPE, FUEL	1	
4	15815-60R00	HOSE, FUEL FEED	1	DELIVERY PIPE TO FUEL PIPE
5	15873-61M00	PROTECTOR, FUEL PIPE	1	
6	15891-74S00	CLAMP, FUEL PIPE	3	
7	15892-74S00	CLAMP, FUEL PIPE	4	
8	09159-06076	NUT	2	
9	09401-13434	CLIP	2	

APK414-3 P22 160C
FUEL PUMP (3)

FIG.172A

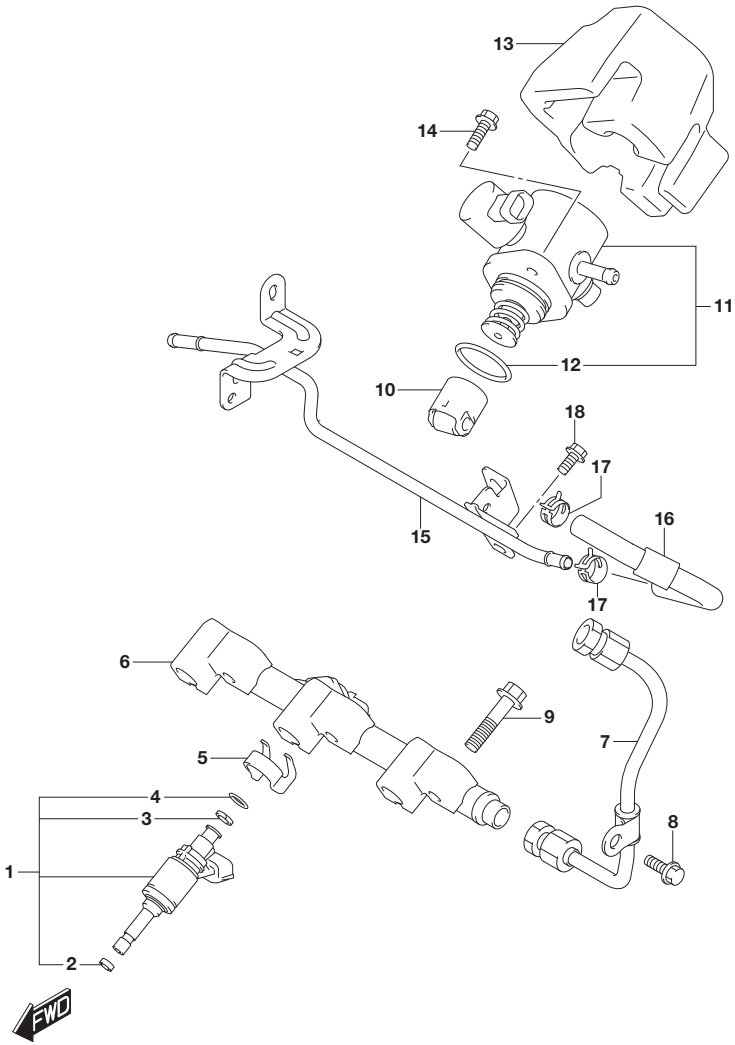

FIG.172A (1-G-4) DELIVERY PIPE/FUEL INJECTOR (K10C)

REF NO.	PART NO.	DESCRIPTION	Q'TY	REMARKS
1	15710-68M10	INJECTOR ASSY, FUEL	3	
2	15711-68M00	.SEAL, TIP	3	
3	15712-68M00	.RING, BACK UP	3	
4	15713-68M00	.O RING	3	
5	15715-68M00	CLIP, FUEL INJECTOR	3	
6	15700-50811	PIPE SET, FUEL PIPE	1	
7	15840-68M00	PIPE, FUEL	1	
8	01550-0616C	BOLT	1	
9	01550-0835A	BOLT	3	
10	12729-68M00	TAPPET, FUEL PUMP	1	
11	15210-68M00	PUMP ASSY, FUEL HIGH PRESSURE	1	
12	15212-68M00	.O RING	1	
13	15215-64R00	COVER, FUEL HIGH PRESSURE PUMP	1	
14	09103-06267	BOLT (6X18)	2	
15	15850-64R00	PIPE, FUEL	1	
16	15855-64R00	HOSE, FUEL	1	
17	09401-13419	CLIP (ID:13.1)	2	
18	01550-0612A	BOLT	1	

FIG.172B

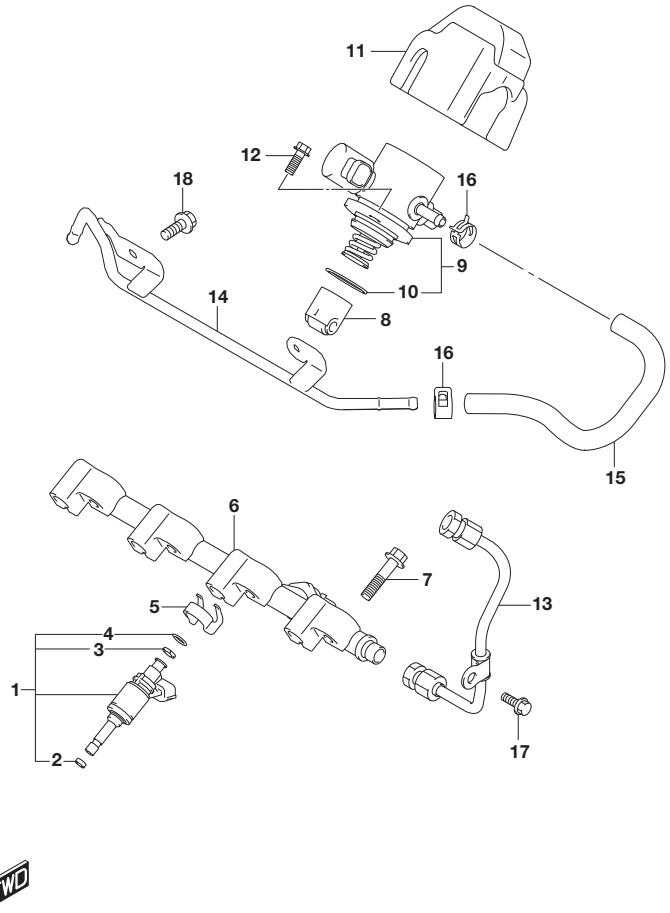

FIG.172B (1-G-5) DELIVERY PIPE/FUEL INJECTOR (K14C)

REF NO.	PART NO.	DESCRIPTION	Q'TY	REMARKS
1	15710-68M10	INJECTOR ASSY, FUEL	4	
2	15711-68M00	.SEAL, TIP	4	
3	15712-68M00	.RING, BACK UP	4	
4	15713-68M00	.O RING	4	
5	15715-68M00	CLIP, FUEL INJECTOR	4	
6	15700-68811	PIPE SET, FUEL DELIVERY	1	
7	01550-0835A	BOLT	4	
8	12729-68M00	TAPPET, FUEL PUMP	1	
9	15210-68M00	PUMP ASSY, FUEL HIGH PRESSURE	1	
10	15212-68M00	.O RING	1	
11	15215-61MA0	COVER, FUEL HIGH PRESSURE PUMP	1	
12	09103-06267	BOLT (6X18)	2	
13	15840-68M00	PIPE, FUEL	1	
14	15850-61MA0	PIPE, FUEL ENG SIDE	1	
15	15855-61MA0	HOSE, FUEL	1	
16	09401-13419	CLIP (ID:13.1)	2	
17	01550-0616A	BOLT	1	
18	01550-0816A	BOLT	2	

APK414-3 P22 172B
DELIVERY PIPE/FUEL INJECTOR (2)

FIG.172C

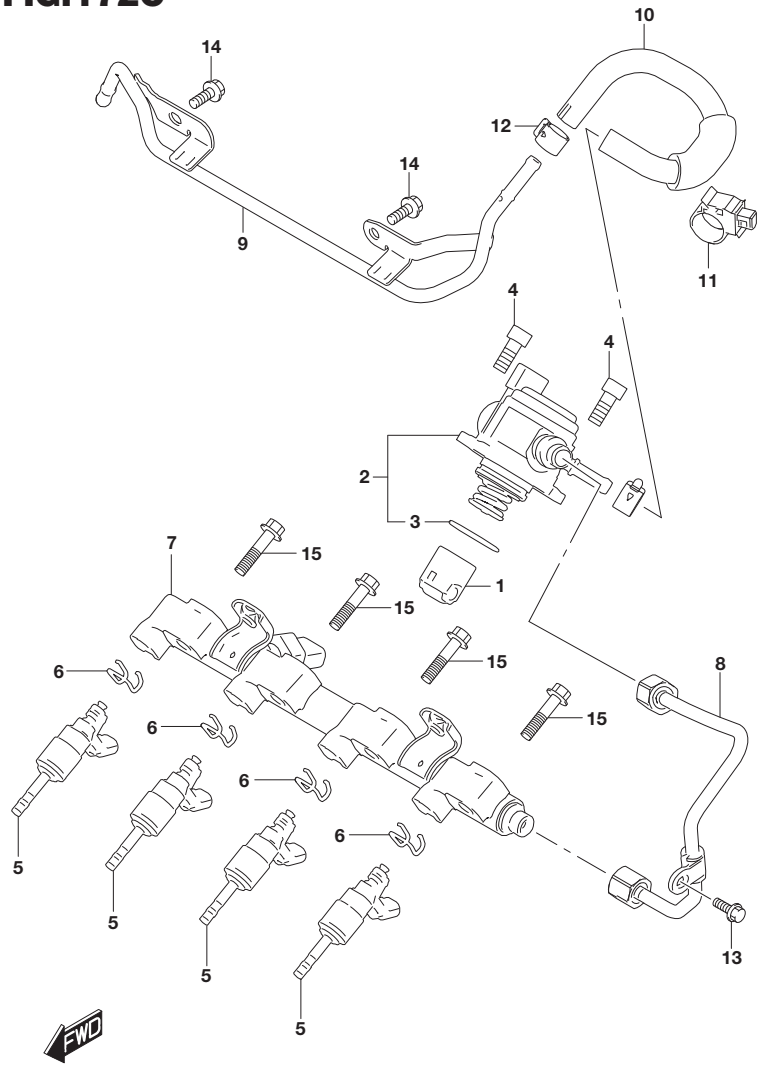

FIG.172C (1-G-6) DELIVERY PIPE/FUEL INJECTOR (K14D)

REF NO.	PART NO.	DESCRIPTION	Q'TY	REMARKS
1	12729-68M00	TAPPET, FUEL PUMP	1	
2	15210-53S00	PUMP ASSY, FUEL HIGH PRESSURE	1	
3	15212-53S00	.O RING	1	
4	07130-0820B	BOLT	2	
5	15710-53S00	INJECTOR ASSY, FUEL	4	
6	15715-53S00	CLIP, FUEL INJECTOR	4	
7	15700-53S00	PIPE SET, FUEL DELIVERY	1	
8	15840-53SA0	PIPE, FUEL	1	
9	15850-53SA0	PIPE, FUEL	1	
10	15855-53SB0	HOSE, FUEL	1	
11	15895-81P00	CLAMP, FUEL HOSE	1	
12	09401-11433	CLIP	2	
13	01550-0616A	BOLT	1	
14	01550-0816A	BOLT	2	
15	01550-1045A	BOLT	4	

FIG.176A

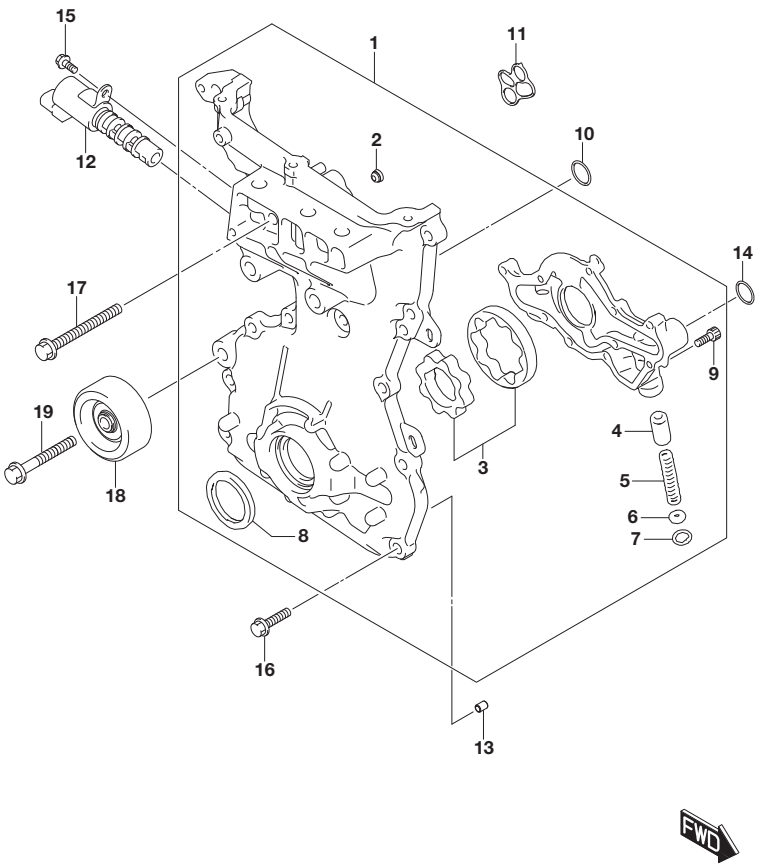

FIG.176A (1-G-7) OIL PUMP (K10C)

REF NO.	PART NO.	DESCRIPTION	Q'TY	REMARKS
1	16100-50RB0	PUMP ASSY, OIL	1	
2	16116-69GE0	.FILTER, OIL GALLERY	1	
3	16130-50R00	.ROTOR SET, OIL PUMP	1	
4	16151-68M00	.VALVE, OIL PUMP RELIEF	1	
5	16152-68M00	.SPRING, OIL RELIEF	1	
6	09169-05024	.WASHER	1	
7	08331-4115A	.CIRCLIP	1	
8	09283-41002	.OIL SEAL (41X53X6)	1	
9	07130-0625A	.BOLT	10	
10	16115-50M00	O RING, MAIN GALLERY	1	
11	16118-50R00	O RING, OCV	1	
12	16550-51KA0	VALVE, OIL CONTROL	1	
13	09206-06005	PIN (4X6X11)	2	
14	09280-17002	O RING (D:2.4,ID:16.8)	1	
15	01550-0612A	BOLT	1	
16	01550-0830C	BOLT	15	
17	01550-0890A	BOLT	1	
18	17530-68PB0	PULLEY, BELT	1	
19	09103-10727	BOLT (10X75)	1	

FIG.176B

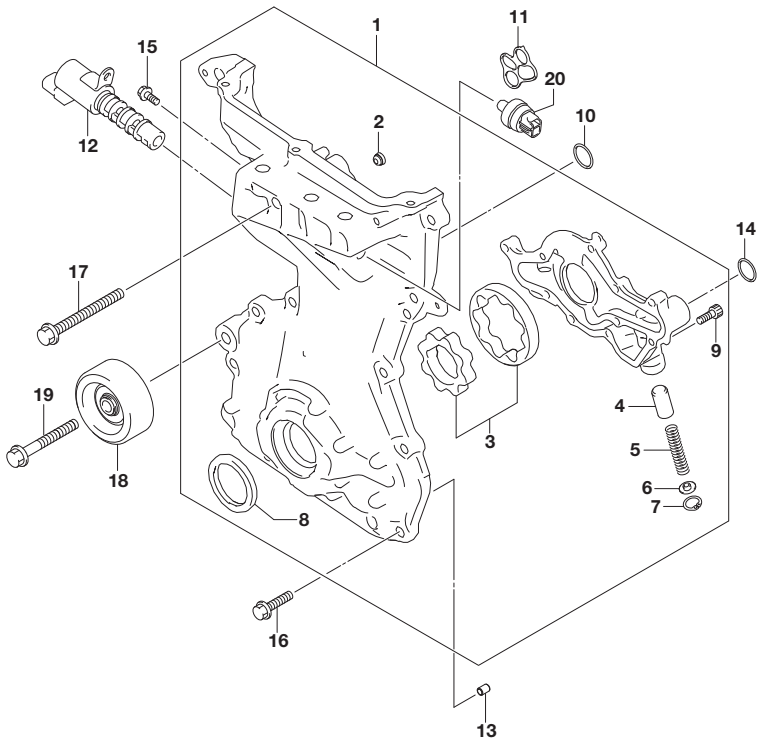

FIG.176B (1-G-8) OIL PUMP (K14C)

REF NO.	PART NO.	DESCRIPTION	Q'TY	REMARKS
1	16100-68M01	PUMP ASSY, OIL	1	
2	16116-69GE0	.FILTER, OIL GALLERY	1	
3	16130-68M00	.ROTOR SET, OIL PUMP	1	
4	16151-68M00	.VALVE, OIL PUMP RELIEF	1	
5	16152-68M00	.SPRING, OIL RELIEF	1	
6	09169-05024	.WASHER	1	
7	08331-4115A	.CIRCLIP	1	
8	09283-41002	.OIL SEAL (41X53X6)	1	
9	07130-0625A	.BOLT	10	
10	16115-50M00	O RING, MAIN GALLERY	1	
11	16118-68M00	O RING, OCV	1	
12	16550-51KA0	VALVE, OIL CONTROL	1	
13	09206-06005	PIN (4X6X11)	2	
14	09280-17002	O RING (D:2.4,ID:16.8)	1	
15	01550-0612A	BOLT	1	
16	01550-0830C	BOLT	14	
17	01550-0890A	BOLT	1	
18	17530-50M00	PULLEY, BELT TENSIONER	1	
19	01550-1070A	BOLT	1	
20	37820-73HP0	SWITCH ASSY, OIL PRESSURE	1	

FIG.176C

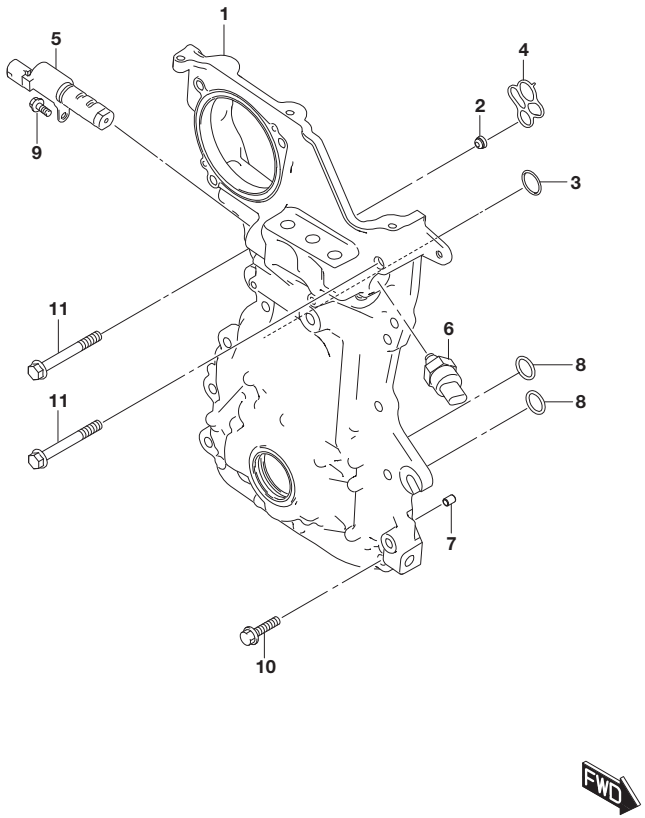

FIG.176C (1-G-9) OIL PUMP (K14D)

REF NO.	PART NO.	DESCRIPTION	Q'TY	REMARKS
1	16100-53S00	PUMP ASSY, OIL	1	
2	16116-69GE0	FILTER, OIL GALLERY	1	
3	16115-50M00	O RING, MAIN GALLERY	1	
4	16118-53S00	O RING, OCV	1	
5	16550-53SA0	VALVE, OIL CONTROL	1	
6	16580-53S00	SENSOR, OIL TEMP & PRESSURE	1	
7	09206-06005	PIN (4X6X11)	2	
8	09280-17002	O RING (D:2.4,ID:16.8)	2	
9	01550-0612A	BOLT	1	
10	01550-0830C	BOLT	13	
11	01550-0870A	BOLT	2	

FIG.180A

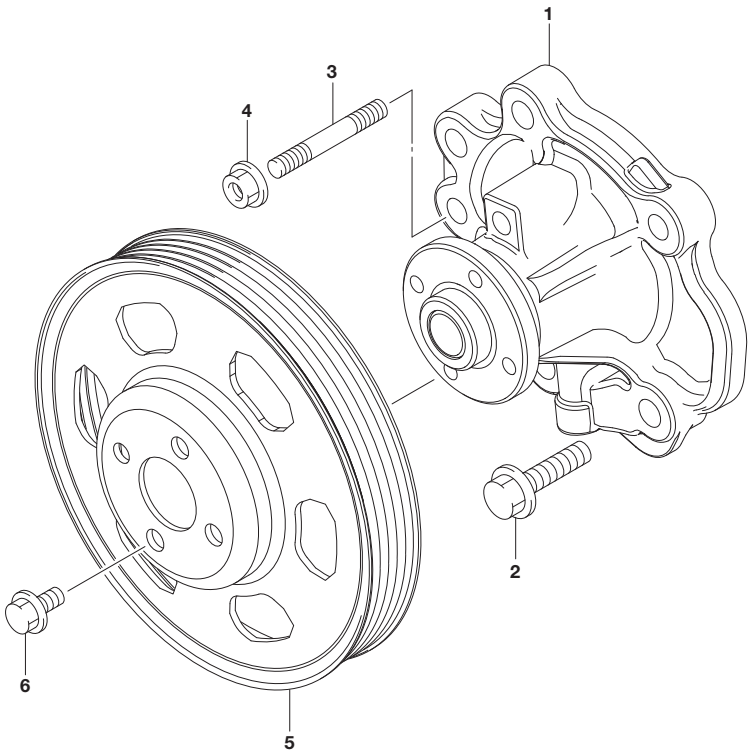

FIG.180A (1-G-10) WATER PUMP (K10C)

REF NO.	PART NO.	DESCRIPTION	Q'TY	REMARKS
1	17400-69L02	PUMP ASSY, WATER	1	
2	01550-0830C	BOLT	4	
3	01421-0835A	STUD BOLT	2	
4	08316-1008A	NUT	2	
5	17511-81PB0	PULLEY, WTR PUMP	1	
6	17512-61P00	BOLT	4	

APK414-3 P22 180A
WATER PUMP (1)

FIG.180B

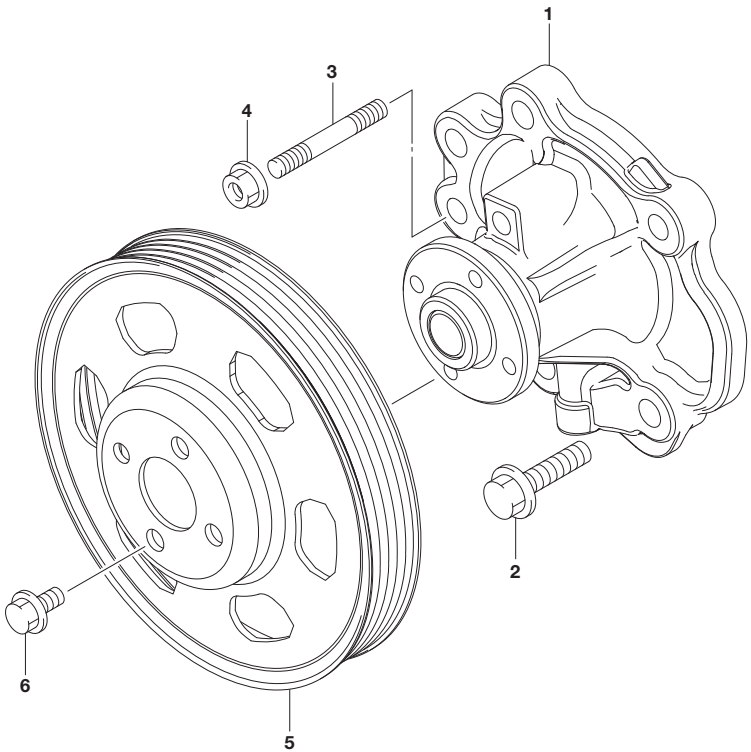

FIG.180B (1-G-11) WATER PUMP (K14C)

REF NO.	PART NO.	DESCRIPTION	Q'TY	REMARKS
1	17400-69L02	PUMP ASSY, WATER	1	
2	01550-0830C	BOLT	4	
3	01421-0835A	STUD BOLT	2	
4	08316-1008A	NUT	2	
5	17511-68M00	PULLEY, WTR PUMP	1	
6	17512-61P00	BOLT	4	

FIG.180C

FIG.180C (1-G-12) WATER PUMP (K14D)

REF NO.	PART NO.	DESCRIPTION	Q'TY	REMARKS
1	17400-53S00	PUMP ASSY, WATER	1	
2	17417-53S00	O RING, WTR PUMP	1	
3	17511-53S00	PULLEY, WTR PUMP	1	
4	17512-61P00	BOLT	4	
5	09206-06005	PIN (4X6X11)	2	
6	01550-0830A	BOLT	3	
7	01550-0840A	BOLT	2	

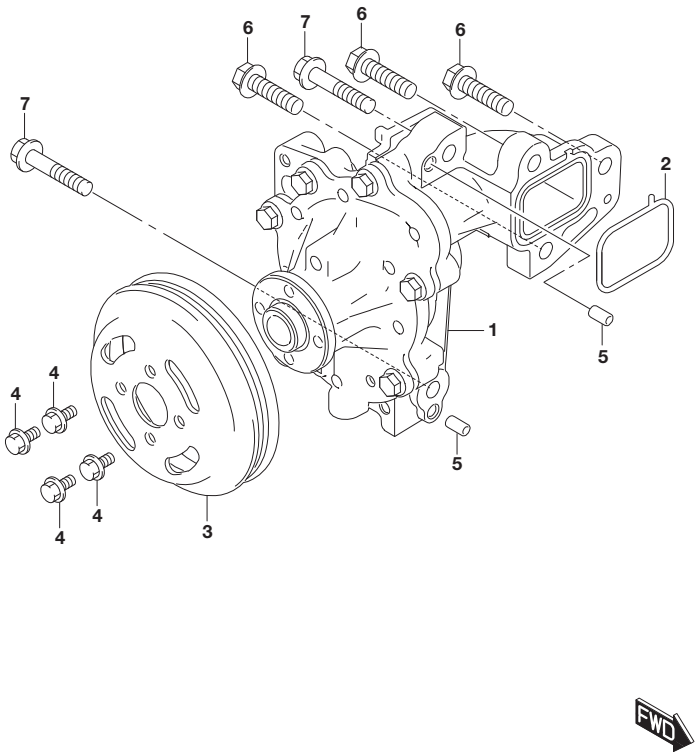

FIG.184A

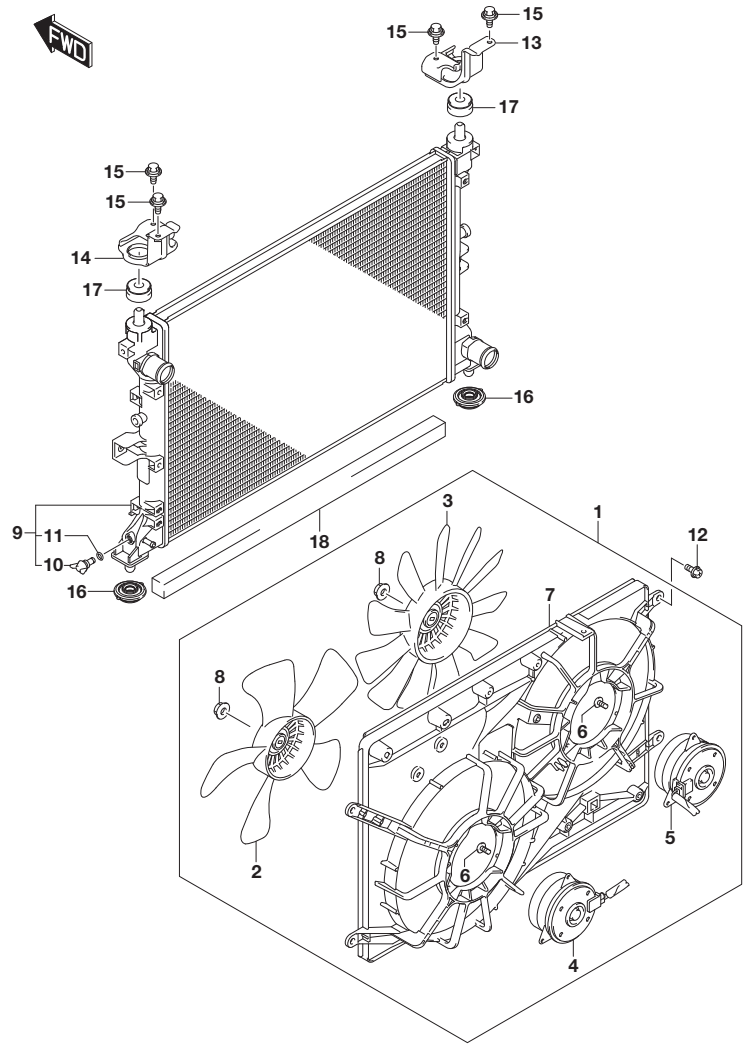

FIG.184A (1-G-13) RADIATOR (K10C)

REF NO.	PART NO.	DESCRIPTION	Q'TY	REMARKS
1	17100-60R00	FAN ASSY, ENGINE COOLING	1	
2	17111-60R00	.FAN ASSY	1	
3	17111-60R10	.FAN ASSY	1	
4	17120-60R00	.MOTOR ASSY, COOLING FAN	1	
5	17120-60R10	.MOTOR ASSY, COOLING FAN	1	
6	17129-56F00	.SCREW, FAN MOTOR (5X11)	6	
7	17760-60R00	.SHROUD ASSY, FAN	1	
8	08316-2005A	.NUT	2	
9	17700-60R00	RADIATOR ASSY	1	
10	17751-61A00	.PLUG, DRAIN	1	
11	17759-82K00	.O RING	1	
12	02162-0616B	SCREW	4	
13	17861-86R00	BRACKET, RDTR SPRT RH	1	
14	17861-86R10	BRACKET, RDTR SPRT LH	1	
15	17863-56S00	BOLT, RDTR SPRT BRACKET	4	
16	17878-54M00	MOUNT, RDTR SPRT LOWER	2	
17	17879-64R00	MOUNT, RDTR SPRT	2	
18	17791-86P00	SEAL, RADIATOR NO.3	1	6AT

FIG.184B

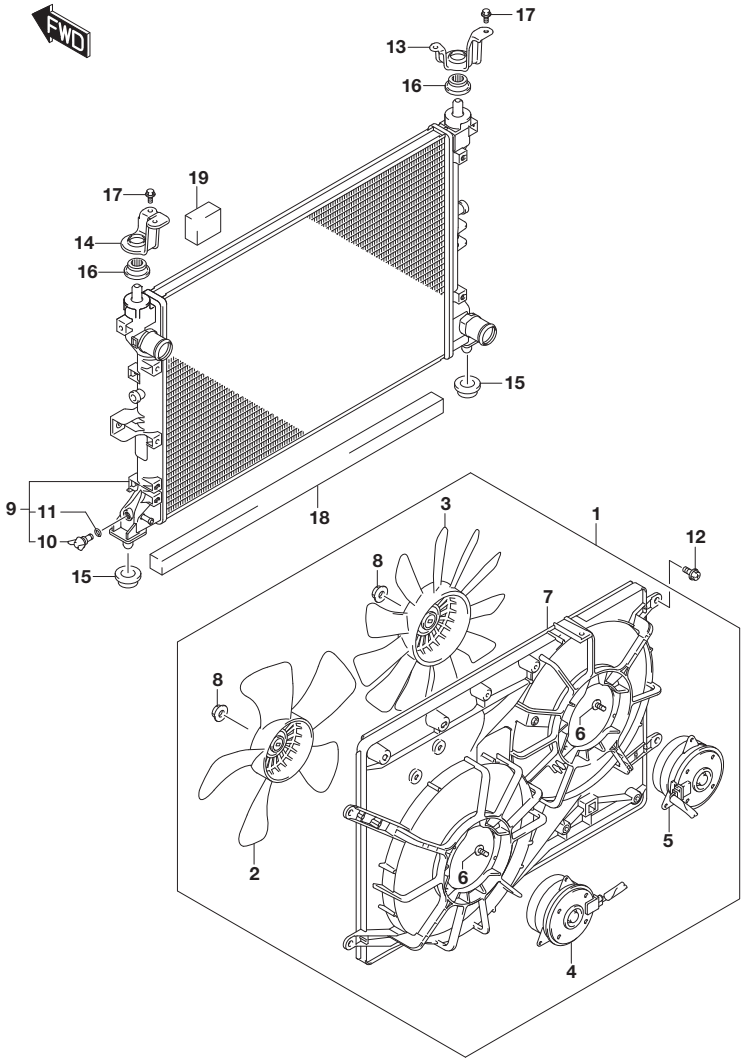

FIG.184B (1-G-14) RADIATOR (K14C)

REF NO.	PART NO.	DESCRIPTION	Q'TY	REMARKS
1	17100-60R00	FAN ASSY, ENGINE COOLING	1	
2	17111-60R00	.FAN ASSY	1	
3	17111-60R10	.FAN ASSY	1	
4	17120-60R00	.MOTOR ASSY, COOLING FAN	1	
5	17120-60R10	.MOTOR ASSY, COOLING FAN	1	
6	17129-56F00	.SCREW, FAN MOTOR (5X11)	6	
7	17760-60R00	.SHROUD ASSY, FAN	1	
8	08316-2005A	.NUT	2	
9-1	17700-60R00	RADIATOR ASSY	1	LABEL:H
9-2	17700-60R10	RADIATOR ASSY	1	LABEL:R
10	17751-61A00	.PLUG, DRAIN	1	
11	17759-82K00	.O RING	1	
12	02162-0616B	SCREW	4	
13	17862-55P00	BRACKET, RDTR SPRT UPR RH	1	
14	17862-55P10	BRACKET, RDTR SPRT UPR LH	1	
15	17879-62J50	MOUNT, DEGASSING TANK	2	
16	17879-79M50	MOUNT, RDTR SPRT UPR	2	
17	17863-56S00	BOLT, RDTR SPRT BRACKET	4	
18	17791-86P00	SEAL, RADIATOR NO.3	1	6AT
19	17792-86P00	SEAL, RADIATOR NO.3	1	6AT

FIG.184C

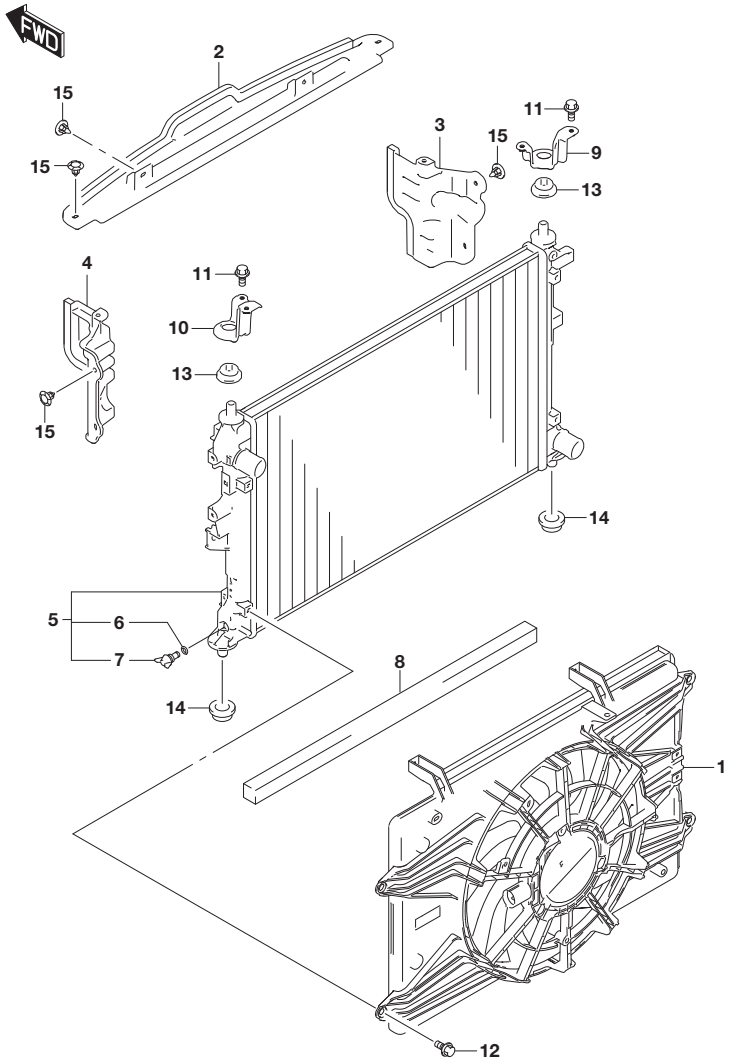

FIG.184C (1-H-2) RADIATOR (K14D)

REF NO.	PART NO.	DESCRIPTION	Q'TY	REMARKS
1	17100-74S00	FAN ASSY, ENG CLG	1	
2	17211-74S00	COVER, RADIATOR UPPER	1	
3	17212-74S00	COVER, RADIATOR RH	1	
4	17213-74S00	COVER, RADIATOR LH	1	
5	17700-76S00	RADIATOR ASSY	1	
6	17751-61A00	.PLUG, DRAIN	1	
7	17759-82K00	.O RING	1	
8	17791-86P00	SEAL, RADIATOR NO.3	1	
9	17862-55P00	BRACKET, RDTR SPRT UPR RH	1	
10	17862-55P10	BRACKET, RDTR SPRT UPR LH	1	
11	17863-56S00	BOLT, RDTR SPRT BRACKET	4	
12	17863-56S00	BOLT, RDTR SPRT BRACKET	4	
13	17879-55P00	MOUNT, RDTR SPRT UPR	2	
14	17879-62J50	MOUNT, DEGASSING TANK	2	
15	09409-07340	CLIP (6.8X11.5)	8	

FIG.188A

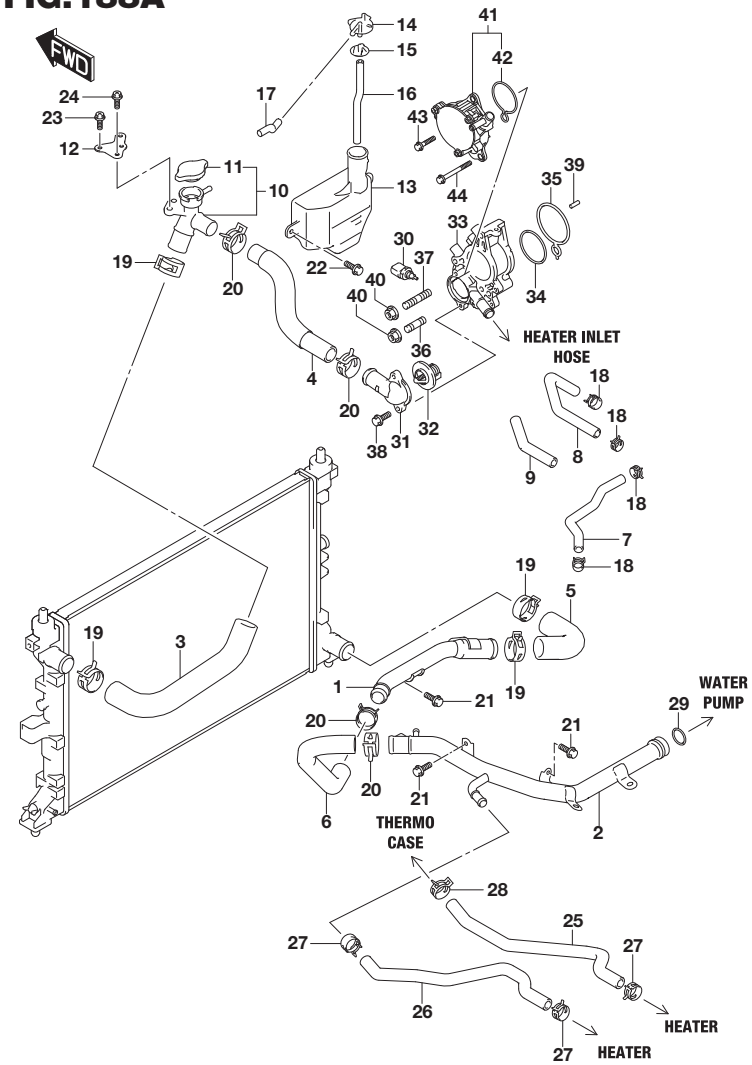

FIG.188A (1-H-3) WATER HOSE (K10C)

REF NO.	PART NO.	DESCRIPTION	Q'TY	REMARKS
1	17830-86P10	PIPE, WTR INLET NO.1	1	
2-1	17830-50R00	PIPE, WTR INLET	1	5MT
2-2	17830-50R10	PIPE, WTR INLET	1	6AT
3	17852-60R00	HOSE, RADIATOR INLET NO.1	1	
4	17853-86R00	HOSE, RADIATOR INLET NO.2	1	
5	17854-60R00	HOSE, RADIATOR OUTLET	1	
6	17855-64R00	HOSE, RADIATOR OUTLET NO.2	1	
7	17864-64R00	HOSE, TURBO TO WTR PIPE	1	TURBO CHARGER TO WATER INLET PIPE
8	17866-64R00	HOSE, HEAD TO TC	1	TURBO CHARGER TO CYLINDER HEAD
9	17867-86P00	PROTECTOR, TC INLET HOSE	1	
10	17910-56P00	NECK ASSY, WTR FILLER	1	
11	17920-75F00	.CAP, RADIATOR (1.1)	1	
12	17915-86P00	BRACKET, FILLER NECK	1	
13	17931-60R00	TANK, WTR RESERVE	1	
14	17932-76G00	CAP, WTR RESERVE TANK	1	
15	17933-60R00	RUBBER, WTR RSV TANK CAP	1	
16	09352-70111-600	HOSE (7X11X600)	1	L:600->185
17	17939-60R00	HOSE, RDTR TO RSV TANK	1	
18	09401-13431	CLIP (ID:13)	4	
19	09401-35001	CLIP	4	
20	09401-30001	CLIP	4	
21	01550-0612A	BOLT	4	
22	01550-0612A	BOLT	2	
23	02162-0612A	SCREW	2	
24	02162-0612A	SCREW	2	
25	17871-64R00	HOSE, HTR INLET	1	THERMOSTAT CASE TO HEATER
26-1	17872-64R00	HOSE, HTR OUTLET	1	5MT WATER INLET PIPE TO HEATER
26-2	17872-64R50	HOSE, HTR OUTLET	1	6AT WATER INLET PIPE TO HEATER
27	09401-21405	CLIP	3	
28-1	09401-18403	CLIP	1	5MT
28-2	09401-21405	CLIP	1	6AT
29	09280-28008	O RING (D:3.5,ID:27.7)	1	
30	13650-73H00	SENSOR, WTR TEMP	1	

FIG.188A

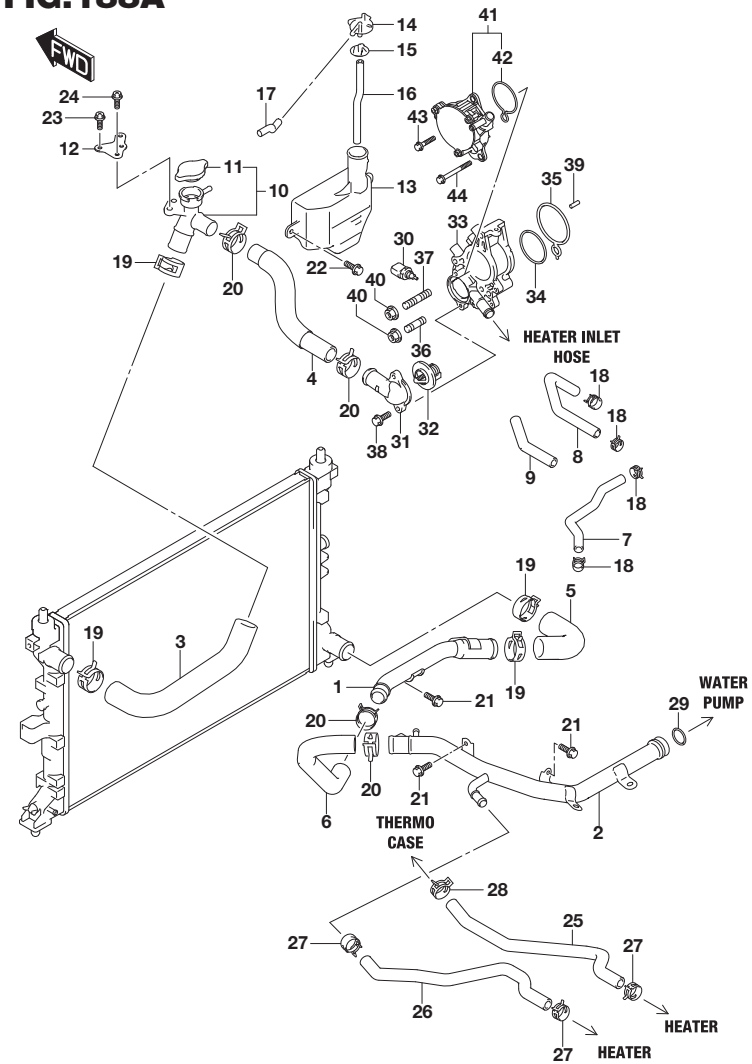

FIG.188A (1-H-4) WATER HOSE (K10C)

REF NO.	PART NO.	DESCRIPTION	Q'TY	REMARKS
31	17561-61MA0	CAP, WTR THERMO	1	
32	17670-65G00	THERMOSTAT, WTR (88C)	1	
33-1	17690-68M00	CASE, THERMO	1	5MT
33-2	17690-68M10	CASE, THERMO	1	6AT
34	17699-61P01	O RING, THERMO CASE	1	
35	17699-68M00	O RING, THERMO CASE	1	
36	01421-0825A	STUD BOLT	1	
37	01421-0840A	STUD BOLT	1	
38	01550-0625C	BOLT	2	
39	04221-06189	PIN	2	
40	08316-1008A	NUT	2	
41	18130-68M00	PUMP ASSY, VACUUM	1	
42	18135-68M00	.O RING	1	
43	01550-0825A	BOLT	1	
44	01550-0870A	BOLT	2	

FIG.188B

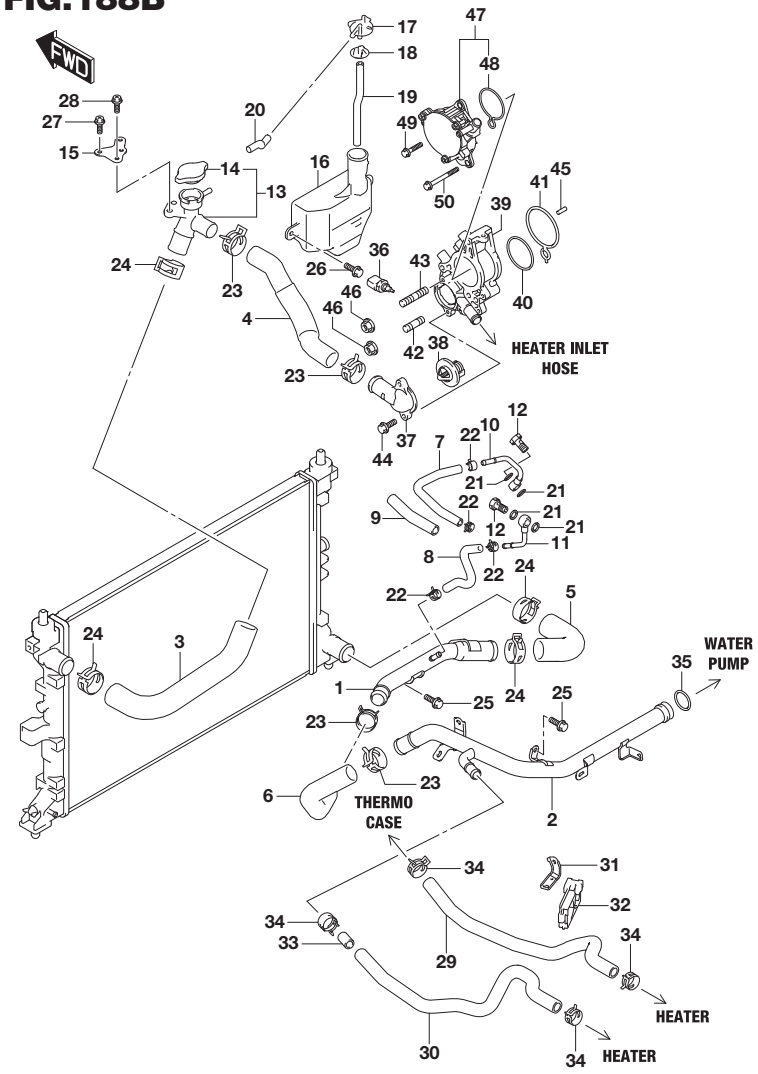

FIG.188B (1-H-5) WATER HOSE (K14C)

REF NO.	PART NO.	DESCRIPTION	Q'TY	REMARKS
1	17830-86P00	PIPE, WTR INLET NO.1	1	
2-1	17840-86P00	PIPE, WTR INLET	1	6MT
2-2	17840-86P10	PIPE, WTR INLET	1	6AT
3	17852-60R00	HOSE, RADIATOR INLET NO.1	1	
4	17853-60R00	HOSE, RADIATOR INLET NO.2	1	
5	17854-60R00	HOSE, RADIATOR OUTLET	1	
6	17855-60R00	HOSE, RADIATOR OUTLET NO.2	1	
7	17864-60R00	HOSE, HEAD TO TC	1	
8	17866-60R00	HOSE, TC TO INLET PIPE	1	
9	17867-86P00	PROTECTOR, TC INLET HOSE	1	
10	17880-86P00	PIPE, TC WTR INLET	1	
11	17890-86P00	PIPE, TC WTR OUTLET	1	
12	17891-86P00	BOLT, TC WTR PIPE	2	
13	17910-56P00	NECK ASSY, WTR FILLER	1	
14	17920-75F00	.CAP, RADIATOR (1.1)	1	
15	17915-86P00	BRACKET, FILLER NECK	1	
16	17931-60R00	TANK, WTR RESERVE	1	
17	17932-76G00	CAP, WTR RESERVE TANK	1	
18	17933-60R00	RUBBER, WTR RSV TANK CAP	1	
19	09352-70111-600	HOSE (7X11X600)	1	L:600->185
20	17939-60R00	HOSE, RDTR TO RSV TANK	1	
21	09168-12017	GASKET (12X17X1)	4	
22	09401-13431	CLIP (ID:13)	4	
23	09401-30405	CLIP (ID:30.5)	4	
24	09401-35403	CLIP	4	
25	01550-0612A	BOLT	4	
26	01550-0612A	BOLT	2	
27	02162-0612A	SCREW	2	
28	02162-0612A	SCREW	2	
29	17871-60R00	HOSE, HEATER INLET	1	
30	17872-60R00	HOSE, HEATER OUTLET	1	
31	17875-86P00	BRACKET, HEATER HOSE	1	
32	17876-72L00	CLAMP, HEATER HOSE	1	
33	17879-54LA0	SPACER, HTR HOSE	1	
34	09401-21405	CLIP	4	
35	09280-28008	O RING (D:3.5,ID:27.7)	1	

APK414-3 P22 188B
WATER HOSE (2)

FIG.188B

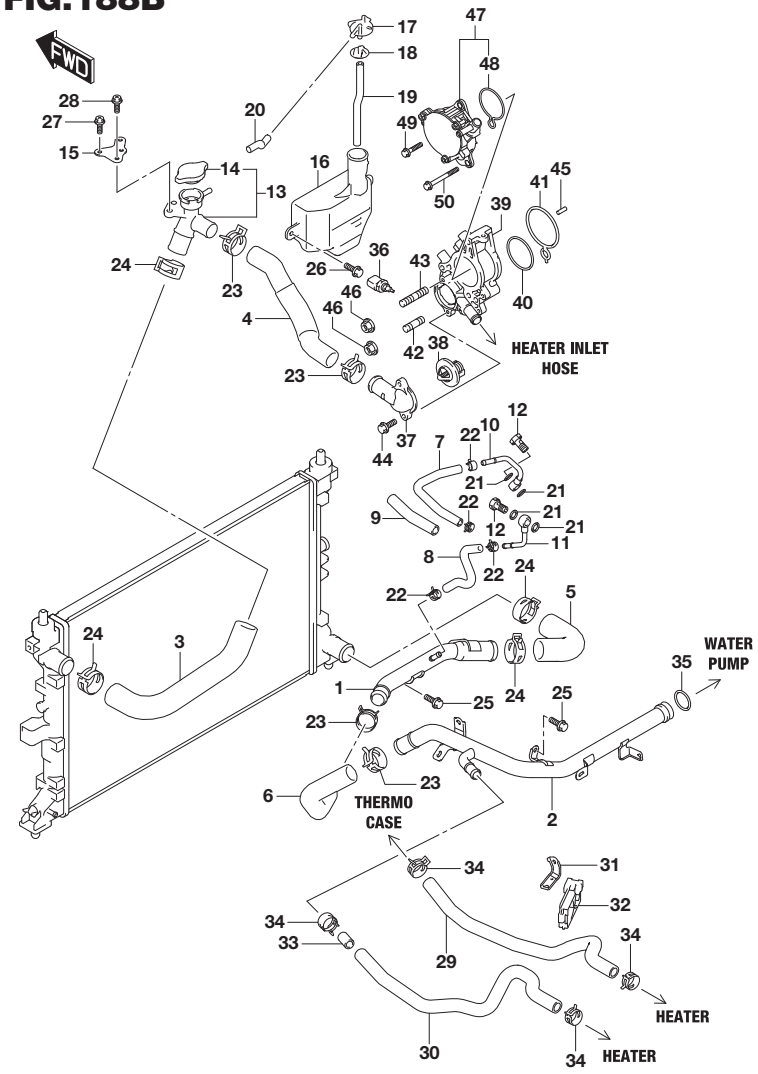

FIG.188B (1-H-6) WATER HOSE (K14C)

REF NO.	PART NO.	DESCRIPTION	Q'TY	REMARKS
36	13650-73H00	SENSOR, WTR TEMP	1	
37	17561-61MA0	CAP, WTR THERMO	1	
38	17670-65G00	THERMOSTAT, WTR (88C)	1	
39-1	17690-68M00	CASE, THERMO	1	6MT
39-2	17690-68M10	CASE, THERMO	1	6AT
40	17699-61P01	O RING, THERMO CASE	1	
41	17699-68M00	O RING, THERMO CASE	1	
42	01421-0825A	STUD BOLT	1	
43	01421-0840A	STUD BOLT	1	
44	01550-0625C	BOLT	2	
45	04221-06189	PIN	2	
46	08316-1008A	NUT	2	
47	18130-68M00	PUMP ASSY, VACUUM	1	
48	18135-68M00	.O RING	1	
49	01550-0825A	BOLT	1	
50	01550-0870A	BOLT	2	

FIG.188C

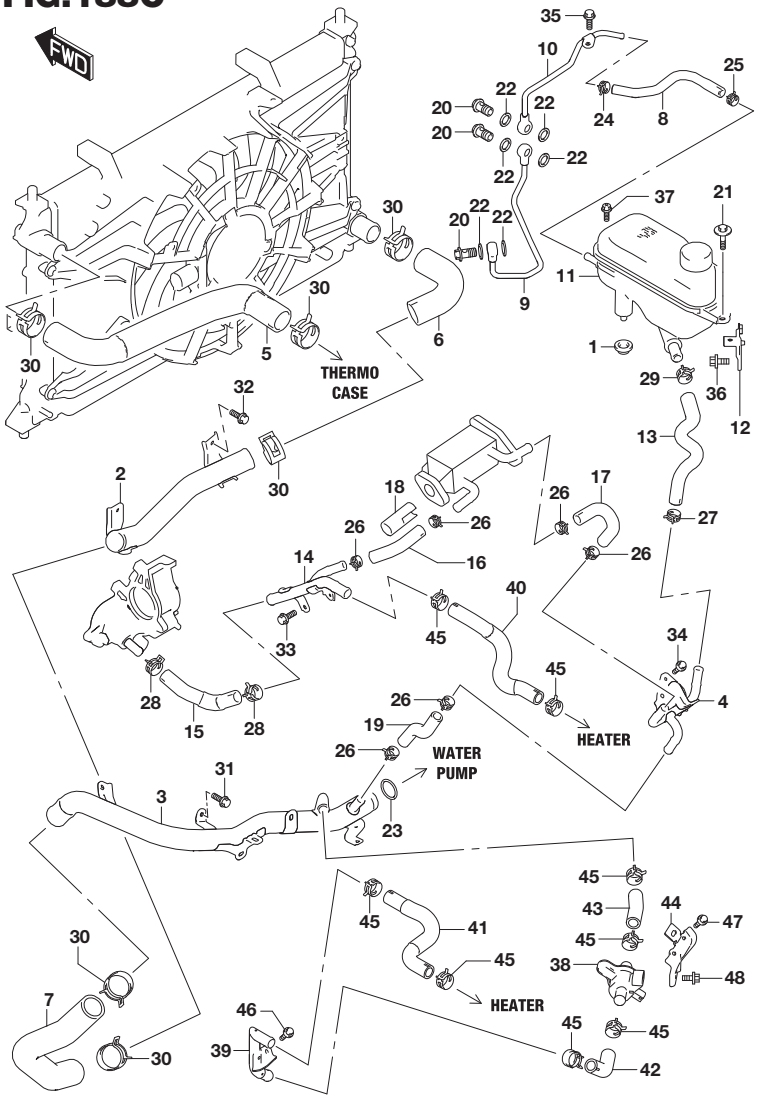

FIG.188C (1-H-7) WATER HOSE (K14D)

REF NO.	PART NO.	DESCRIPTION	Q'TY	REMARKS
1	13723-84MB0	GROMMET	1	
2	17830-74S00	PIPE, WTR INLET NO.1	1	
3	17840-74S00	PIPE, WTR INLET	1	WATER PUMP TO RADIATOR OUTLET HOSE
4	17850-74S00	PIPE, WTR 3 WAY	1	
5	17852-74S00	HOSE, RADIATOR INLET	1	RADIATOR TO THERMO CASE
6	17854-60R00	HOSE, RADIATOR OUTLET	1	
7	17855-74S00	HOSE, RADIATOR OUTLET NO.2	1	
8	17866-74S00	HOSE, TC TO DEG TANK	1	
9	17880-74S00	PIPE, TC WTR INLET	1	
10	17890-74S00	PIPE, TC WTR OUTLET	1	
11	17930-74S00	TANK ASSY, DEGASSING	1	
12	17932-56S00	BRACKET, DEG TANK	1	
13	17935-74S00	HOSE, DEG TANK OUTLET	1	
14	18720-74S00	PIPE, EGR COOLER WTR	1	
15	18721-74S00	HOSE, EGR COOLER WTR INLET NO.1	1	
16	18722-74S00	HOSE, EGR COOLER WTR INLET NO.2	1	
17	18723-74S00	HOSE, EGR COOLER WTR OUTLET	1	
18	18724-74S00	PROTECTOR, EGR COOLER HOSE	1	
19	18725-74S00	HOSE, EGR CLR WTR OUTLET NO.2	1	
20	22935-79J10	BOLT, OIL PIPE UNION	3	
21	09116-06150	BOLT (6X25)	1	
22	09168-14019	GASKET (14X20X1.5)	6	
23	09280-28008	O RING (D:3.5,ID:27.7)	1	
24	09401-13431	CLIP (ID:13)	1	
25	09401-14405	CLIP	1	
26	09401-18418	CLIP	6	
27	09401-18418	CLIP	1	
28	09401-21415	CLIP	2	
29	09401-21415	CLIP	1	
30	09401-35001	CLIP	6	
31	01550-0612A	BOLT	2	
32	01550-0612C	BOLT	2	
33	01550-0612C	BOLT	2	

FIG.188C

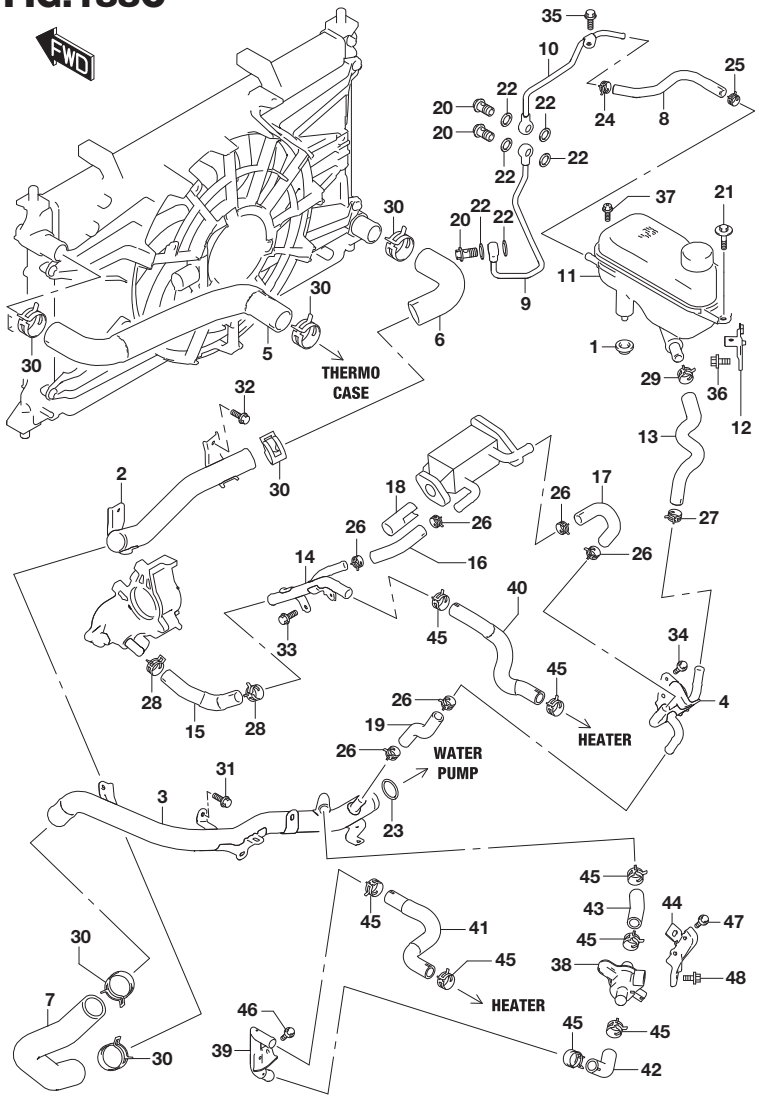

FIG.188C (1-H-8) WATER HOSE (K14D)

REF NO.	PART NO.	DESCRIPTION	Q'TY	REMARKS
34	01550-0612C	BOLT	2	
35	01551-0612C	BOLT	1	
36	02162-0610A	SCREW	1	
37	02162-0612A	SCREW	1	
38	17660-74S00	VALVE, HTR	1	
39	17870-74S00	PIPE, HTR OUTLET	1	
40	17871-74S00	HOSE, HEATER INLET	1	EGR COOLER WTR PIPE TO HEATER
41	17872-74S00	HOSE, HEATER OUTLET NO.1	1	HTR OUTLET PIPE TO HEATER
42	17873-74S00	HOSE, HEATER OUTLET NO.2	1	
43	17874-74S00	HOSE, HTR OUTLET NO.3	1	
44	17875-74S00	BRACKET, HTR VALVE	1	
45	09401-21415	CLIP	8	
46	01550-0612C	BOLT	1	
47	01550-0612C	BOLT	2	
48	01550-0612C	BOLT	2	

FIG.18PA

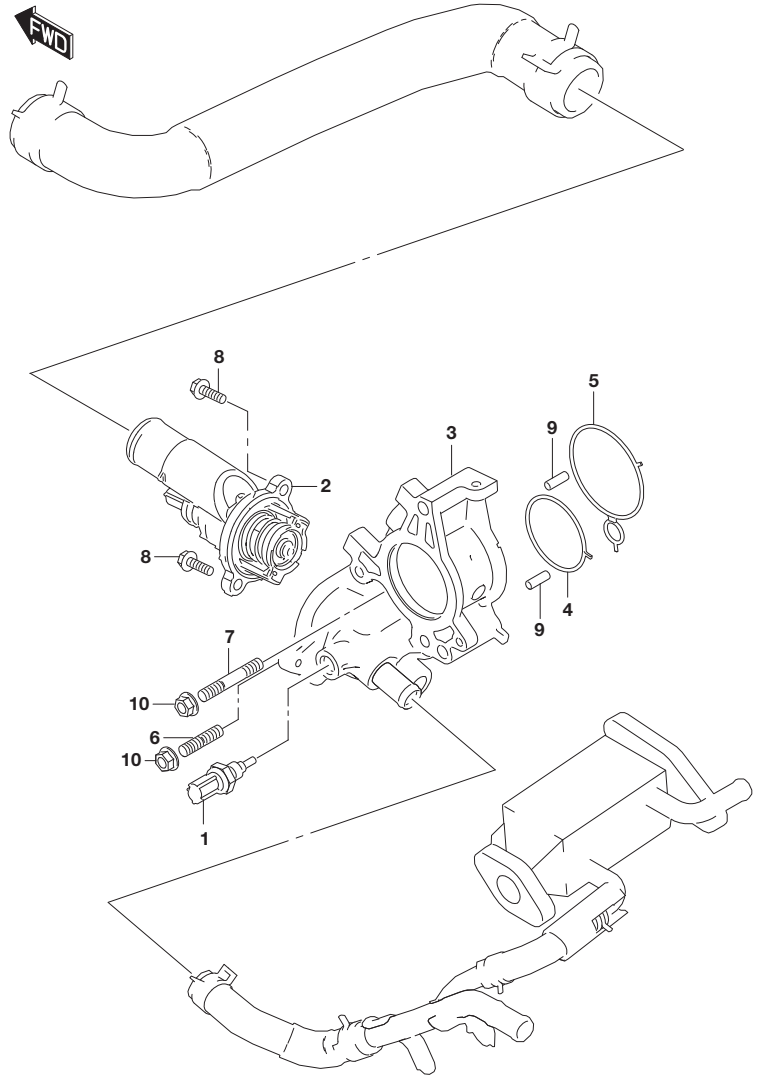

FIG.18PA (1-H-9) THERMOSTAT (K14D)

REF NO.	PART NO.	DESCRIPTION	Q'TY	REMARKS
1	13650-73H00	SENSOR, WTR TEMP	1	
2	17670-53S00	THERMOSTAT, WTR	1	
3	17690-53S00	CASE, THERMO	1	
4	17699-61P01	O RING, THERMO CASE	1	
5	17699-68M00	O RING, THERMO CASE	1	
6	01421-0820A	STUD BOLT	1	
7	01421-0840A	STUD BOLT	1	
8	01550-0620A	BOLT	2	
9	04221-06189	PIN	2	
10	08316-1008A	NUT	2	

APK414-3 P22 18PA
THERMOSTAT

FIG.190A

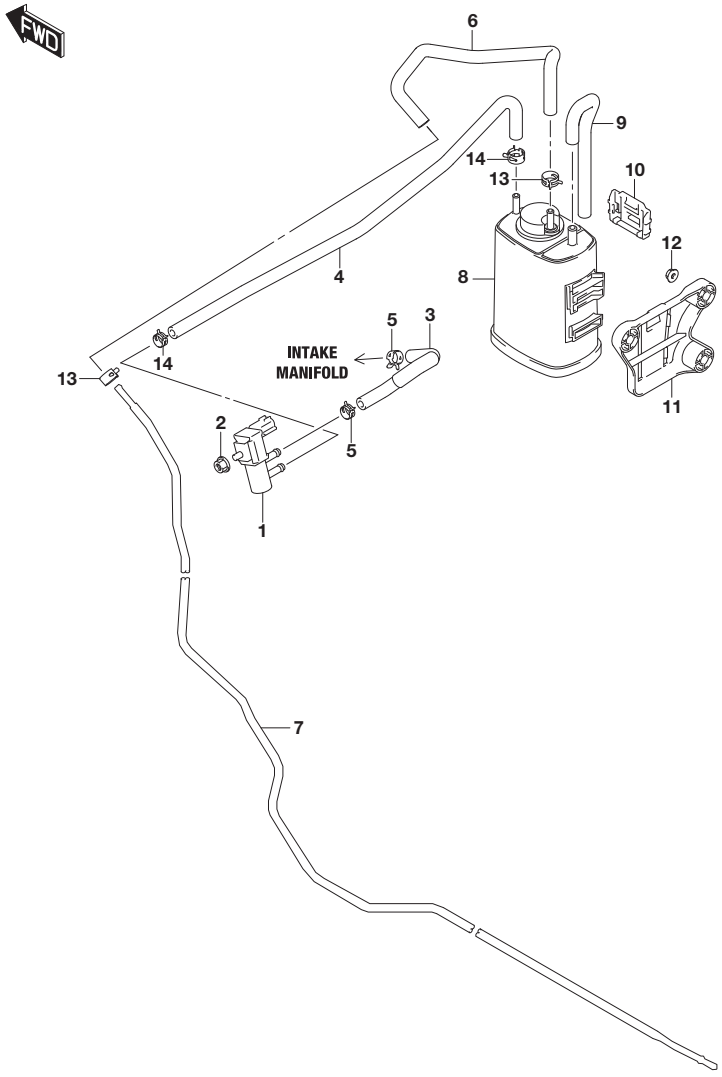

FIG.190A (1-H-10) EMISSION CONTROL (K10C:LHD)

REF NO.	PART NO.	DESCRIPTION	Q'TY	REMARKS
1	18114-68M00	VALVE, CANISTER PURGE	1	
2	08316-1006A	NUT	1	
3	18564-64R00	HOSE, PURGE	1	VSV TO INTAKE MANIFOLD
4	18562-64R00	HOSE, PURGE	1	
5	09401-11419	CLIP (ID:11.1)	2	
6	18561-61M00	HOSE, EVAP	1	
7	18351-54P00	PIPE, EVAP	1	
8	18560-83J00	CANISTER	1	
9	18567-61M00	HOSE, CANISTER SUCTION	1	
10	18581-72L00	CLAMP, CANISTER SUCTION	1	
11	18570-61M00	BRACKET, CANISTER	1	
12	09159-06076	NUT	3	
13	09401-11419	CLIP (ID:11.1)	2	
14	09401-11419	CLIP (ID:11.1)	2	

FIG.190B(1-H-11) EMISSION CONTROL (K10C:RHD)
FIG.190C(1-H-12) EMISSION CONTROL (K14C:LHD:TYPE 3)
FIG.190D(1-H-13) EMISSION CONTROL (K14C:LHD:TYPE 4)
FIG.190E(1-H-14) EMISSION CONTROL (K14C:RHD:TYPE 3)
FIG.190F(1-I-2) EMISSION CONTROL (K14C:RHD:TYPE 4)
FIG.190G(1-I-3) EMISSION CONTROL (K14D)

FIG.190B

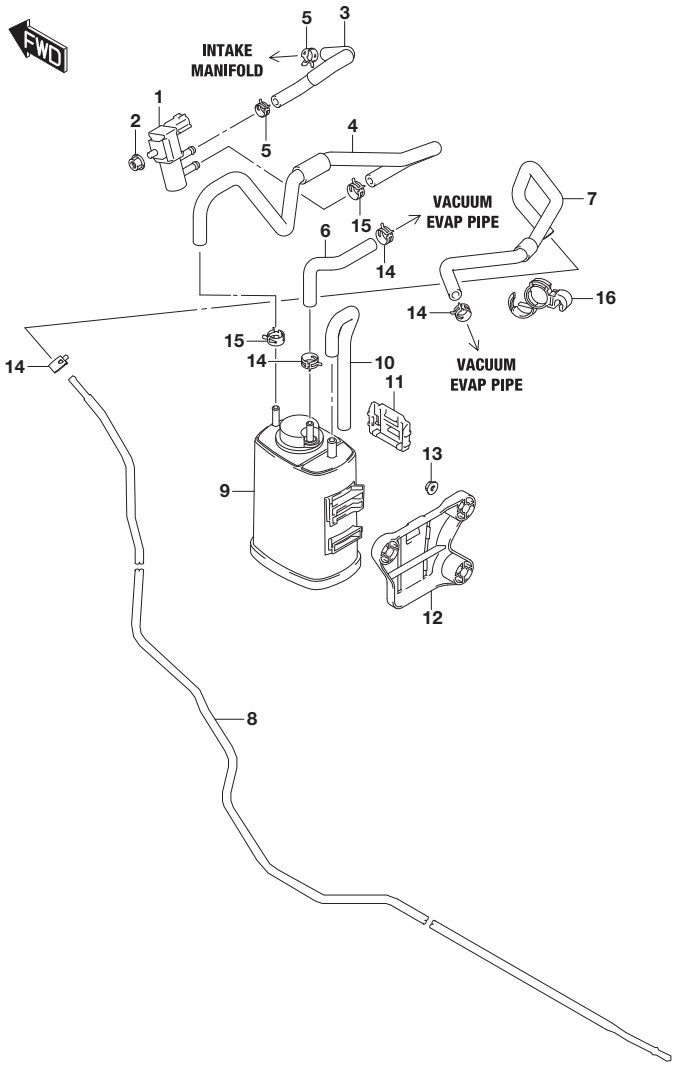

FIG.190B (1-H-11) EMISSION CONTROL (K10C:RHD)

REF NO.	PART NO.	DESCRIPTION	Q'TY	REMARKS
1	18114-68M00	VALVE, CANISTER PURGE	1	
2	08316-1006A	NUT	1	
3	18564-64R00	HOSE, PURGE	1	
4	18562-64R10	HOSE, PURGE	1	
5	09401-11419	CLIP (ID:11.1)	2	
6	18563-61M10	HOSE, PURGE CSTR TO PIPE	1	
7	18561-61M10	HOSE, EVAP NO.1	1	
8	18351-54P00	PIPE, EVAP	1	
9	18560-83J00	CANISTER	1	
10	18567-61M00	HOSE, CANISTER SUCTION	1	
11	18581-72L00	CLAMP, CANISTER SUCTION	1	
12	18570-61M00	BRACKET, CANISTER	1	
13	09159-06076	NUT	3	
14	09401-11419	CLIP (ID:11.1)	4	
15	09401-11419	CLIP (ID:11.1)	2	
16	09408-00306	CLAMP	1	

FIG.190C

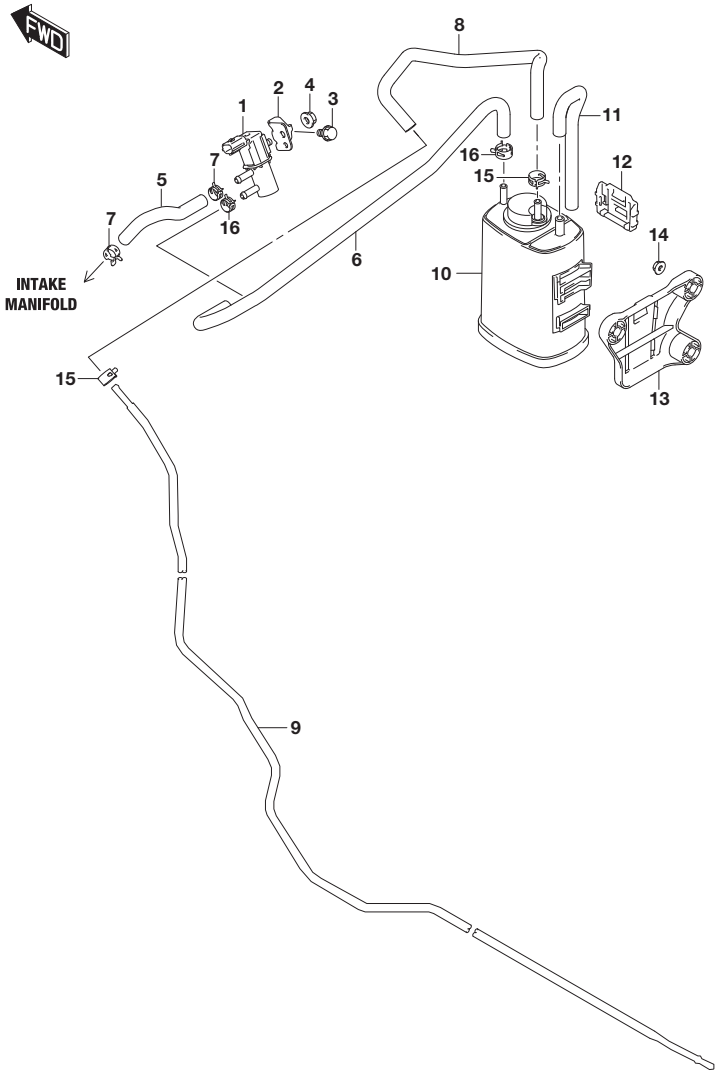

FIG.190C (1-H-12) EMISSION CONTROL (K14C:LHD:TYPE 3)

REF NO.	PART NO.	DESCRIPTION	Q'TY	REMARKS
1	18114-68M00	VALVE, CANISTER PURGE	1	
2	18417-68M00	BRACKET, VSV	1	
3	01550-0612A	BOLT	1	
4	08316-1006A	NUT	1	
5	18564-60R00	HOSE, PURGE	1	
6	18562-60R00	HOSE, PURGE	1	
7	09401-11419	CLIP (ID:11.1)	2	
8	18561-61M00	HOSE, EVAP	1	
9	18351-54P00	PIPE, EVAP	1	
10	18560-83J00	CANISTER	1	
11	18567-61M00	HOSE, CANISTER SUCTION	1	
12	18581-72L00	CLAMP, CANISTER SUCTION	1	
13	18570-61M00	BRACKET, CANISTER	1	
14	09159-06076	NUT	3	
15	09401-11419	CLIP (ID:11.1)	2	
16	09401-11419	CLIP (ID:11.1)	2	

FIG.190D

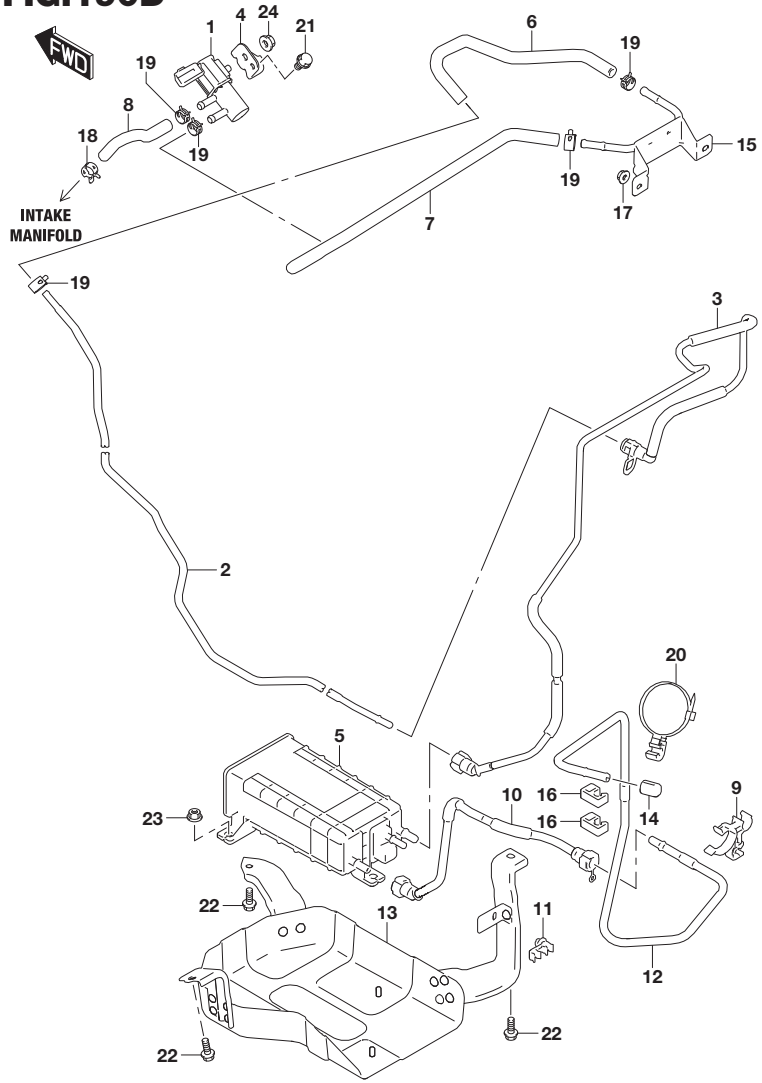

FIG.190D (1-H-13) EMISSION CONTROL (K14C:LHD:TYPE 4)

REF NO.	PART NO.	DESCRIPTION	Q'TY	REMARKS
1	18117-78K00	VALVE, EVAP CSTR PURGE	1	
2	18351-74S00	PIPE, PURGE	1	
3	18352-74S00	PIPE, PURGE	1	
4	18417-68M00	BRACKET, VSV	1	
5	18560-74S00	CANISTER	1	
6	18561-60R30	HOSE, PURGE	1	
7	18562-60R30	HOSE, PURGE	1	
8	18564-60R30	HOSE, PURGE	1	
9	18565-74S00	CLAMP, AIR SUCTION PIPE	1	
10	18567-74S00	PIPE, CANISTER SUCTION	1	
11	18568-74S00	CLAMP, PURGE PIPE	1	
12	18569-74S00	PIPE, AIR SUCTION	1	
13	18570-74S00	BRACKET, CANISTER	1	
14	18571-74S00	FILTER, AIR SUCTION	1	
15	18580-60R00	PIPE, PURGE	1	
16	51082-52S00	CLAMP, VACUUM PIPE	2	
17	09159-06076	NUT	2	
18	09401-11419	CLIP (ID:11.1)	1	
19	09401-12405	CLIP (ID:12.5)	5	
20	09408-00345	CLAMP	1	
21	01550-0612A	BOLT	1	
22	01551-0816C	BOLT	3	
23	08313-2006A	NUT	3	
24	08316-1006A	NUT	1	

FIG.190E

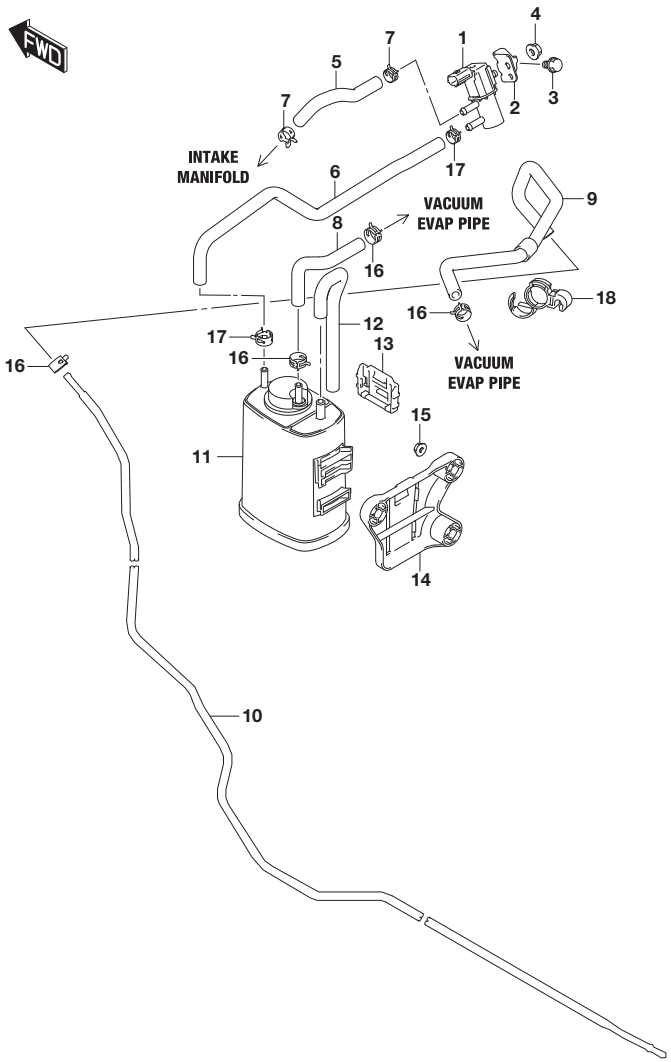

FIG.190E (1-H-14) EMISSION CONTROL (K14C:RHD:TYPE 3)

REF NO.	PART NO.	DESCRIPTION	Q'TY	REMARKS
1	18114-68M00	VALVE, CANISTER PURGE	1	
2	18417-68M00	BRACKET, VSV	1	
3	01550-0612A	BOLT	1	
4	08316-1006A	NUT	1	
5	18564-60R00	HOSE, PURGE	1	
6	18562-60R10	HOSE, PURGE	1	
7	09401-11419	CLIP (ID:11.1)	2	
8	18563-61M10	HOSE, PURGE CSTR TO PIPE	1	
9	18561-61M10	HOSE, EVAP NO.1	1	
10	18351-54P00	PIPE, EVAP	1	
11	18560-83J00	CANISTER	1	
12	18567-61M00	HOSE, CANISTER SUCTION	1	
13	18581-72L00	CLAMP, CANISTER SUCTION	1	
14	18570-61M00	BRACKET, CANISTER	1	
15	09159-06076	NUT	3	
16	09401-11419	CLIP (ID:11.1)	4	
17	09401-11419	CLIP (ID:11.1)	2	
18	09408-00306	CLAMP	1	

FIG.190F

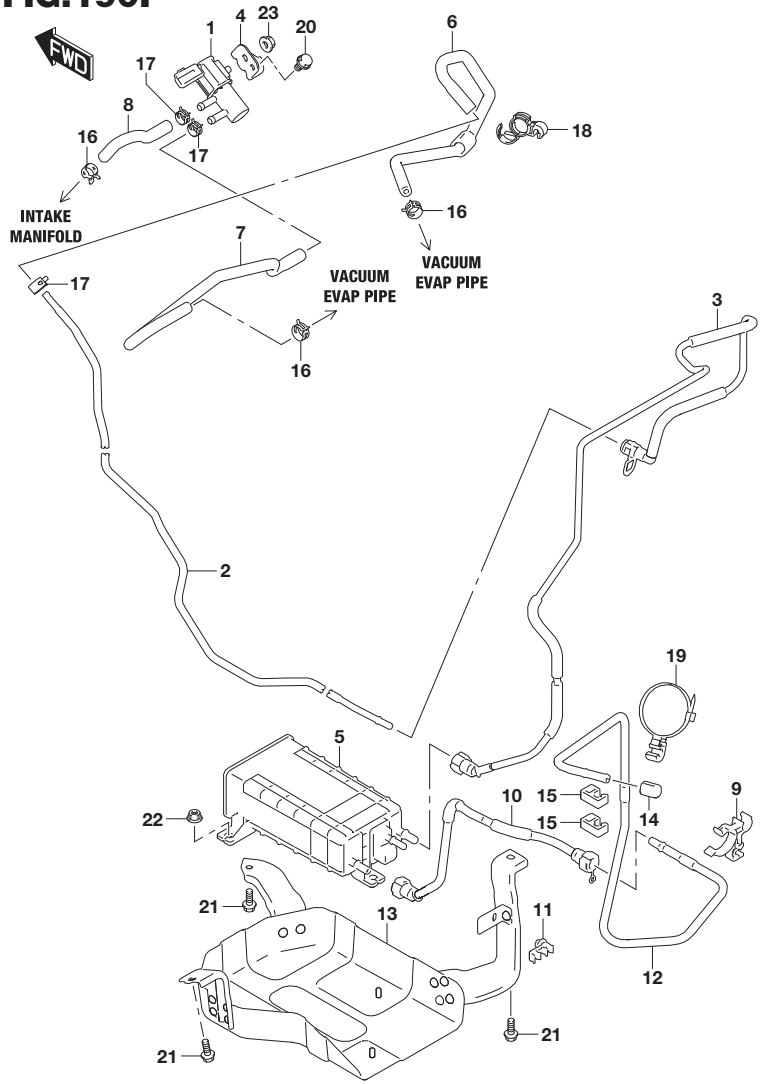

FIG.190F (1-I-2) EMISSION CONTROL (K14C:RHD:TYPE 4)

REF NO.	PART NO.	DESCRIPTION	Q'TY	REMARKS
1	18117-78K00	VALVE, EVAP CSTR PURGE	1	
2	18351-74S00	PIPE, PURGE	1	
3	18352-74S00	PIPE, PURGE	1	
4	18417-68M00	BRACKET, VSV	1	
5	18560-74S00	CANISTER	1	
6	18561-60R40	HOSE, PURGE	1	
7	18562-60R40	HOSE, PURGE	1	
8	18564-60R30	HOSE, PURGE	1	
9	18565-74S00	CLAMP, AIR SUCTION PIPE	1	
10	18567-74S00	PIPE, CANISTER SUCTION	1	
11	18568-74S00	CLAMP, PURGE PIPE	1	
12	18569-74S00	PIPE, AIR SUCTION	1	
13	18570-74S00	BRACKET, CANISTER	1	
14	18571-74S00	FILTER, AIR SUCTION	1	
15	51082-52S00	CLAMP, VACUUM PIPE	2	
16	09401-11419	CLIP (ID:11.1)	3	
17	09401-12405	CLIP (ID:12.5)	3	
18	09408-00306	CLAMP	1	
19	09408-00345	CLAMP	1	
20	01550-0612A	BOLT	1	
21	01551-0816C	BOLT	3	
22	08313-2006A	NUT	3	
23	08316-1006A	NUT	1	

FIG.190G

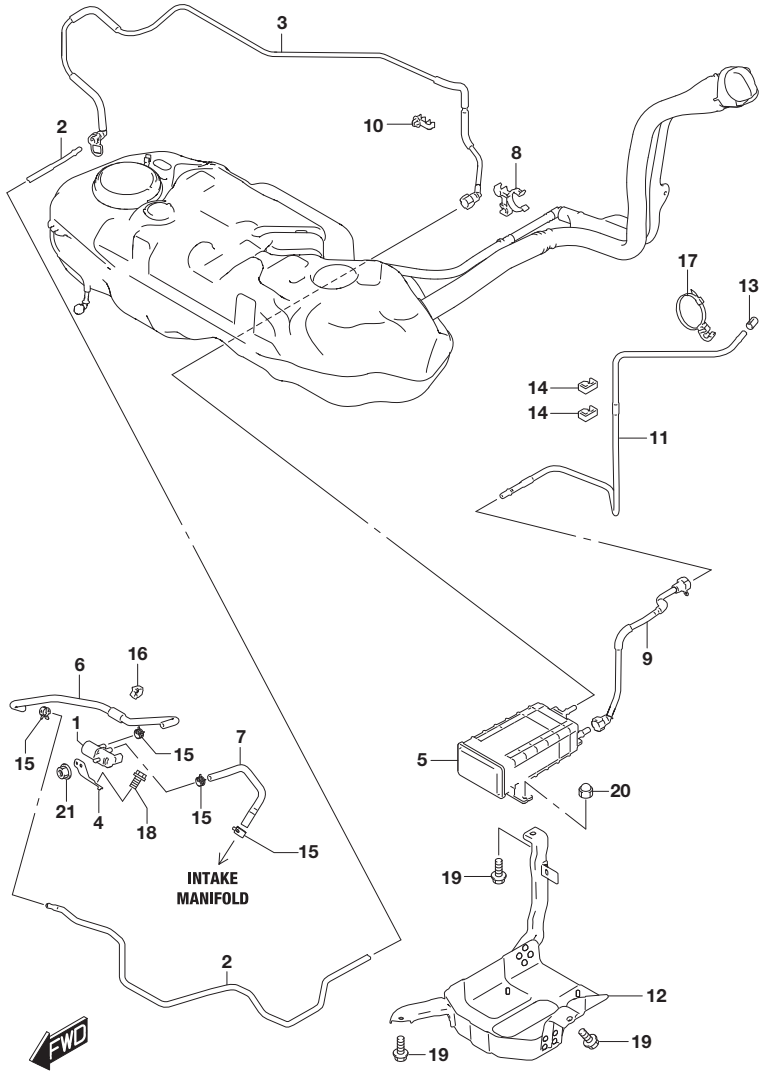

FIG.190G (1-I-3) EMISSION CONTROL (K14D)

REF NO.	PART NO.	DESCRIPTION	Q'TY	REMARKS
1	18117-78K00	VALVE, EVAP CSTR PURGE	1	
2	18351-74S00	PIPE, PURGE	1	
3	18352-74S00	PIPE, PURGE	1	
4	18417-74S00	BRACKET, VSV	1	
5	18560-74S00	CANISTER	1	
6	18561-74S00	HOSE, PURGE	1	
7	18564-74S00	HOSE, PURGE	1	EVAP CSTR PURGE VALVE TO INTAKE MANIFOLD
8	18565-74S00	CLAMP, AIR SUCTION PIPE	1	
9	18567-74S00	PIPE, CANISTER SUCTION	1	
10	18568-74S00	CLAMP, PURGE PIPE	1	
11	18569-74S00	PIPE, AIR SUCTION	1	
12	18570-74S00	BRACKET, CANISTER	1	
13	18571-74S00	FILTER, AIR SUCTION	1	
14	51082-52S00	CLAMP, VACUUM PIPE	2	
15	09401-12405	CLIP (ID:12.5)	4	
16	09403-17306	CLAMP	1	
17	09408-00345	CLAMP	1	
18	01550-0612A	BOLT	1	
19	01551-0816A	BOLT	3	
20	08313-2006A	NUT	3	
21	08316-1006A	NUT	1	

FIG.192A

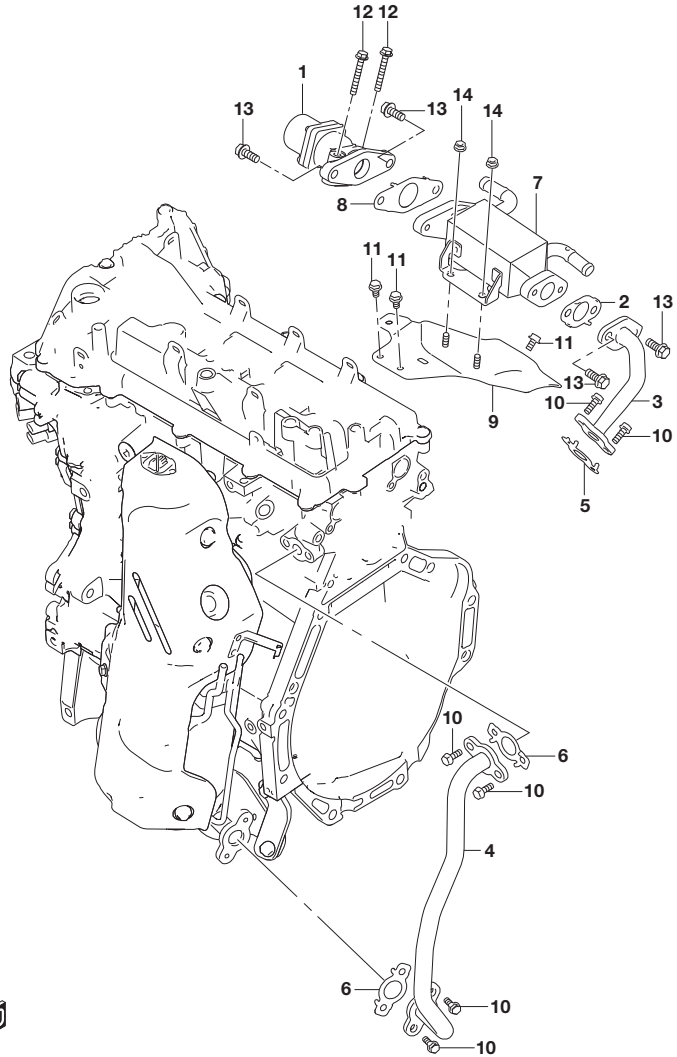

FIG.192A (1-I-4) EGR VALVE (K14D)

REF NO.	PART NO.	DESCRIPTION	Q'TY	REMARKS
1	18111-53SA0	VALVE, EGR	1	
2	18529-53SA0	GASKET, EGR COOLER	1	
3	18530-53SA0	PIPE, EGR	1	
4	18530-53SB0	PIPE, EGR EXH SIDE	1	
5	18533-53SA0	GASKET, EGR PIPE	1	
6	18533-68P00	GASKET, EGR PIPE	2	
7	18710-53SA0	COOLER, EGR	1	
8	18715-53SA0	GASKET, EGR VALVE	1	
9	18720-53SA0	BRACKET, EGR	1	
10	09103-06267	BOLT (6X18)	6	
11	01550-0612C	BOLT	3	
12	01550-0645C	BOLT	2	
13	01550-0820C	BOLT	4	
14	08316-1006C	NUT	2	

APK414-3 P22 192A
EGR VALVE

FIG.194A

FIG.194A (1-I-5) VACUUM PUMP (K14D)

REF NO.	PART NO.	DESCRIPTION	Q'TY	REMARKS
1	18130-53SA0	PUMP ASSY, VACUUM	1	
2	18135-53SA0	.GASKET, VACUUM PUMP	1	
3	01550-0825A	BOLT	1	
4	01550-0870A	BOLT	2	

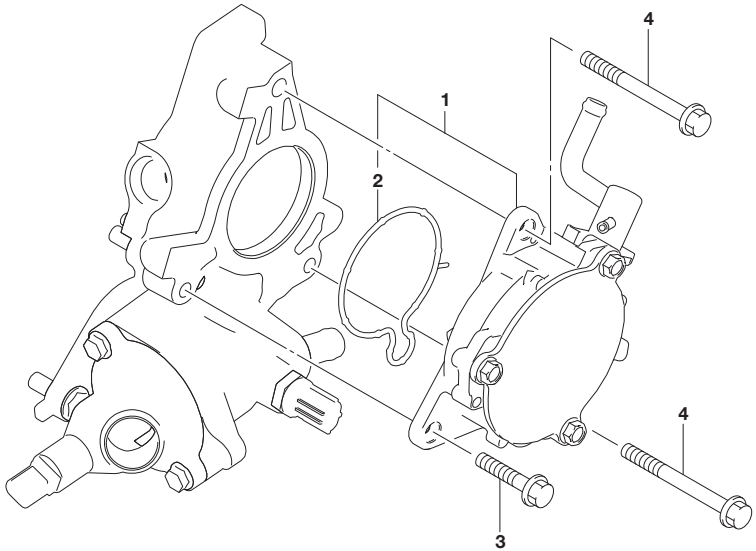

APK414-3 P22 194A
VACUUM PUMP

FIG.199A

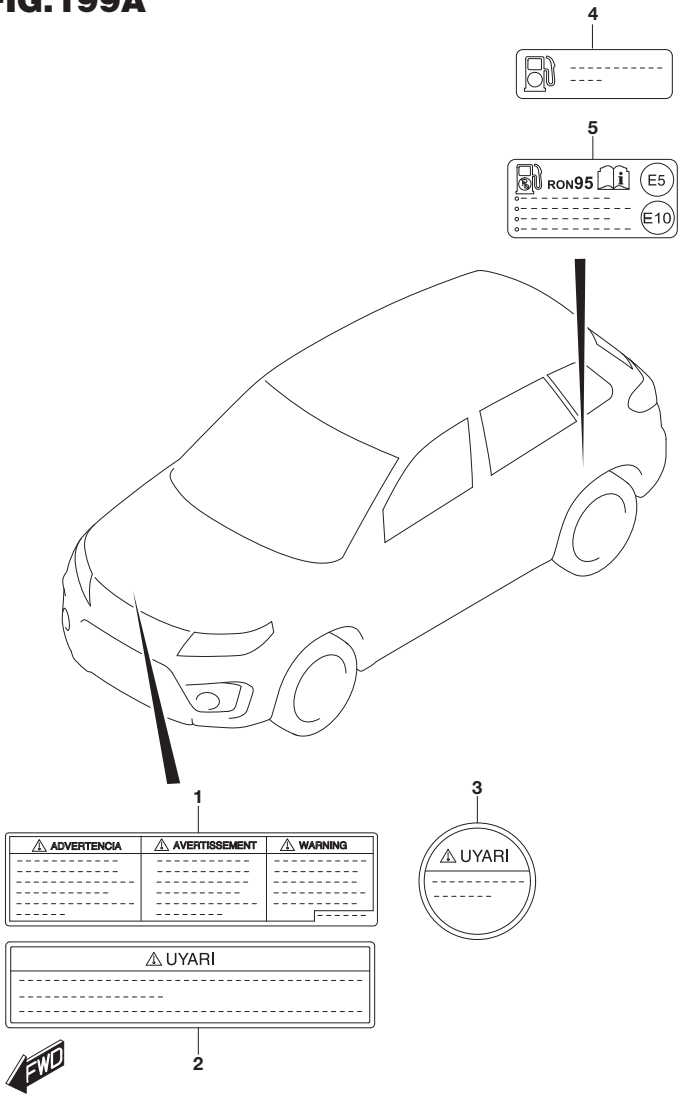

FIG.199A (1-I-6) LABEL

REF NO.	PART NO.	DESCRIPTION	Q'TY	REMARKS
1	11958-65G11	LABEL, COOLING FAN	1	ENGLISH,FRENCH,SPANISH
2	11958-61M00	LABEL, COOLING FAN	1	TURKISH
3	11966-61M00	LABEL, PRESSURE CAP	1	TURKISH
4	11959-61M00	LABEL, FUEL LIMITATION	1	TURKISH
5	11959-77R01	LABEL, FUEL LIMITATION	1	ENGLISH,GERMAN,SPANISH,SWEDISH

APK414-3 P22 199A
LABEL

FIG.200A

FIG.200A (1-I-7) MT TRANSMISSION ASSY (5MT)

REF NO.	PART NO.	DESCRIPTION	Q'TY	REMARKS
1-1	20008-61MA1	T/M ASSY, MANUAL	1	2WD
1-2	20008-61MG0	T/M ASSY, MANUAL	1	4WD

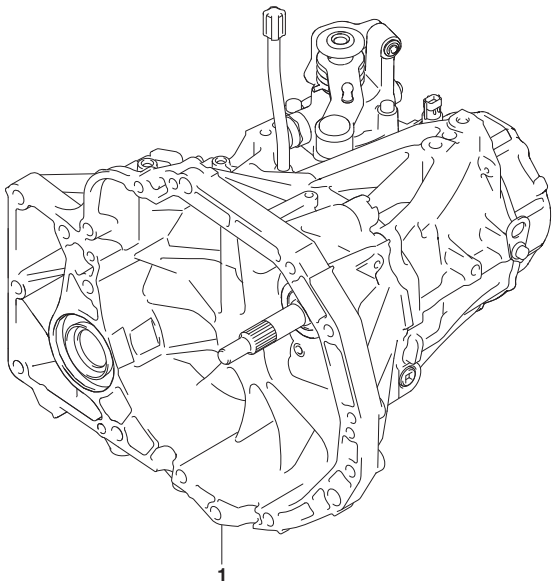

FIG.200B

FIG.200B (1-I-8) MT TRANSMISSION ASSY (6MT:K14C)

REF NO.	PART NO.	DESCRIPTION	Q'TY	REMARKS
1-1	20008-68M01	T/M ASSY, MANUAL	1	2WD
1-2	20008-68M60	T/M ASSY, MANUAL	1	4WD

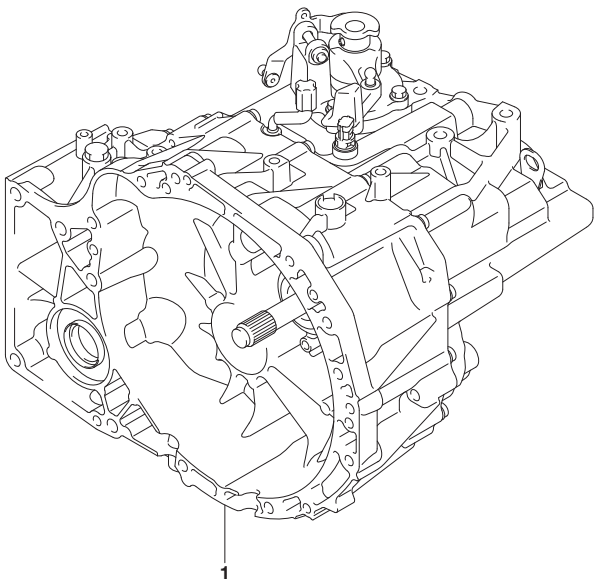

FIG.202A

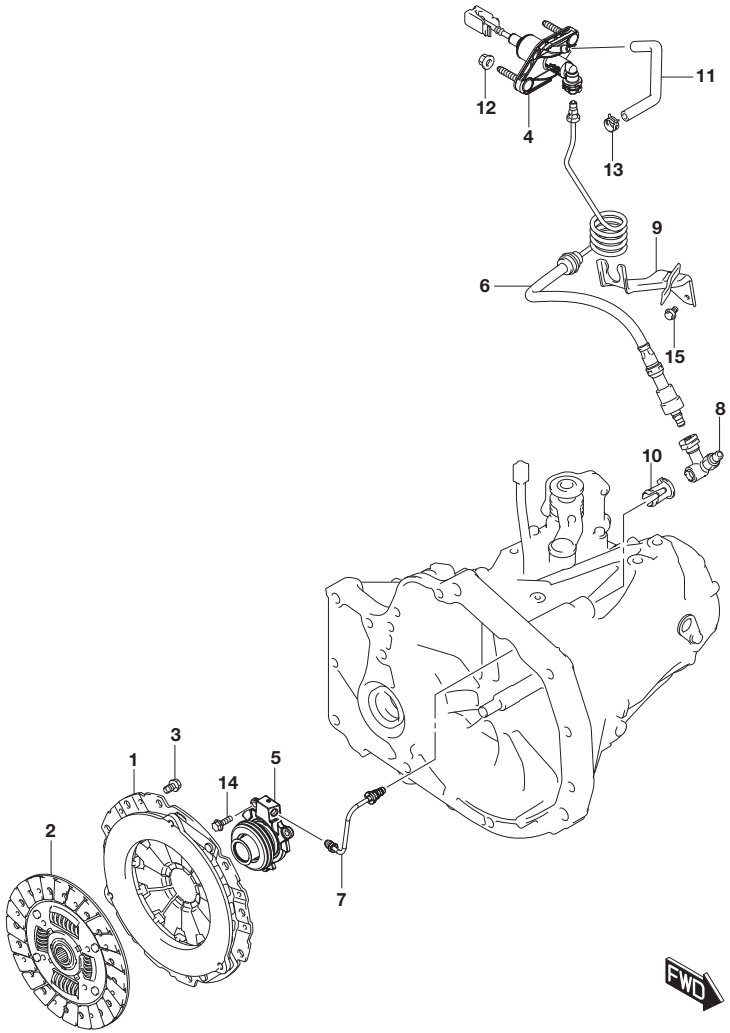

FIG.202A (1-I-9) MT CLUTCH (5MT:LHD)

REF NO.	PART NO.	DESCRIPTION	Q'TY	REMARKS
1	22100-64R00	COVER ASSY, CLUTCH	1	
2	22400-64R00	DISC, CLUTCH	1	
3	09117-08096	BOLT (8X16)	6	
4	23810-61M00	CYLINDER, CLUTCH MASTER	1	
5	23820-79J00	CYLINDER ASSY, CLUTCH OPERATING	1	
6	23830-64R00	PIPE ASSY, CLUTCH OIL LH	1	
7	23840-86J00	PIPE, CLUTCH OIL HOUSING	1	
8	23856-79J00	JOINT, CLUTCH OIL	1	
9	23870-61M00	BRACKET, CLUTCH OIL HOSE	1	
10	23874-64J00	SLEEVE, CLUTCH PIPE JOINT	1	
11	23881-61M00	HOSE, CLUTCH RESERVOIR LH	1	
12	09159-08127	NUT	2	
13	09401-12405	CLIP (ID:12.5)	1	
14	01550-0620A	BOLT	3	
15	02162-0612A	SCREW	2	

FIG.202B(1-I-10) MT CLUTCH (5MT:RHD)
FIG.202C(1-I-11) MT CLUTCH (6MT:LHD)
FIG.202D(1-I-12) MT CLUTCH (6MT:RHD)

FIG.202B

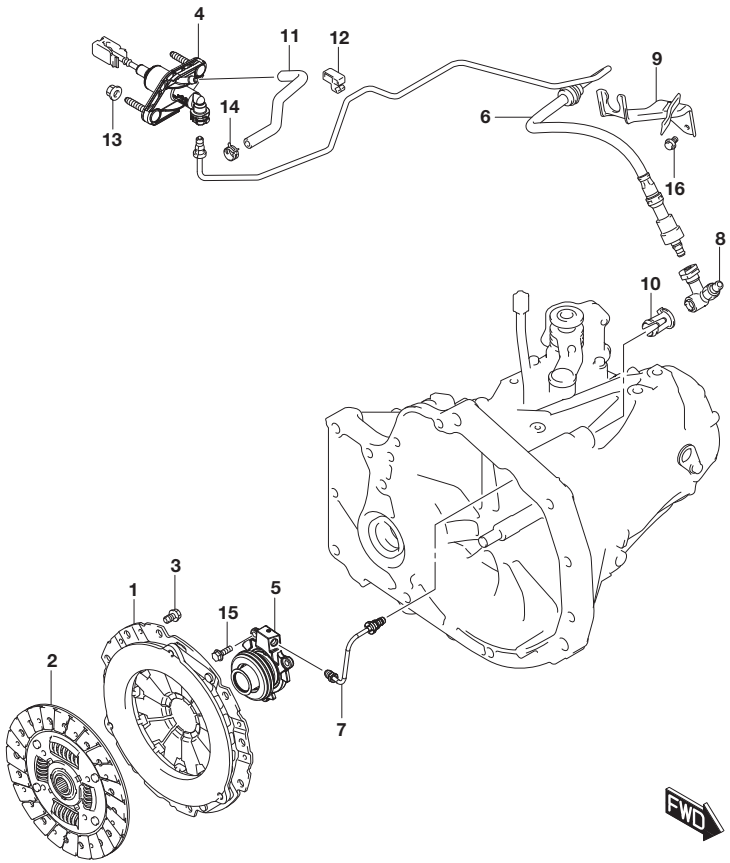

FIG.202B (1-I-10) MT CLUTCH (5MT:RHD)

REF NO.	PART NO.	DESCRIPTION	Q'TY	REMARKS
1	22100-64R00	COVER ASSY, CLUTCH	1	
2	22400-64R00	DISC, CLUTCH	1	
3	09117-08096	BOLT (8X16)	6	
4	23810-61M00	CYLINDER, CLUTCH MASTER	1	
5	23820-79J00	CYLINDER ASSY, CLUTCH OPERATING	1	
6	23830-61M20	PIPE ASSY, CLUTCH OIL RH	1	
7	23840-86J00	PIPE, CLUTCH OIL HOUSING	1	
8	23856-79J00	JOINT, CLUTCH OIL	1	
9	23870-61M00	BRACKET, CLUTCH OIL HOSE	1	
10	23874-64J00	SLEEVE, CLUTCH PIPE JOINT	1	
11	23881-61M20	HOSE, CLUTCH RESERVOIR RH	1	
12	27978-71L00	CLAMP, CLUTCH OIL PIPE	1	
13	09159-08127	NUT	2	
14	09401-12405	CLIP (ID:12.5)	1	
15	01550-0620A	BOLT	3	
16	02162-0612A	SCREW	2	

FIG.202C

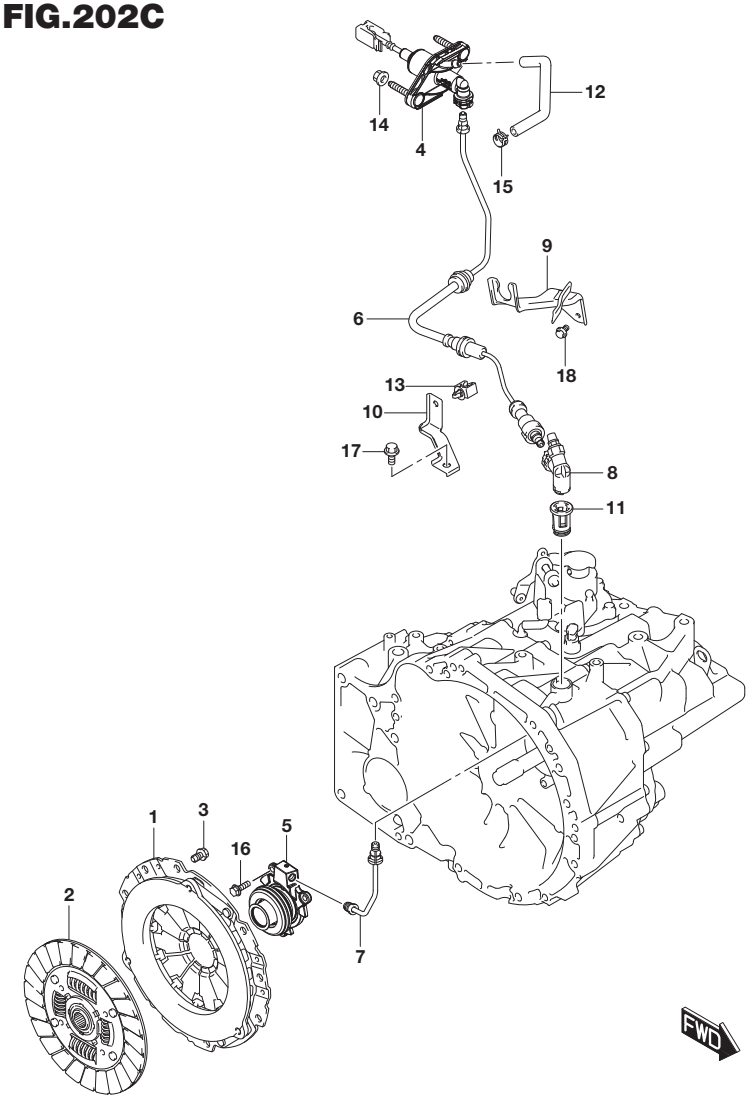

FIG.202C (1-I-11) MT CLUTCH (6MT:LHD)

REF NO.	PART NO.	DESCRIPTION	Q'TY	REMARKS
1-1	22100-60R00	COVER ASSY, CLUTCH	1	K14C
1-2	22100-60R40	COVER ASSY, CLUTCH	1	K14D
2-1	22400-60R00	DISC, CLUTCH	1	K14C
2-2	22400-60R40	DISC, CLUTCH	1	K14D
3	09117-08096	BOLT (8X16)	6	
4	23810-61M00	CYLINDER, CLUTCH MASTER	1	
5	23820-79J00	CYLINDER ASSY, CLUTCH OPERATING	1	
6	23830-60R00	PIPE ASSY, CLUTCH OIL LH	1	
7	23840-54L00	PIPE, CLUTCH OIL HOUSING	1	
8	23856-64JA0	JOINT ASSY, CLUTCH PIPE	1	
9	23870-61M00	BRACKET, CLUTCH OIL HOSE	1	
10	23871-54L01	BRACKET, CLUTCH OIL PIPE	1	
11	23874-64J00	SLEEVE, CLUTCH PIPE JOINT	1	
12	23881-61M00	HOSE, CLUTCH RESERVOIR LH	1	
13	51761-79J00	CLAMP, BK PIPE SIDE MEMBER	1	
14	09159-08127	NUT	2	
15	09401-12405	CLIP (ID:12.5)	1	
16	01550-0620A	BOLT	3	
17	01550-0812A	BOLT	1	
18	02162-0612A	SCREW	2	

FIG.202D

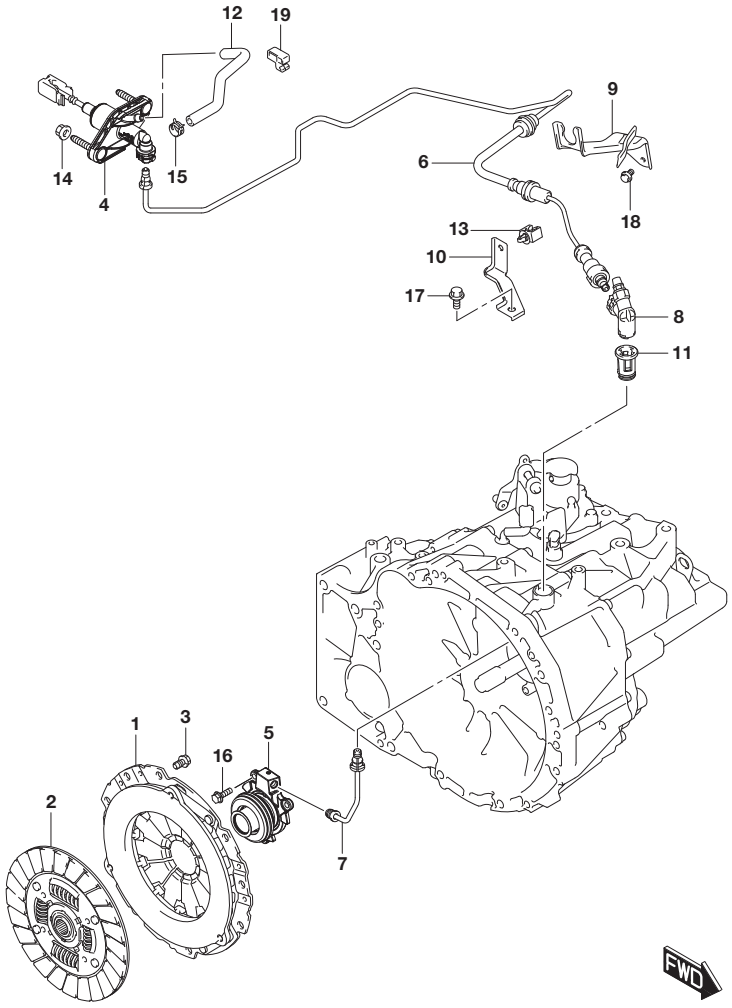

FIG.202D (1-I-12) MT CLUTCH (6MT:RHD)

REF NO.	PART NO.	DESCRIPTION	Q'TY	REMARKS
1-1	22100-60R00	COVER ASSY, CLUTCH	1	K14C
1-2	22100-60R40	COVER ASSY, CLUTCH	1	K14D
2-1	22400-60R00	DISC, CLUTCH	1	K14C
2-2	22400-60R40	DISC, CLUTCH	1	K14D
3	09117-08096	BOLT (8X16)	6	
4	23810-61M00	CYLINDER, CLUTCH MASTER	1	
5	23820-79J00	CYLINDER ASSY, CLUTCH OPERATING	1	
6	23830-60R20	PIPE ASSY, CLUTCH OIL RH	1	
7	23840-54L00	PIPE, CLUTCH OIL HOUSING	1	
8	23856-64JA0	JOINT ASSY, CLUTCH PIPE	1	
9	23870-61M00	BRACKET, CLUTCH OIL HOSE	1	
10	23871-54L01	BRACKET, CLUTCH OIL PIPE	1	
11	23874-64J00	SLEEVE, CLUTCH PIPE JOINT	1	
12	23881-61M20	HOSE, CLUTCH RESERVOIR RH	1	
13	51761-79J00	CLAMP, BK PIPE SIDE MEMBER	1	
14	09159-08127	NUT	2	
15	09401-12405	CLIP (ID:12.5)	1	
16	01550-0620A	BOLT	3	
17	01550-0812A	BOLT	1	
18	02162-0612A	SCREW	2	
19	27978-71L00	CLAMP, CLUTCH OIL PIPE	1	

FIG.204A

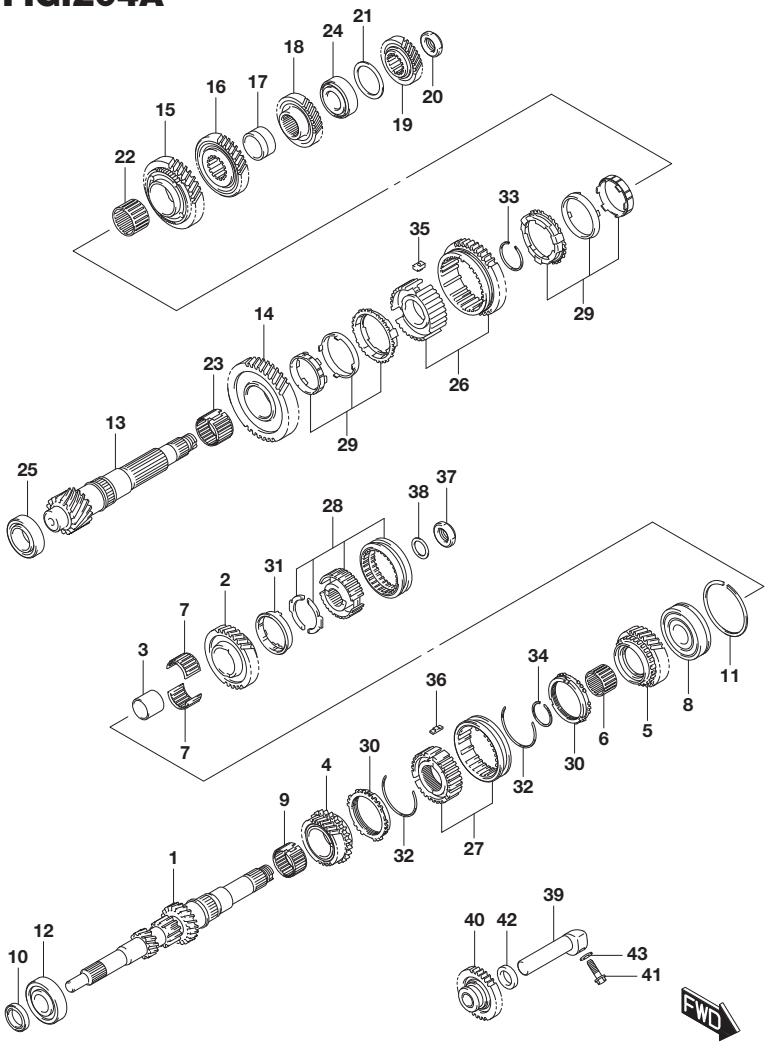

FIG.204A (1-I-13) MT TRANSMISSION GEAR (5MT)

REF NO.	PART NO.	DESCRIPTION	Q'TY	REMARKS
1	24111-61MA3	SHAFT, TRANSAXLE INPUT	1	
2	24114-51R00	GEAR, INPUT SHAFT 5TH	1	
3	24119-61MA0	SPACER, INPUT SHAFT 5TH GEAR	1	
4	24230-59J01	GEAR, INPUT SHAFT 3RD	1	
5	24240-51R00	GEAR, INPUT SHAFT 4TH	1	
6	24284-61MA0	BEARING, 4TH GEAR NEEDLE	1	
7	24285-61MA0	BEARING, 5TH GEAR NEEDLE	2	
8	09262-25106	BEARING (25X72X19)	1	
9	09263-35027	BEARING (35X40X22.8)	1	
10	09283-25088	OIL SEAL (25X38X6)	1	
11	09380-72002	RING (68.1X1.65)	1	
12	08133-63057	BEARING	1	
13	24131-77M00	SHAFT, TRANSMISSION COUNTER	1	
14	24311-59J00	GEAR, COUNTERSHAFT 1ST	1	
15	24321-59J01	GEAR, COUNTERSHAFT 2ND	1	
16	24331-70C00	GEAR, COUNTERSHAFT 3RD	1	
17	24336-80J00	SPACER, 3RD & 4TH GEAR	1	
18	24341-51R00	GEAR, COUNTERSHAFT 4TH	1	
19	24351-51R00	GEAR, COUNTERSHAFT 5TH	1	
20	09159-20009	NUT	1	
21-1	09181-41002	SHIM (41X52X0.55)	AR	
21-2	09181-41003	SHIM (41X52X0.6)	AR	
21-3	09181-41004	SHIM (41X52X0.65)	AR	
21-4	09181-41005	SHIM (41X52X0.7)	AR	
21-5	09181-41006	SHIM (41X52X0.75)	AR	
21-6	09181-41007	SHIM (41X52X0.8)	AR	
21-7	09181-41008	SHIM (41X52X0.85)	AR	
21-8	09181-41009	SHIM (41X52X0.9)	AR	
21-9	09181-41010	SHIM (41X52X0.95)	AR	
21-10	09181-41011	SHIM (41X52X1)	AR	
21-11	09181-41012	SHIM (41X52X1.05)	AR	
21-12	09181-41013	SHIM (41X52X1.1)	AR	
21-13	09181-41014	SHIM (41X52X1.15)	AR	
22	09263-35039	BEARING (35X50X28)	1	
23	09263-37009	BEARING (37X42X27.8)	1	
24	09265-25041	BEARING (25X52X19.25)	1	

FIG.204A

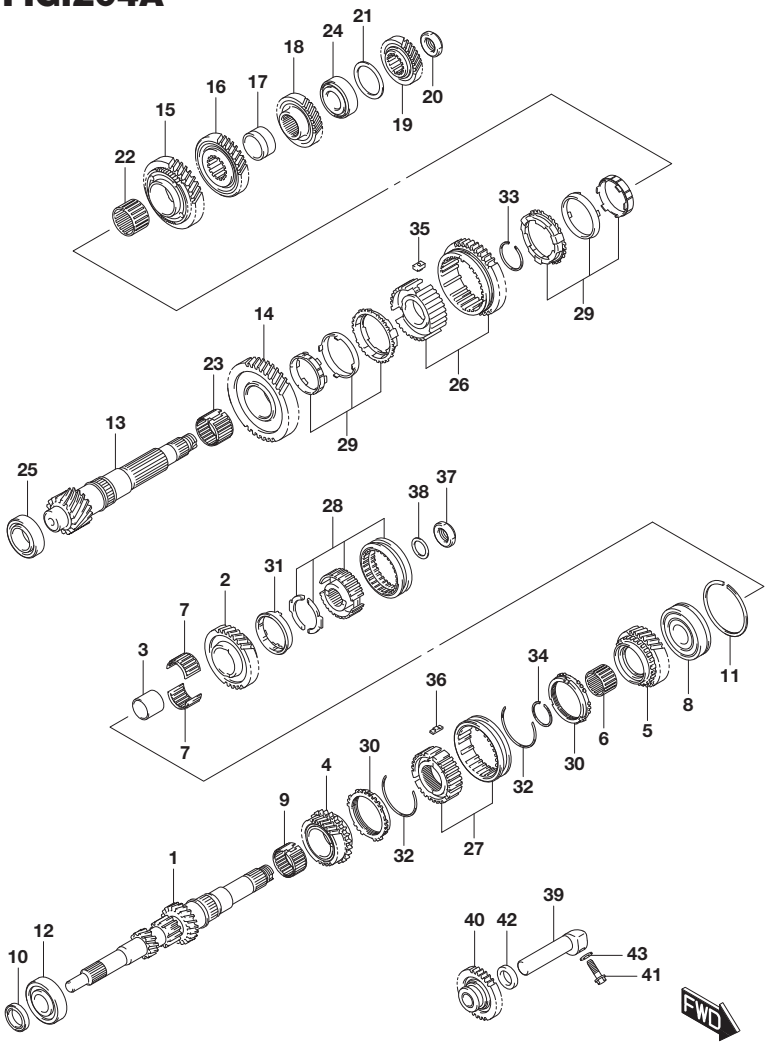

FIG.204A (1-I-14) MT TRANSMISSION GEAR (5MT)

REF NO.	PART NO.	DESCRIPTION	Q'TY	REMARKS
25	09265-30021	BEARING (30X55X17)	1	
26	24400-64R01	HUB ASSY, LOW SPEED SYNC	1	
27	24410-59J00	HUB ASSY, HIGH SPEED SYNC	1	
28	24420-55G20	HUB ASSY, 5TH SPEED SYNC	1	
29	24430-64R00	RING ASSY, 1ST & 2ND GEAR SYNC	2	
30	24432-60A00	RING, SYNC HIGH SPEED	2	
31	24435-84A20	RING, 5TH SPEED SYNC	1	
32	24442-70C00	SPRING, HIGH SPEED SYNC	2	
33	24451-70C00	CIRCLIP, LOW SPEED SYNC HUB	1	
34	24452-61MA0	CIRCLIP, HIGH SPEED SYNC HUB	1	
35	24471-64R00	KEY, SYNCHRONIZER	3	
36	24472-60B00	KEY, SYNCHRONIZER	3	
37	09159-20009	NUT	1	
38	09160-21005	WASHER (21X30X1)	1	
39	24551-70C02	SHAFT, T/M REV GEAR	1	
40	24560-70C60	GEAR, REVERSE IDLER	1	
41	24565-60B00	BOLT, REVERSE SHAFT	1	
42	09161-18004	WASHER (18X27X5.5)	1	
43	09168-08030	GASKET (8.2X17X1)	1	

FIG.204B

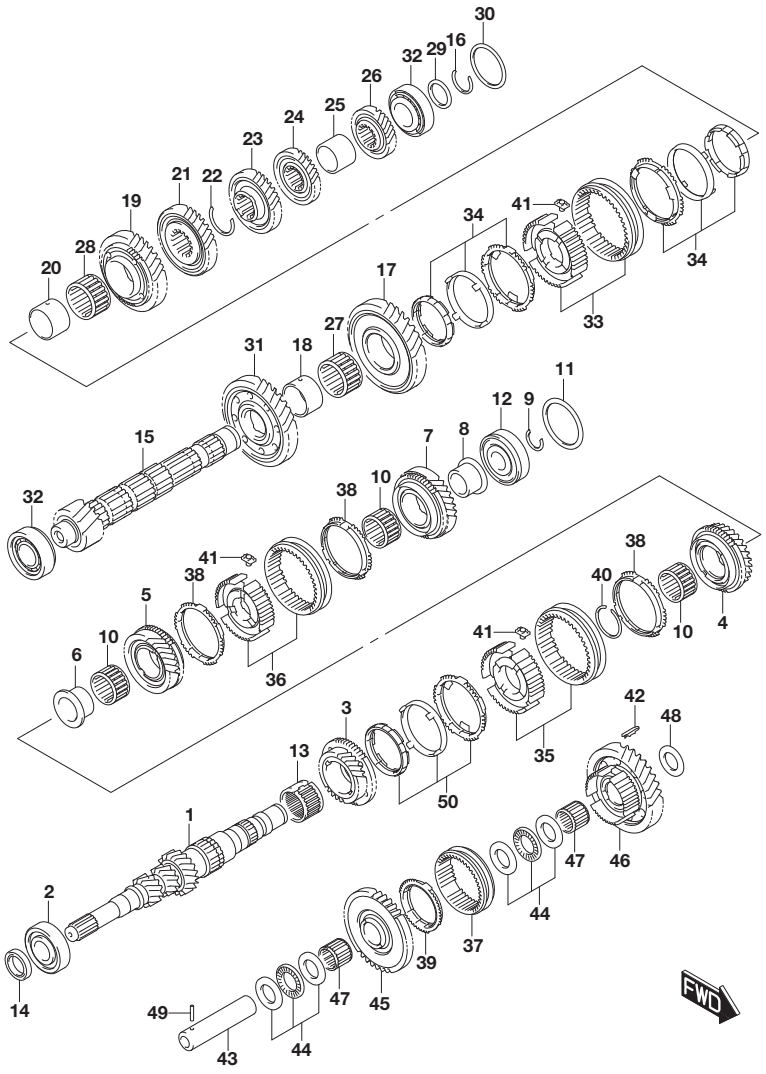

FIG.204B (1-J-2) MT TRANSMISSION GEAR (6MT)

REF NO.	PART NO.	DESCRIPTION	Q'TY	REMARKS
1	24111-68M00	SHAFT, TRANSAXLE INPUT	1	
2	24155-54L20	BEARING, INPUT SHAFT RH	1	
3-1	24230-68M00	GEAR, INPUT SHAFT 3RD	1	K14C
3-2	24230-68M20	GEAR, INPUT SHAFT 3RD	1	K14D
4-1	24240-68M00	GEAR, INPUT SHAFT 4TH	1	K14C
4-2	24240-68M20	GEAR, INPUT SHAFT 4TH	1	K14D
5-1	24250-68M00	GEAR, INPUT SHAFT 5TH	1	K14C
5-2	24250-68M20	GEAR, INPUT SHAFT 5TH	1	K14D
6	24255-54L00	SPACER, INPUT SHAFT 5TH GEAR	1	
7-1	24260-68M00	GEAR, INPUT SHAFT 6TH	1	K14C
7-2	24260-68M20	GEAR, INPUT SHAFT 6TH	1	K14D
8	24265-54L00	SPACER, INPUT SHAFT 6TH GEAR	1	
9-1	24266-54L00-181	CIRCLIP, INPUT SFT LH BRG (T:1.81)	AR	
9-2	24266-54L00-186	CIRCLIP, INPUT SFT LH BRG (T:1.86)	AR	
9-3	24266-54L00-191	CIRCLIP, INPUT SFT LH BRG (T:1.91)	AR	
9-4	24266-54L00-196	CIRCLIP, INPUT SFT LH BRG (T:1.96)	AR	
9-5	24266-54L00-201	CIRCLIP, INPUT SFT LH BRG (T:2.01)	AR	
9-6	24266-54L00-206	CIRCLIP, INPUT SFT LH BRG (T:2.06)	AR	
9-7	24266-54L00-211	CIRCLIP, INPUT SFT LH BRG (T:2.11)	AR	
9-8	24266-54L00-216	CIRCLIP, INPUT SFT LH BRG (T:2.16)	AR	
9-9	24266-54L00-221	CIRCLIP, INPUT SFT LH BRG (T:2.21)	AR	
9-10	24266-54L00-226	CIRCLIP, INPUT SFT LH BRG (T:2.26)	AR	
10	24284-54L00	BEARING, 4TH & 5TH & 6TH GR NDL	3	

FIG.204B

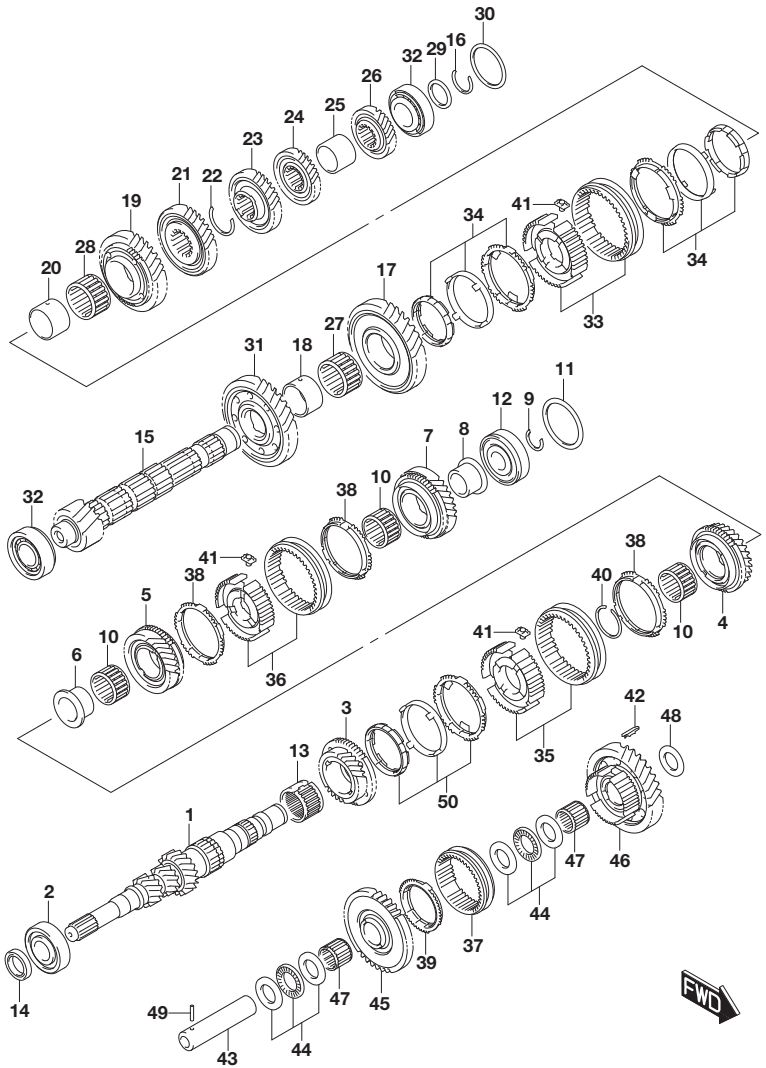

FIG.204B (1-J-3) MT TRANSMISSION GEAR (6MT)

REF NO.	PART NO.	DESCRIPTION	Q'TY	REMARKS
11-1	24295-79JA0-104	SHIM, INPUT SFT BRG LH (T:1.04)	AR	
11-2	24295-79JA0-108	SHIM, INPUT SFT BRG LH (T:1.08)	AR	
11-3	24295-79JA0-112	SHIM, INPUT SFT BRG LH (T:1.12)	AR	
11-4	24295-79JA0-116	SHIM, INPUT SFT BRG LH (T:1.16)	AR	
11-5	24295-79JA0-120	SHIM, INPUT SFT BRG LH (T:1.20)	AR	
11-6	24295-79JA0-124	SHIM, INPUT SFT BRG LH (T:1.24)	AR	
11-7	24295-79JA0-128	SHIM, INPUT SFT BRG LH (T:1.28)	AR	
11-8	24295-79JA0-132	SHIM, INPUT SFT BRG LH (T:1.32)	AR	
11-9	24295-79JA0-136	SHIM, INPUT SFT BRG LH (T:1.36)	AR	
11-10	24295-79JA0-140	SHIM, INPUT SFT BRG LH (T:1.40)	AR	
11-11	24295-79JA0-144	SHIM, INPUT SFT BRG LH (T:1.44)	AR	
11-12	24295-79JA0-148	SHIM, INPUT SFT BRG LH (T:1.48)	AR	
11-13	24295-79JA0-152	SHIM, INPUT SFT BRG LH (T:1.52)	AR	
11-14	24295-79JA0-156	SHIM, INPUT SFT BRG LH (T:1.56)	AR	
11-15	24295-79JA0-160	SHIM, INPUT SFT BRG LH (T:1.60)	AR	
11-16	24295-79JA0-164	SHIM, INPUT SFT BRG LH (T:1.64)	AR	
11-17	24295-79JA0-168	SHIM, INPUT SFT BRG LH (T:1.68)	AR	
11-18	24295-79JA0-172	SHIM, INPUT SFT BRG LH (T:1.72)	AR	

FIG.204B

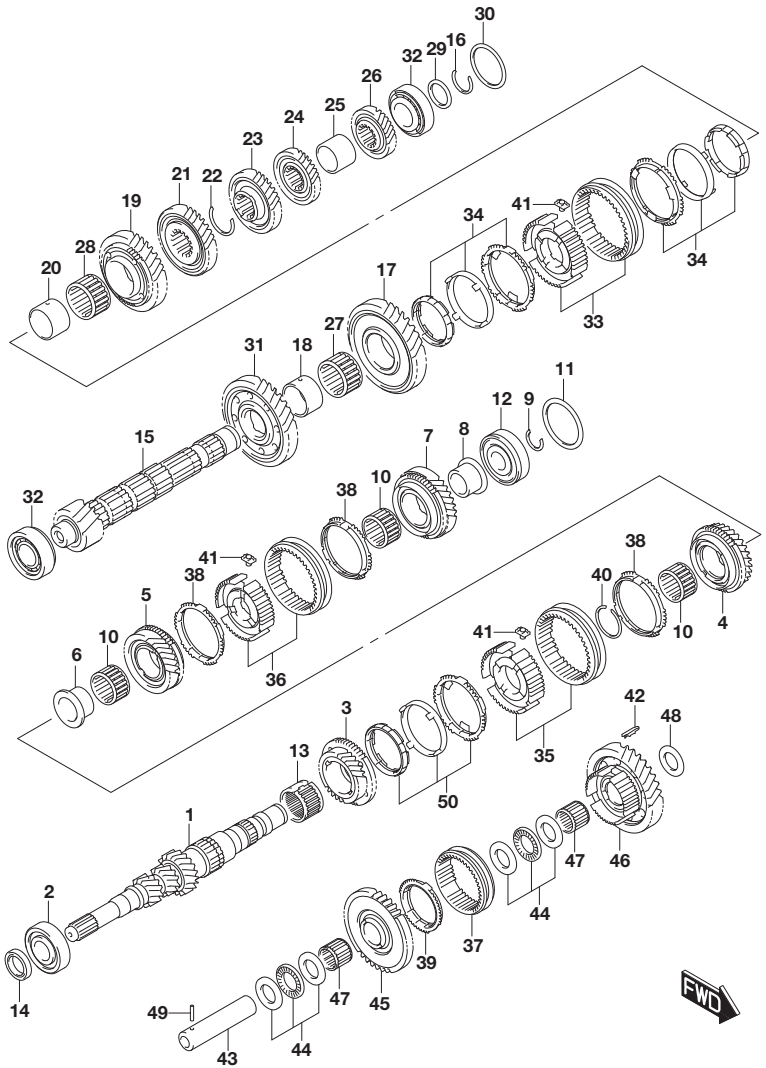

FIG.204B (1-J-4) MT TRANSMISSION GEAR (6MT)

REF NO.	PART NO.	DESCRIPTION	Q'TY	REMARKS
11-19	24295-79JA0-176	SHIM, INPUT SFT BRG LH (T:1.76)	AR	
11-20	24295-79JA0-180	SHIM, INPUT SFT BRG LH (T:1.80)	AR	
11-21	24295-79JA0-184	SHIM, INPUT SFT BRG LH (T:1.84)	AR	
11-22	24295-79JA0-188	SHIM, INPUT SFT BRG LH (T:1.88)	AR	
11-23	24295-79JA0-192	SHIM, INPUT SFT BRG LH (T:1.92)	AR	
11-24	24295-79JA0-196	SHIM, INPUT SFT BRG LH (T:1.96)	AR	
12	09262-25106	BEARING (25X72X19)	1	
13	09263-37005	BEARING (37X42X23.8)	1	
14	09283-25088	OIL SEAL (25X38X6)	1	
15-1	24131-68M00	SHAFT, TRANSMISSION COUNTER	1	K14C
15-2	24131-68M20	SHAFT, TRANSMISSION COUNTER	1	K14D
16-1	24266-79JA0-181	CIRCLIP, CTSHFT BRG LH (T:1.81)	AR	
16-2	24266-79JA0-186	CIRCLIP, CTSHFT BRG LH (T:1.86)	AR	
16-3	24266-79JA0-191	CIRCLIP, CTSHFT BRG LH (T:1.91)	AR	
16-4	24266-79JA0-196	CIRCLIP, CTSHFT BRG LH (T:1.96)	AR	
16-5	24266-79JA0-201	CIRCLIP, CTSHFT BRG LH (T:2.01)	AR	
16-6	24266-79JA0-206	CIRCLIP, CTSHFT BRG LH (T:2.06)	AR	
16-7	24266-79JA0-210	CIRCLIP, CTSHFT BRG LH (T:2.10)	AR	
16-8	24266-79JA0-213	CIRCLIP, CTSHFT BRG LH (T:2.13)	AR	
16-9	24266-79JA0-216	CIRCLIP, CTSHFT BRG LH (T:2.16)	AR	

FIG.204B

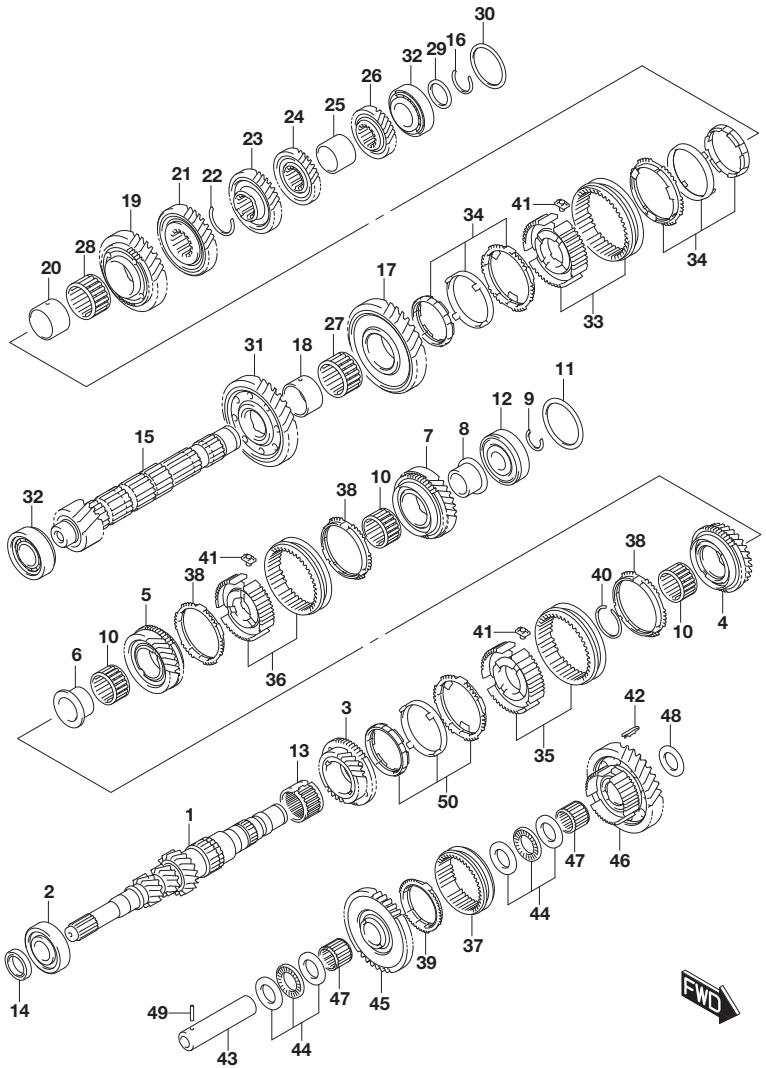

FIG.204B (1-J-5) MT TRANSMISSION GEAR (6MT)

REF NO.	PART NO.	DESCRIPTION	Q'TY	REMARKS
16-10	24266-79JA0-219	CIRCLIP, CTSHFT BRG LH (T:2.19)	AR	
16-11	24266-79JA0-222	CIRCLIP, CTSHFT BRG LH (T:2.22)	AR	
16-12	24266-79JA0-225	CIRCLIP, CTSHFT BRG LH (T:2.25)	AR	
16-13	24266-79JA0-228	CIRCLIP, CTSHFT BRG LH (T:2.28)	AR	
17	24311-57L00	GEAR, COUNTERSHAFT 1ST	1	
18	24315-54L00	SPACER, COUNTERSHAFT 1ST GEAR	1	
19	24321-68M00	GEAR, COUNTERSHAFT 2ND	1	
20	24325-54L00	SPACER, COUNTERSHAFT 2ND GEAR	1	
21-1	24331-68M00	GEAR, COUNTERSHAFT 3RD	1	K14C
21-2	24331-68M20	GEAR, COUNTERSHAFT 3RD	1	K14D
22-1	24336-54L00-200	CIRCLIP, COUNTERSHAFT 3RD (T:2.00)	AR	
22-2	24336-54L00-210	CIRCLIP, COUNTERSHAFT 3RD (T:2.10)	AR	
22-3	24336-54L00-220	CIRCLIP, COUNTERSHAFT 3RD (T:2.20)	AR	
22-4	24336-54L00-230	CIRCLIP, COUNTERSHAFT 3RD (T:2.30)	AR	
22-5	24336-54L00-240	CIRCLIP, COUNTERSHAFT 3RD (T:2.40)	AR	
22-6	24336-54L00-250	CIRCLIP, COUNTERSHAFT 3RD (T:2.50)	AR	
23-1	24341-68M00	GEAR, COUNTERSHAFT 4TH	1	K14C
23-2	24341-68M20	GEAR, COUNTERSHAFT 4TH	1	K14D
24-1	24351-68M00	GEAR, COUNTERSHAFT 5TH	1	K14C
24-2	24351-68M20	GEAR, COUNTERSHAFT 5TH	1	K14D
25	24355-54L00	SPACER, COUNTERSHAFT 5TH GEAR	1	
26-1	24361-68M00	GEAR, COUNTERSHAFT 6TH	1	K14C
26-2	24361-68M20	GEAR, COUNTERSHAFT 6TH	1	K14D
27	24381-54L00	BEARING, 1ST GEAR NEEDLE	1	
28	24382-54L00	BEARING, 2ND GEAR NEEDLE	1	
29	24383-79JA0	WASHER, COUNTERSHAFT BRG LH	1	

FIG.204B

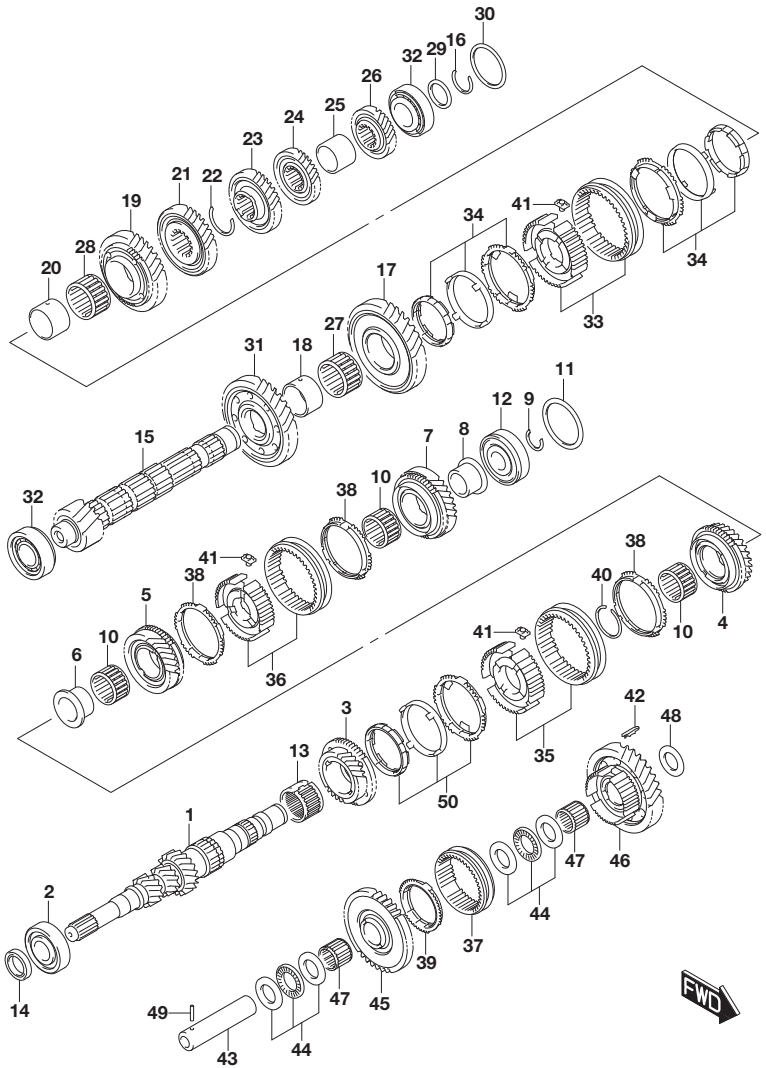

FIG.204B (1-J-6) MT TRANSMISSION GEAR (6MT)

REF NO.	PART NO.	DESCRIPTION	Q'TY	REMARKS
30-1	24395-54L00-105	SHIM, COUNTERSHAFT LH BRG (T:1.05)	AR	
30-2	24395-54L00-110	SHIM, COUNTERSHAFT LH BRG (T:1.10)	AR	
30-3	24395-54L00-115	SHIM, COUNTERSHAFT LH BRG (T:1.15)	AR	
30-4	24395-54L00-120	SHIM, COUNTERSHAFT LH BRG (T:1.20)	AR	
30-5	24395-54L00-125	SHIM, COUNTERSHAFT LH BRG (T:1.25)	AR	
30-6	24395-54L00-130	SHIM, COUNTERSHAFT LH BRG (T:1.30)	AR	
30-7	24395-54L00-135	SHIM, COUNTERSHAFT LH BRG (T:1.35)	AR	
30-8	24395-54L00-137	SHIM, COUNTERSHAFT LH BRG (T:1.375)	AR	
30-9	24395-54L00-140	SHIM, COUNTERSHAFT LH BRG (T:1.40)	AR	
30-10	24395-54L00-142	SHIM, COUNTERSHAFT LH BRG (T:1.425)	AR	
30-11	24395-54L00-145	SHIM, COUNTERSHAFT LH BRG (T:1.45)	AR	
30-12	24395-54L00-147	SHIM, COUNTERSHAFT LH BRG (T:1.475)	AR	
30-13	24395-54L00-150	SHIM, COUNTERSHAFT LH BRG (T:1.50)	AR	
30-14	24395-54L00-152	SHIM, COUNTERSHAFT LH BRG (T:1.525)	AR	
30-15	24395-54L00-155	SHIM, COUNTERSHAFT LH BRG (T:1.55)	AR	
30-16	24395-54L00-160	SHIM, COUNTERSHAFT LH BRG (T:1.60)	AR	
30-17	24395-54L00-165	SHIM, COUNTERSHAFT LH BRG (T:1.65)	AR	
30-18	24395-54L00-170	SHIM, COUNTERSHAFT LH BRG (T:1.70)	AR	

FIG.204B

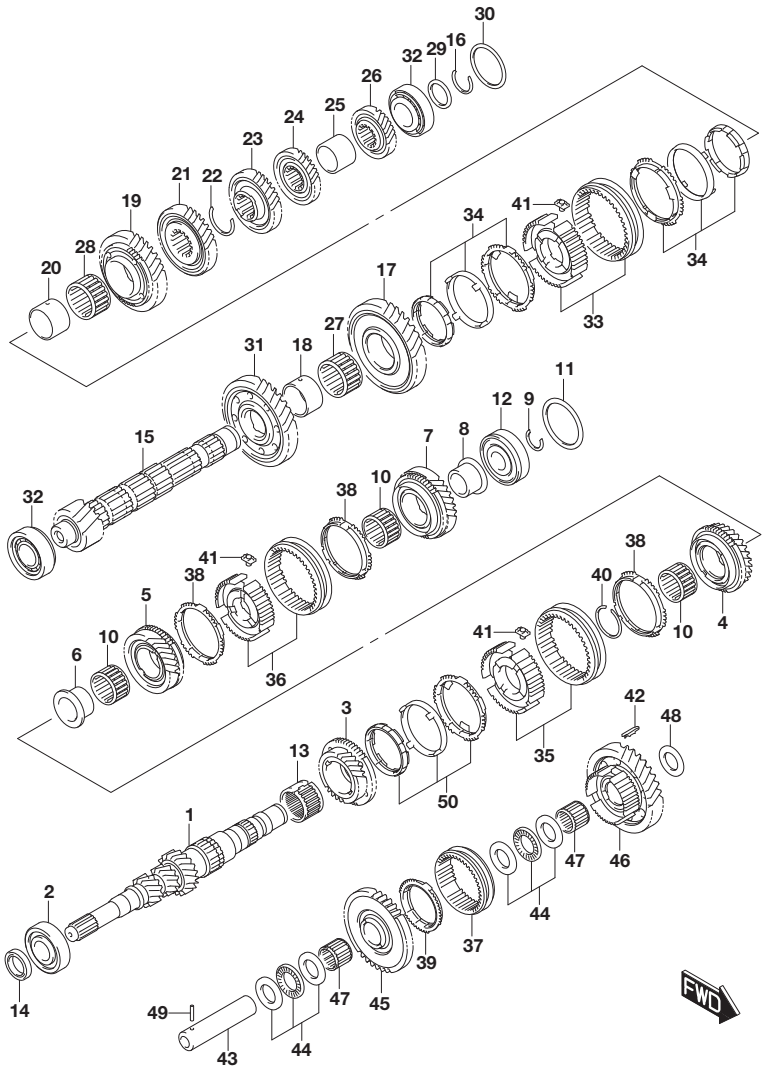

FIG.204B (1-J-7) MT TRANSMISSION GEAR (6MT)

REF NO.	PART NO.	DESCRIPTION	Q'TY	REMARKS
30-19	24395-54L00-175	SHIM, COUNTERSHAFT LH BRG (T:1.75)	AR	
30-20	24395-54L00-180	SHIM, COUNTERSHAFT LH BRG (T:1.80)	AR	
30-21	24395-54L00-185	SHIM, COUNTERSHAFT LH BRG (T:1.85)	AR	
30-22	24395-54L00-190	SHIM, COUNTERSHAFT LH BRG (T:1.90)	AR	
30-23	24395-54L00-195	SHIM, COUNTERSHAFT LH BRG (T:1.95)	AR	
30-24	24395-54L00-200	SHIM, COUNTERSHAFT LH BRG (T:2.00)	AR	
31	24581-54L00	GEAR, COUNTERSHAFT REVERSE	1	
32	09265-30026	BEARING (30X62X17.25)	2	
33	24400-54L00	HUB ASSY, LOW SPEED SYNC	1	
34	24401-54L00	RING ASSY, 1ST & 2ND GEAR SYNC	2	
35	24410-54L00	HUB ASSY, HIGH SPEED SYNC	1	
36	24420-70L00	HUB ASSY, 5TH & 6TH SPEED SYNC	1	
37	24424-54L40	SLEEVE, REV GEAR SYNC	1	
38	24435-54L00	RING, 4TH & 5TH & 6TH GR SYNC	3	
39	24439-54L00	RING, REV GEAR SYNC	1	
40	24452-54L00	CIRCLIP, HIGH SPEED SYNC HUB	1	
41	24471-54L00	KEY, SYNCHRONIZER	9	
42	24474-79JB0	KEY, REV SYNC	3	
43	24551-79JA0	SHAFT, TRANSAXLE REV GEAR	1	
44	24555-79JA0	BEARING SET, REVERSE IDLER THR	2	
45	24571-54L20	GEAR, REVERSE IDLER RH	1	
46	24560-54L00	GEAR, REV IDLER LH	1	
47	24580-57L00	BEARING, REVERSE IDLER NEEDLE	2	

FIG.204B

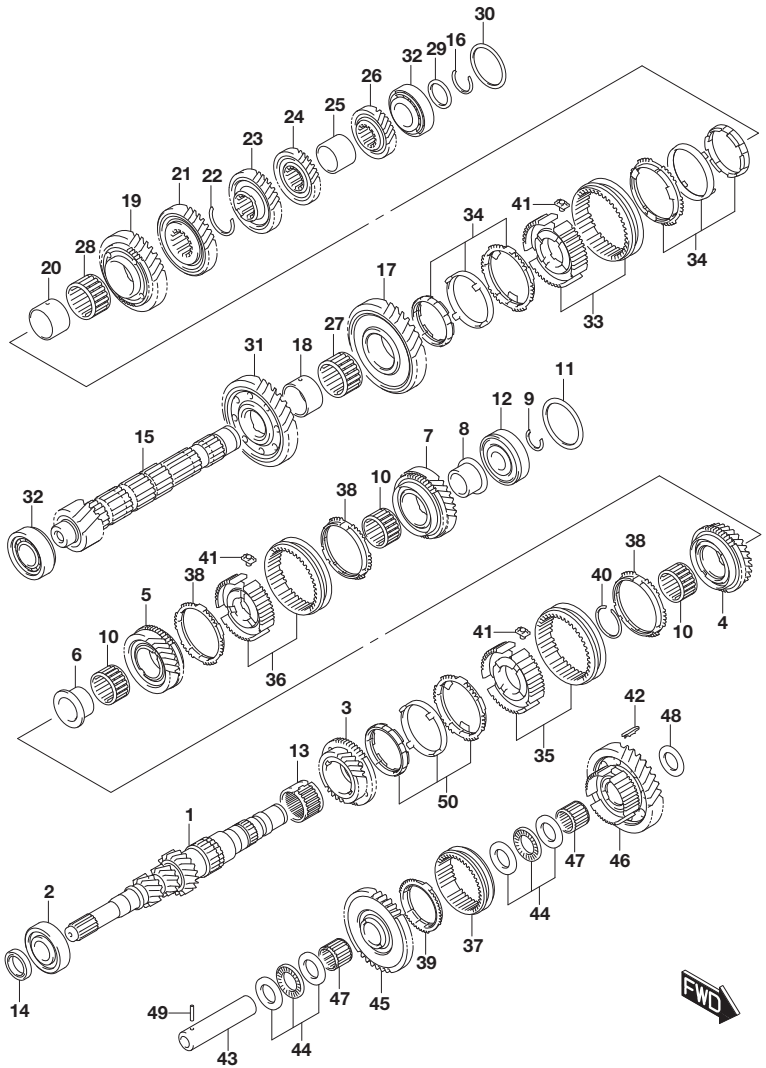

FIG.204B (1-J-8) MT TRANSMISSION GEAR (6MT)

REF NO.	PART NO.	DESCRIPTION	Q'TY	REMARKS
48-1	24585-79JA0-176	WASHER, REVERSE GEAR SHAFT (T:1.76)	AR	
48-2	24585-79JA0-184	WASHER, REVERSE GEAR SHAFT (T:1.84)	AR	
48-3	24585-79JA0-192	WASHER, REVERSE GEAR SHAFT (T:1.92)	AR	
48-4	24585-79JA0-200	WASHER, REVERSE GEAR SHAFT (T:2.00)	AR	
48-5	24585-79JA0-208	WASHER, REVERSE GEAR SHAFT (T:2.08)	AR	
48-6	24585-79JA0-216	WASHER, REVERSE GEAR SHAFT (T:2.16)	AR	
48-7	24585-79JA0-224	WASHER, REVERSE GEAR SHAFT (T:2.24)	AR	
48-8	24585-79JA0-232	WASHER, REVERSE GEAR SHAFT (T:2.32)	AR	
48-9	24585-79JA0-240	WASHER, REVERSE GEAR SHAFT (T:2.40)	AR	
48-10	24585-79JA0-248	WASHER, REVERSE GEAR SHAFT (T:2.48)	AR	
49	09205-03035	PIN (3X22)	1	
50	24403-54L00	RING ASSY, 3RD GEAR SYNC	1	

FIG.206A

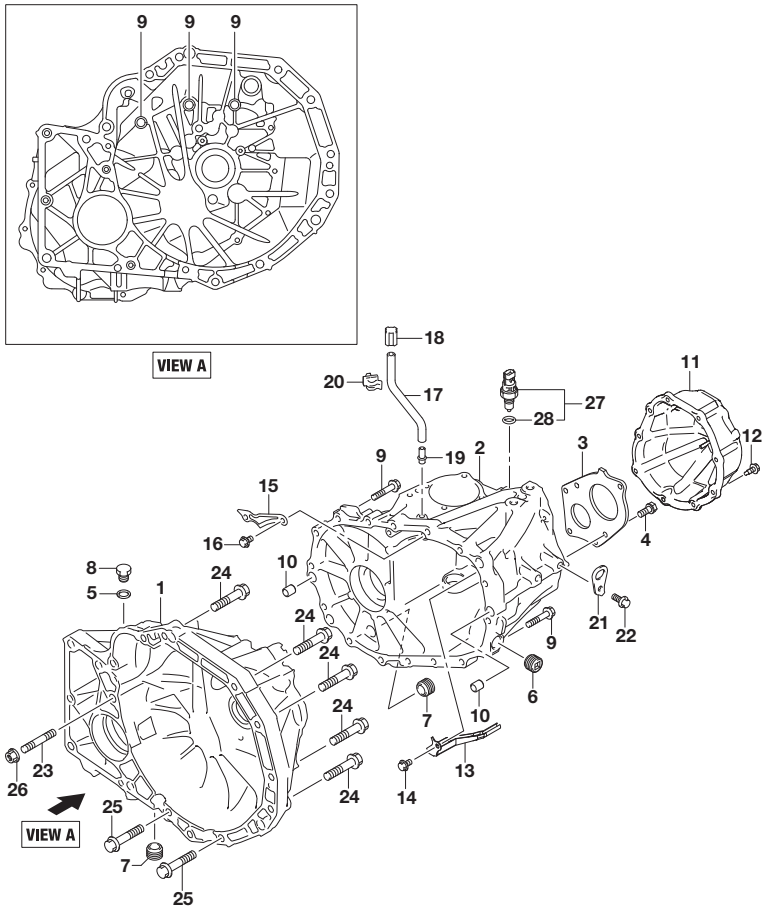

FIG.206A (1-J-9) MT TRANSMISSION CASE (5MT)

REF NO.	PART NO.	DESCRIPTION	Q'TY	REMARKS
1	24711-54P02	CASE, TRANSMISSION RH	1	
2	24721-61MA1	CASE, TRANSMISSION LEFT	1	
3	24725-61MA0	PLATE, LEFT BRG STOPPER	1	
4	24728-60MA0	BOLT, T/M LH BRG STOPPER PLATE	6	
5	09168-14011	GASKET (14X20X1.5)	1	
6	09246-16010	PLUG (L:15)	1	
7	09246-16010	PLUG (L:15)	2	
8	09247-14029	PLUG (14X12)	1	
9	01550-0840A	BOLT	16	
10	04211-13149	PIN	2	
11	24730-54G21	COVER, TRANSAXLE SIDE	1	
12	09135-06027	BOLT (6X16)	9	
13	24810-70C00	GUTTER, INPUT OIL	1	
14	09103-06285	BOLT (6X12)	1	
15	24815-79J00	PLATE, BREATHER COVER	1	
16	09103-06285	BOLT (6X12)	2	
17	24825-69L00	HOSE, BREATHER	1	
18	27991-65D01	PLUG, BREATHER	1	
19	09364-08004	UNION (8X24.5)	1	
20	09403-11314	CLAMP	1	
21	24855-71L00	HOOK, TRANSAXLE	1	
22	01550-0820A	BOLT	1	
23	01421-1045A	STUD BOLT	1	
24	01550-1050A	BOLT	5	
25	01550-1050A	BOLT	2	
26	08316-1010A	NUT	1	
27	37610-76G10	SWITCH ASSY, BACK UP	1	
28	09280-11002	.O RING (D:1.9,ID:11.4)	1	

FIG.206B

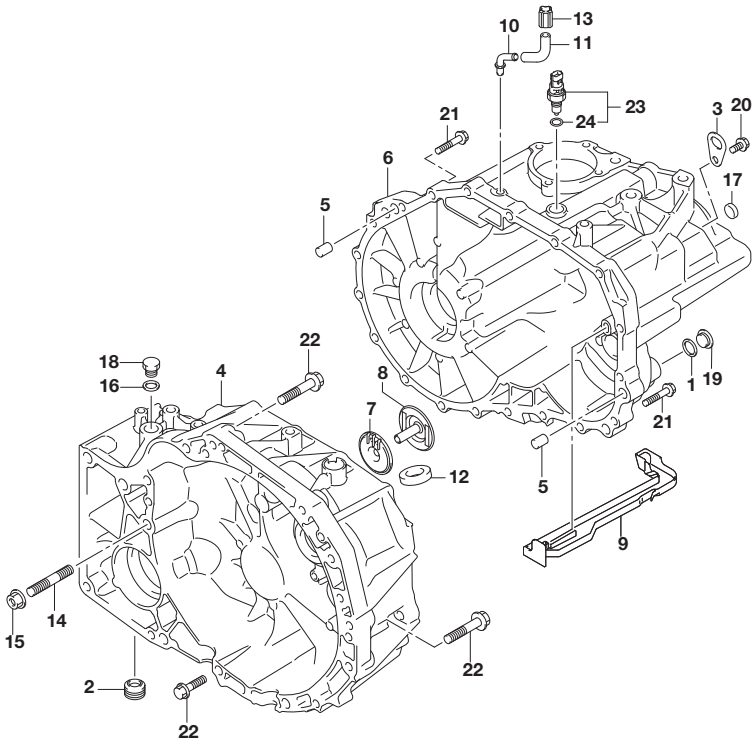

FIG.206B (1-J-10) MT TRANSMISSION CASE (6MT)

REF NO.	PART NO.	DESCRIPTION	Q'TY	REMARKS
1	11216-77E00	GASKET (18X23.5X0.84)	1	
2	09246-16010	PLUG (L:15)	1	
3	11851-72B21	HOOK	1	
4	24711-68M00	CASE, TRANSAXLE RIGHT	1	
5	24719-79JA0	PIN, TRANSAXLE CASE KNOCK	2	
6	24721-68M00	CASE, TRANSAXLE LEFT	1	
7	24733-54L00	CHANNEL, OIL COUNTERSHAFT	1	
8	24734-54L00	CHANNEL, OIL INPUT SHAFT	1	
9	24811-54L00	GUTTER, INPUT OIL	1	
10	24821-59J00	UNION, BREATHER	1	
11	24825-63J00	HOSE, BREATHER	1	
12	24861-71B70	MAGNET	1	
13	27991-65D01	PLUG, BREATHER	1	
14	01421-1045A	STUD BOLT	1	
15	08316-1010A	NUT	1	
16	09168-14011	GASKET (14X20X1.5)	1	
17	09241-20006	PLUG (OD:20,H:6)	2	
18	09247-14029	PLUG (14X12)	1	
19	09248-18011	PLUG (18X8)	1	
20	01550-0816A	BOLT	1	
21	01550-0840A	BOLT	19	
22	01550-1050A	BOLT	7	
23	37610-76G10	SWITCH ASSY, BACK UP	1	
24	09280-11002	.O RING (D:1.9,ID:11.4)	1	

FIG.208A

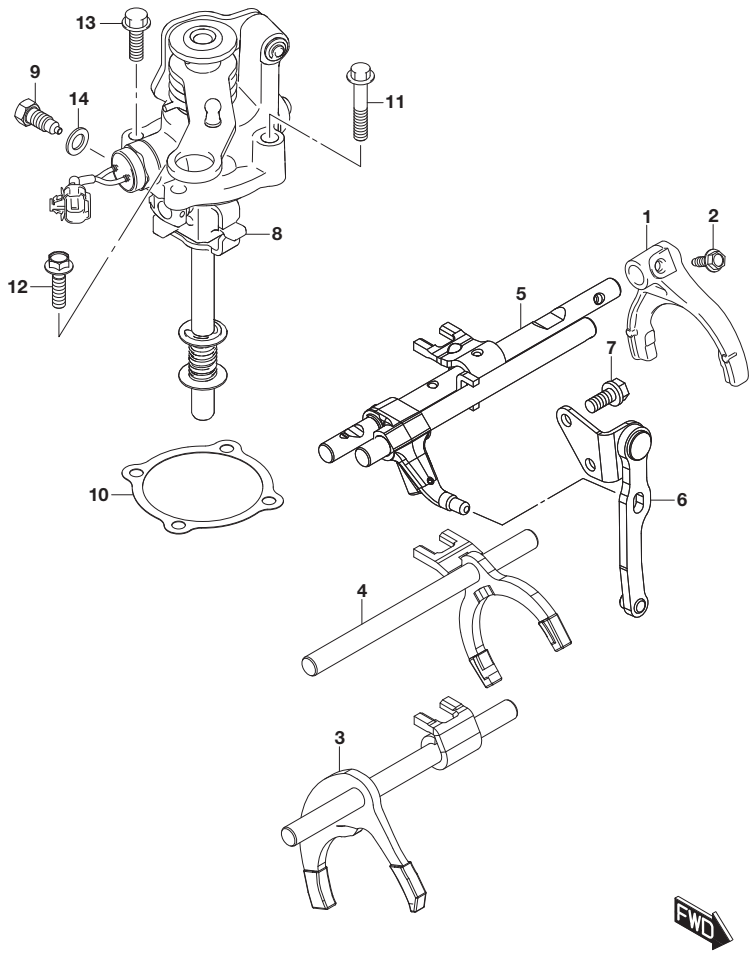

FIG.208A (1-J-11) MT GEAR SHIFT FORK (5MT)

REF NO.	PART NO.	DESCRIPTION	Q'TY	REMARKS
1	25231-60MA0	FORK, 5TH GEAR SHIFT	1	
2	25291-70C00	BOLT, LOW & HIGH SPEED FORK	1	
3	25401-71L20	SHAFT, LOW SPEED GR SHF	1	
4	25402-71L20	SHAFT, HIGH SPEED GR SHF	1	
5	25403-71L01	SHAFT, 5TH & REV GEAR SHFIT	1	
6	25460-70C00	LEVER, REVERSE GEAR SHIFT	1	
7	01570-0820A	BOLT	2	
8	25010-51810	SHAFT SET, GR SHF & SEL	1	
9	25321-74PE0	BOLT, GEAR SHF INTERLOCK	1	
10	25574-74B00	GASKET, GEAR SHF GUIDE CASE	1	
11	09103-08366	BOLT (8X45)	2	
12	09103-08419	BOLT (8X25)	1	
13	01550-0825A	BOLT	1	
14	08322-0110A	WASHER	1	

FIG.208B

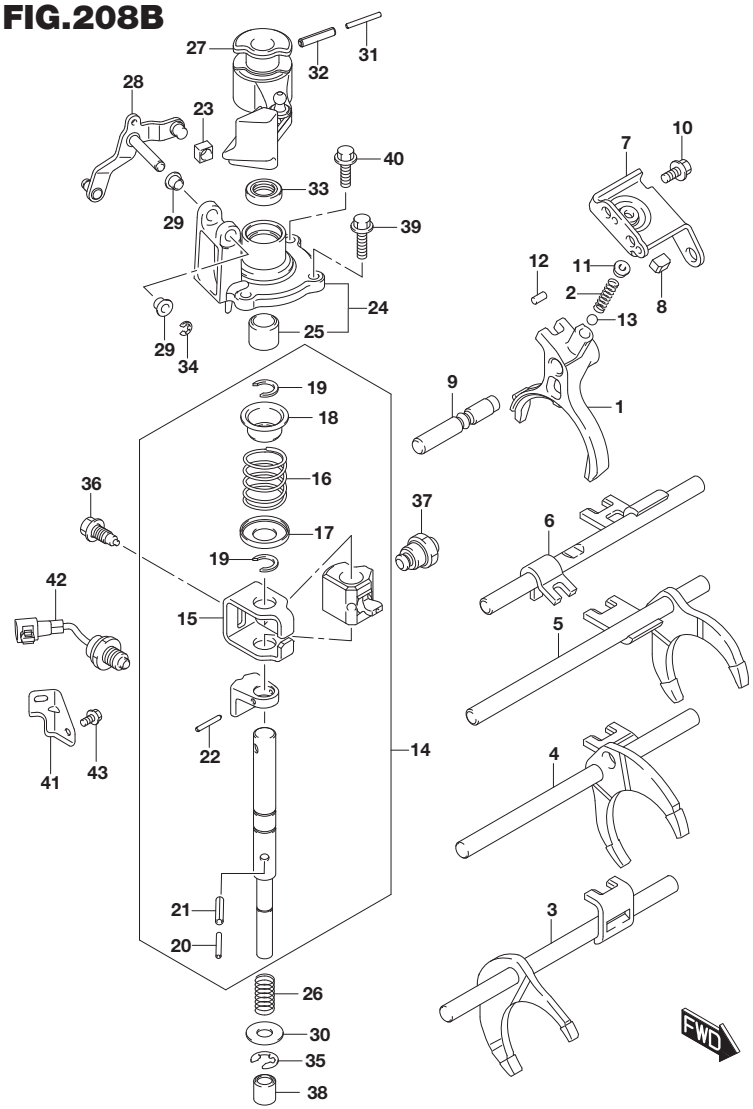

FIG.208B (1-J-12) MT GEAR SHIFT FORK (6MT)

REF NO.	PART NO.	DESCRIPTION	Q'TY	REMARKS
1	25240-54L40	FORK, REVERSE GEAR SHF	1	
2	25255-60B01	SPRING, REV GEAR SHF ARM	1	
3	25401-54L22	SHAFT, LOW SPEED GEAR SHF	1	
4	25402-54L02	SHAFT, HIGH SPEED GEAR SHF	1	
5	25403-54L02	SHAFT, 5TH & 6TH GR SHF	1	
6	25404-54L01	SHAFT, REV GEAR SHF	1	
7	25460-54L02	LEVER, REV GR SHF	1	
8	25464-79JA0	CAP, REV GEAR SHF LEVER	1	
9	25491-54L40	SHAFT, REVERSE GEAR SHF FORK	1	
10	09103-08283-A05	BOLT (8X16)	2	
11	09248-10006	PLUG (10X5)	1	
12	04221-06129	PIN	2	
13	06111-10003	BALL	1	
14	25540-68M00	LEVER ASSY, GEAR SHF & SEL	1	
15	25311-54L00	.PLATE, GEAR SHIFT INTERLOCK	1	
16	25577-62MA0	.SPRING, 5TH & 6TH SEL	1	
17	25586-54L00	.HOLDER, 5TH & 6TH SEL SPR LOWER	1	
18	25587-54L00	.HOLDER, 5TH & 6TH SEL SPR UPPER	1	
19	25588-54L00	.RING, SHIFT & SELECT SHAFT SNAP	2	
20	09205-03042	.PIN (3.5X32)	1	
21	09205-06020	.PIN (6X32)	1	
22	09205-04013	.PIN (4X28)	1	
23	25559-79J00	BUSH, SELECT LEVER	1	
24	25570-70L00	CASE, GEAR SHF GUIDE	1	
25	25591-54L00	.BEARING, SHF SFT LINER UPPER	1	
26	25576-54L00	SPRING, 1ST & 2ND SELECT	1	
27	25610-68M00	LEVER, SHIFT CABLE	1	
28	25620-62MA0	LEVER, SEL CABLE	1	
29	69314-60G00	BUSH, SELECT LEVER	2	
30	09160-13503	WASHER (13X30.5X1.5)	1	
31	09205-03042	PIN (3.5X32)	1	
32	09205-06020	PIN (6X32)	1	
33	09283-18009	OIL SEAL (16.5X30X7)	1	

FIG.208B

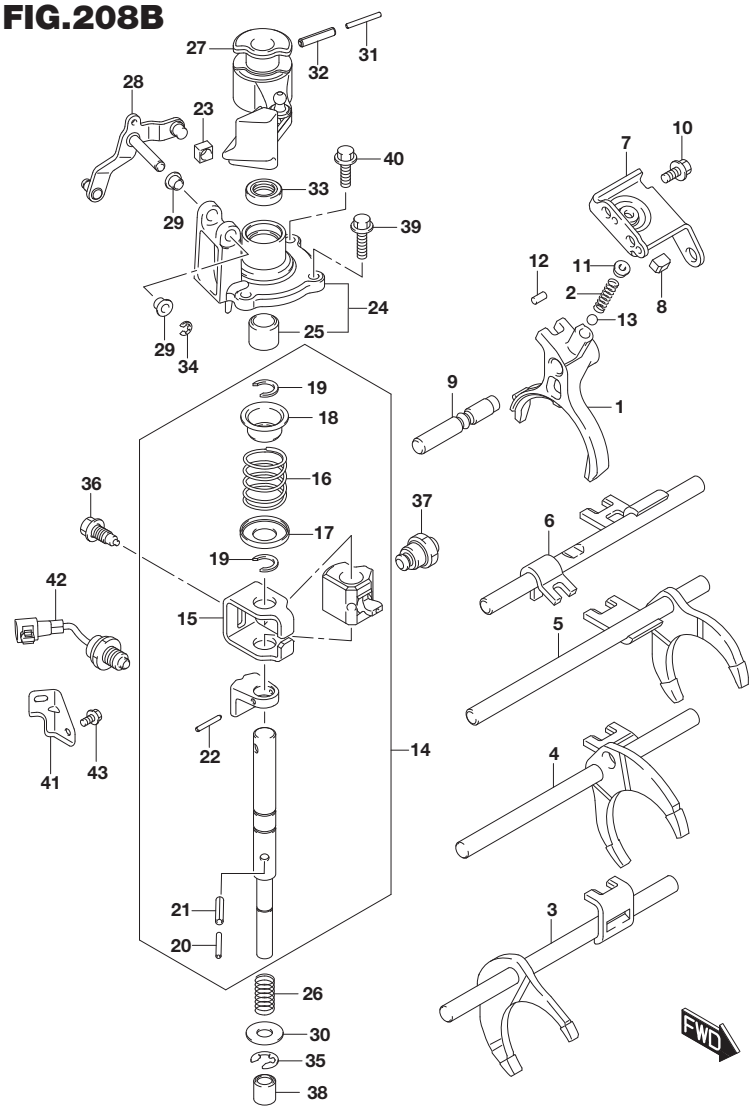

FIG.208B (1-J-13) MT GEAR SHIFT FORK (6MT)

REF NO.	PART NO.	DESCRIPTION	Q'TY	REMARKS
34	08332-1106A	E-RING	1	
35	08332-1110A	E-RING	1	
36	25321-68R01	BOLT, GEAR SHF INTERLOCK	1	
37	25580-54L60	SPRING, GEAR SHIFT LOCATING	1	
38	25592-54L00	BEARING, SHF SFT LINER LOWER	1	
39	09103-08419	BOLT (8X25)	2	
40	01550-0825A	BOLT	2	
41	36651-85L10	BRACKET, HARN	1	
42-1	37710-71M00	SWITCH ASSY, NEUTRAL	1	TYPE 3:K14C
42-2	37710-71M01	SWITCH ASSY, NEUTRAL	1	TYPE 3:K14D
42-3	37710-71M01	SWITCH ASSY, NEUTRAL	1	TYPE 4
43	01550-0612A	BOLT	1	

FIG.210A

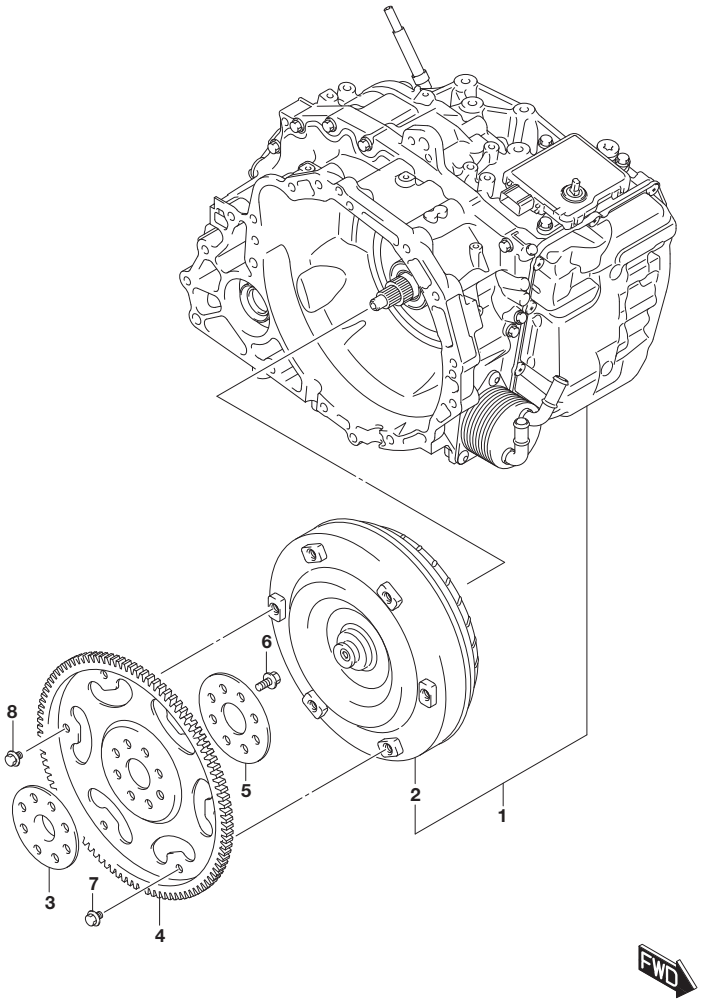

FIG.210A (1-J-14) AT TRANSMISSION ASSY (6AT:K10C)

REF NO.	PART NO.	DESCRIPTION	Q'TY	REMARKS
1-1	20019-86R11	TRANSMISSION ASSY, AUTOMATIC	1	2WD
1-2	20019-86RH1	TRANSMISSION ASSY, AUTOMATIC	1	4WD
2	22710-50R11	.CONVERTER, TORQUE	1	
3	22611-68M10	FLANGE, T/C DRIVE PLATE	1	
4	22620-68M10	PLATE, T/C DRIVE	1	
5	22631-68M10	PLATE, T/C DRIVE REAR	1	
6	09103-10440	BOLT (10X18.5)	8	
7	09103-08516	BOLT (8X9.5)	5	
8	09103-08517	BOLT (8X9.5)	1	

FIG.210B

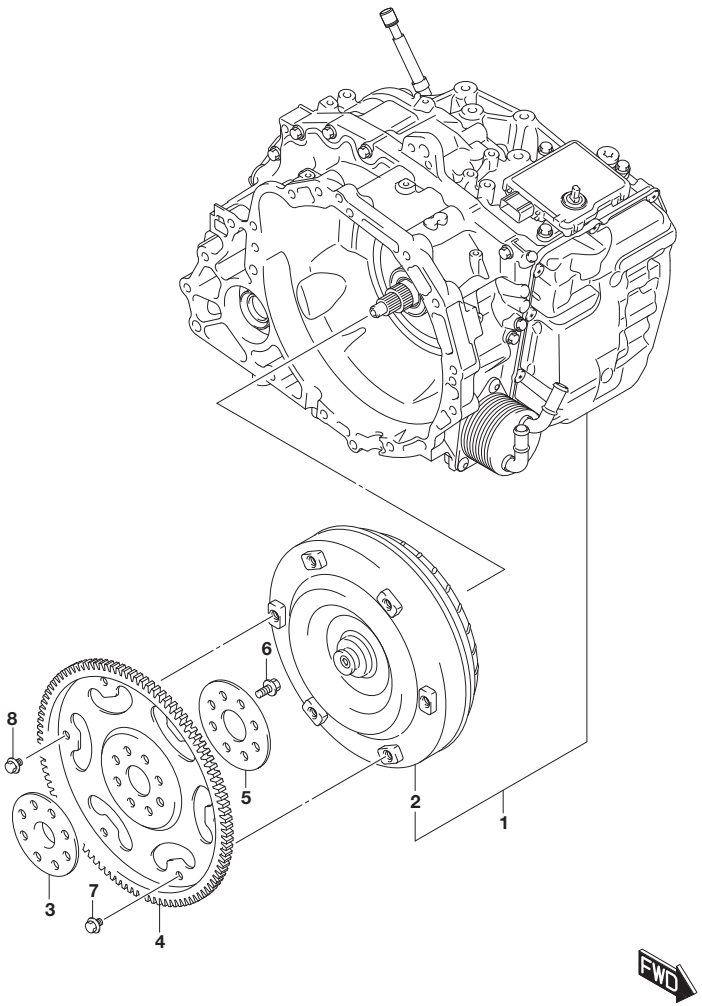

FIG.210B (1-K-2) AT TRANSMISSION ASSY (6AT:K14C)

REF NO.	PART NO.	DESCRIPTION	Q'TY	REMARKS
1-1	20019-53S11	TRANSMISSION ASSY, AUTOMATIC	1	2WD
1-2	20019-53SH1	TRANSMISSION ASSY, AUTOMATIC	1	4WD
2	22710-68M11	.CONVERTER, TORQUE	1	
3	22611-68M10	FLANGE, T/C DRIVE PLATE	1	
4	22620-68M10	PLATE, T/C DRIVE	1	
5	22631-68M10	PLATE, T/C DRIVE REAR	1	
6	09103-10440	BOLT (10X18.5)	8	
7	09103-08516	BOLT (8X9.5)	5	
8	09103-08517	BOLT (8X9.5)	1	

FIG.214A

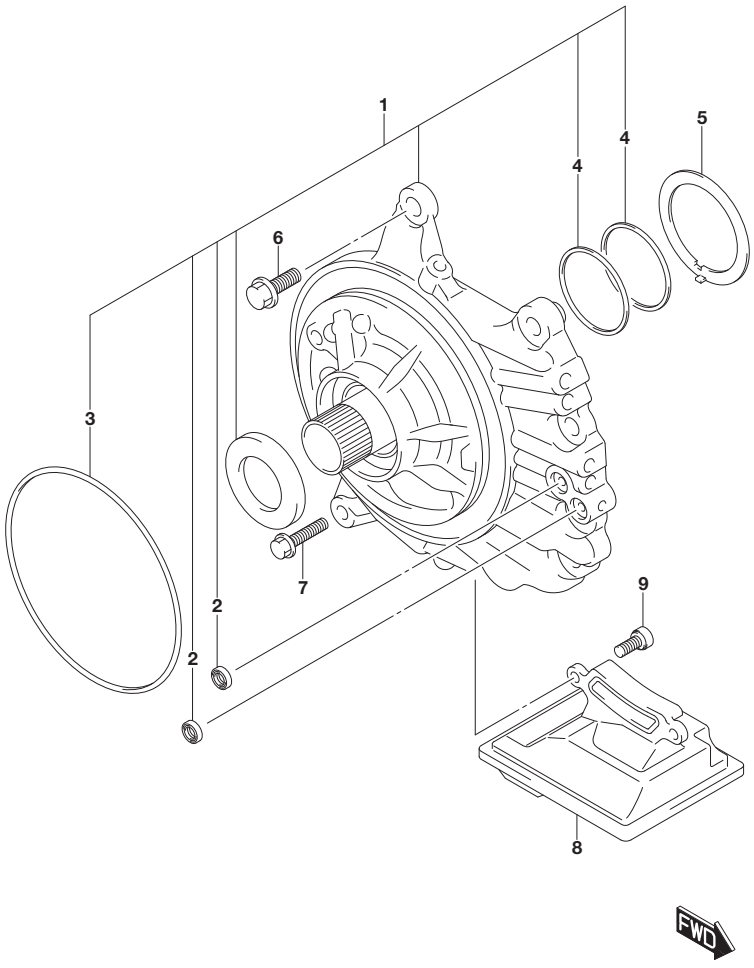

FIG.214A (1-K-3) AT OIL PUMP (6AT)

REF NO.	PART NO.	DESCRIPTION	Q'TY	REMARKS
1	22800-78MT0	PUMP SET, OIL	1	
2	22861-78M10	.GASKET, TRANSAXLE CASE	2	
3	22883-79C10	.O RING, OIL PUMP	1	
4	22831-78M10	.RING, CLUTCH DRUM OIL SEAL	2	
5	22858-78M10	WASHER, OIL PUMP THR	1	
6	22893-78M10	BOLT, OIL PUMP ASSY NO.1	5	
7	22894-78M10	BOLT, OIL PUMP ASSY NO.2	2	
8	26445-78M10	STRAINER ASSY, OIL	1	
9	26449-78M10	BOLT, OIL STRAINER ASSY	2	

FIG.216A

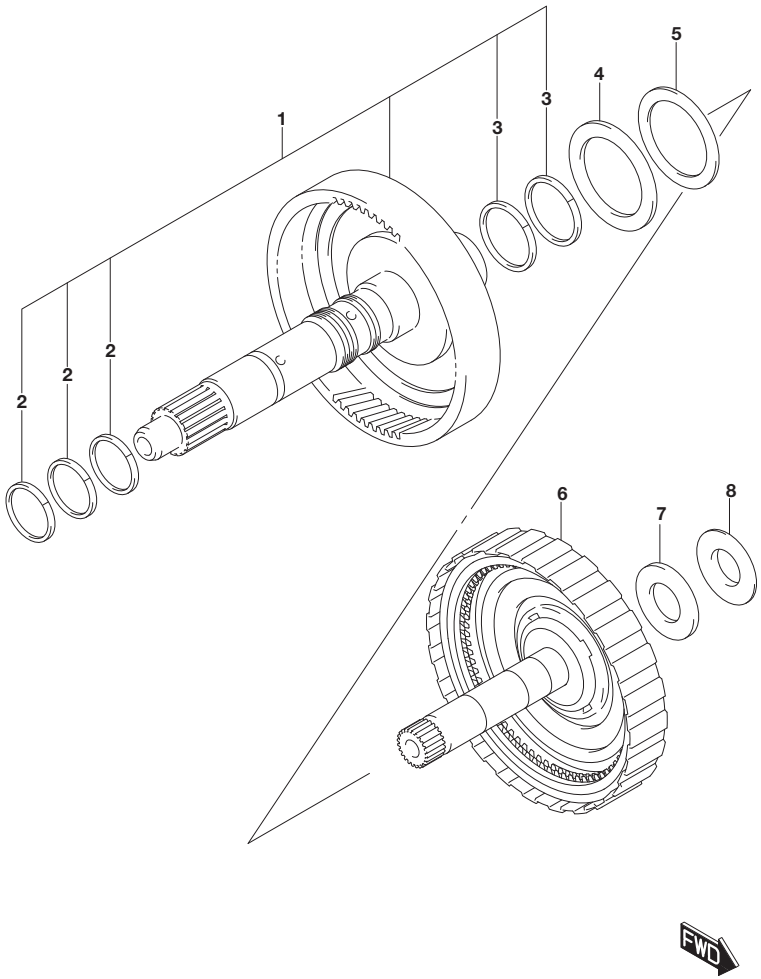

FIG.216A (1-K-4) AT INPUT SHAFT (6AT)

REF NO.	PART NO.	DESCRIPTION	Q'TY	REMARKS
1	24100-78MT0	SHAFT SET, INPUT	1	
2	24191-78M10	.RING, INPUT SHAFT OIL SEAL NO.1	3	
3	24192-78M10	.RING, INPUT SHAFT OIL SEAL NO.2	2	
4-1	24122-78M10	BEARING, INPUT SHAFT THR	1	K10C
4-2	24122-68M10	BEARING, INPUT SHAFT THR	1	K14C
5	24123-78M10	RACE, INPUT SHAFT THR BEARING	1	
6-1	26700-78M10	CLUTCH ASSY, DIRECT	1	K10C
6-2	26700-68M10	CLUTCH ASSY, DIRECT	1	K14C
7	26711-78M10	BEARING, DIRECT CLUTCH ASSY THR	1	
8	26722-78M10	RACE, DIR CLUTCH ASSY THR BRG	1	

FIG.220A

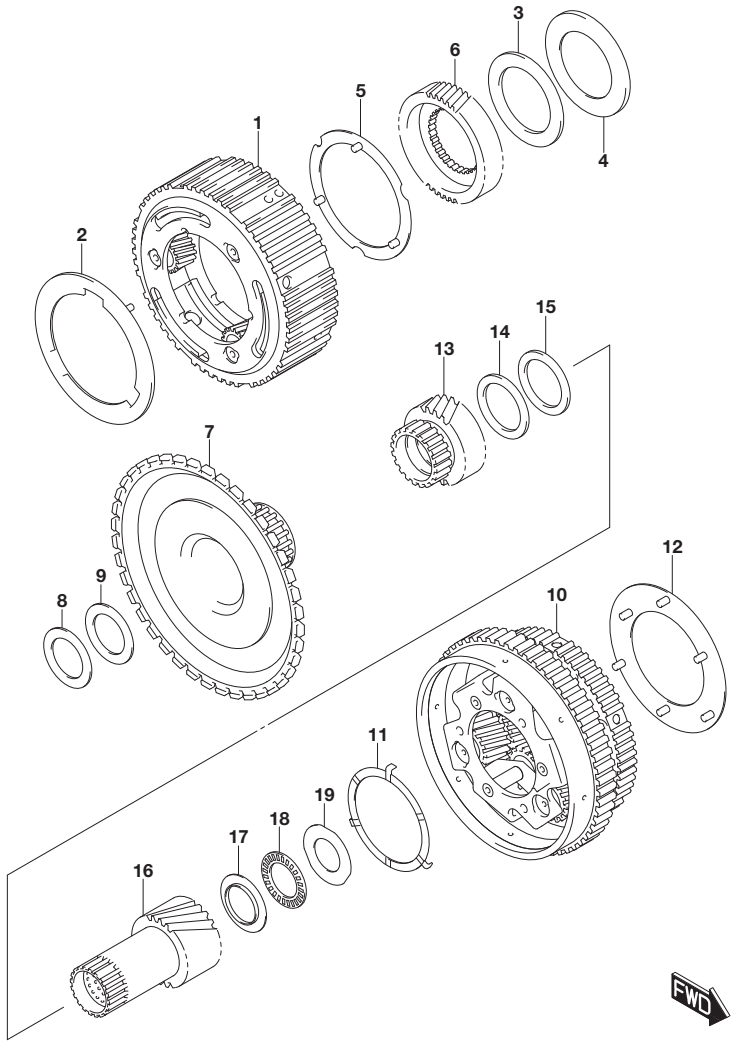

FIG.220A (1-K-5) AT PLANETARY GEAR (6AT:K10C)

REF NO.	PART NO.	DESCRIPTION	Q'TY	REMARKS
1	24910-78M10	GEAR ASSY, FR PLNTY	1	
2	24911-78M10	WASHER, FR PLNTY CARRIER NO.1	1	
3	24912-78M10	BEARING, FR PLNTY CARRIER THR	1	
4	24913-78M10	RACE, FR PLNTY CARRIER THR BRG	1	
5	24914-78M10	WASHER, FR PLNTY CARRIER NO.2	1	
6	24931-78M10	GEAR, FR PLNTY SUN	1	
7	24932-78M10	DRUM, SUN GEAR INPUT	1	
8	24933-78M10	BEARING, SUN GEAR INP DRUM THR	1	
9	24934-78M10	RACE, SUN GEAR INP DRUM THR BRG	1	
10	24940-78M10	GEAR ASSY, RR PLNTY	1	
11	24941-78M10	WASHER, RR PLNTY CARRIER NO.1	1	
12	24942-78M10	WASHER, RR PLNTY CARRIER NO.2	1	
13	24951-78M10	GEAR, RR PLNTY SUN NO.1	1	
14	24952-78M10	BEARING, RR PLNTY SUN NO.1 THR	1	
15	24953-78M10	RACE, RR PLNTY SUN NO.1 THR BRG	1	
16	24954-78M10	GEAR, RR PLNTY SUN NO.2	1	
17	24955-78M10	RACE, RR PLNTY SUN NO.2 BRG NO.1	1	
18	24956-78M10	BEARING, RR PLNTY SUN NO.2 THR	1	
19	24957-78M10	RACE, RR PLNTY SUN NO.2 BRG NO.2	1	

FIG.220B

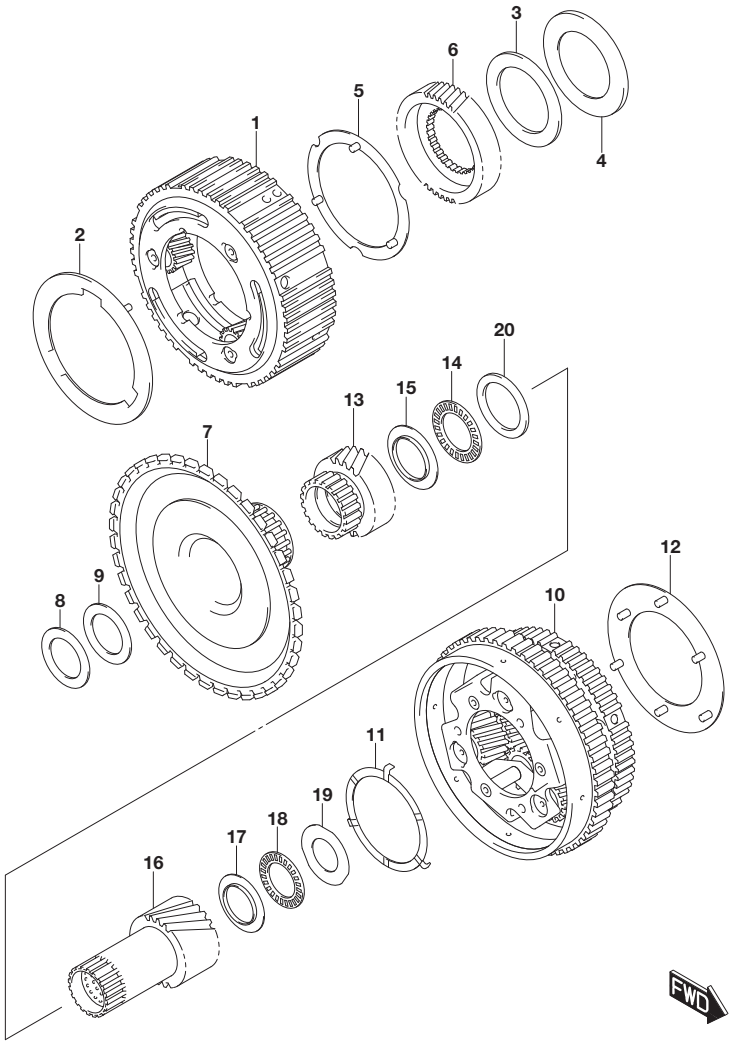

FIG.220B (1-K-6) AT PLANETARY GEAR (6AT:K14C)

REF NO.	PART NO.	DESCRIPTION	Q'TY	REMARKS
1	24910-68M10	GEAR ASSY, FR PLNTY	1	
2	24911-78M10	WASHER, FR PLNTY CARRIER NO.1	1	
3	24912-68M10	BEARING, FR PLNTY CARRIER THR	1	
4	24913-68M10	RACE, FR PLNTY CARRIER THR BRG	1	
5	24914-78M10	WASHER, FR PLNTY CARRIER NO.2	1	
6	24931-78M10	GEAR, FR PLNTY SUN	1	
7	24932-78M10	DRUM, SUN GEAR INPUT	1	
8	24933-68M10	BEARING, SUN GEAR INP DRUM THR	1	
9	24934-68M10	RACE, SUN GEAR INP DRUM THR BRG	1	
10	24940-68M10	GEAR ASSY, RR PLNTY	1	
11	24941-68M10	WASHER, RR PLNTY CARRIER NO.1	1	
12	24942-68M10	WASHER, RR PLNTY CARRIER NO.2	1	
13	24951-68M10	GEAR, RR PLNTY SUN NO.1	1	
14	24952-68M10	BEARING, RR PLNTY SUN NO.1 THR	1	
15	24953-68M10	RACE, RR PLNTY SUN NO.1	1	
16	24954-68M10	GEAR, RR PLNTY SUN NO.2	1	
17	24955-68M10	RACE, RR PLNTY SUN NO.2 BRG NO.1	1	
18	24956-68M10	BEARING, RR PLNTY SUN NO.2 THR	1	
19	24957-68M10	RACE, RR PLNTY SUN NO.2 BRG NO.2	1	
20	24958-68M10	RACE, RH PLNTY SUN NO.1 BRG NO.2	1	

FIG.226A

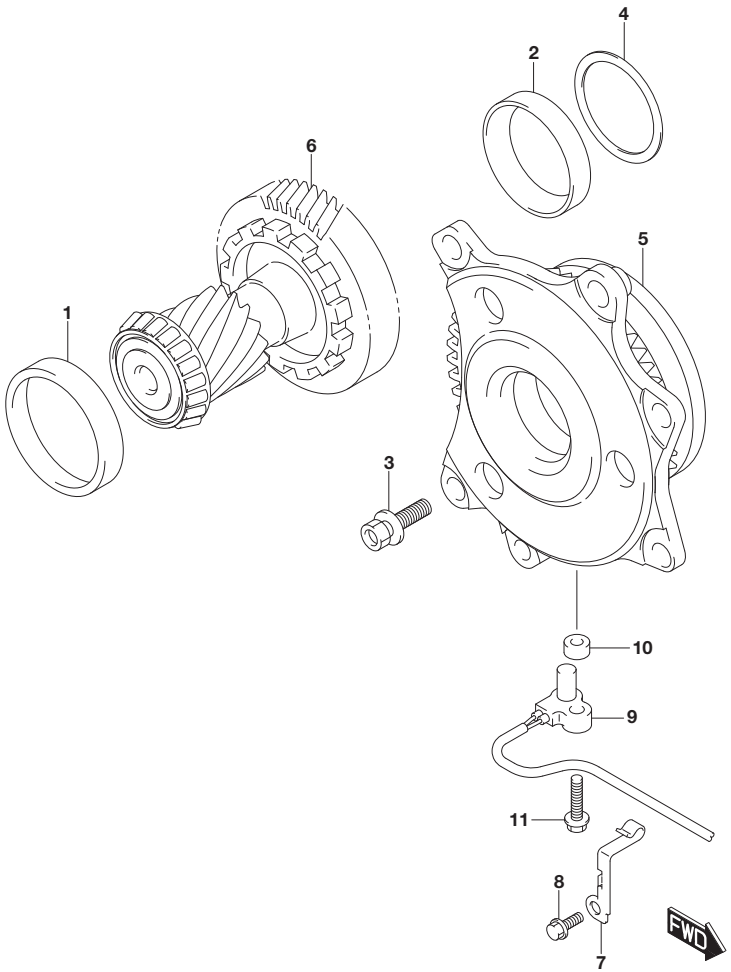

FIG.226A (1-K-7) AT REDUCTION GEAR (6AT:K10C)

REF NO.	PART NO.	DESCRIPTION	Q'TY	REMARKS
1	24142-78M10	RACE, BEARING OUTER NO.1	1	
2	24143-78M10	RACE, BEARING OUTER NO.2	1	
3	24144-78M10	BOLT, COUNTER DRIVE GEAR	6	
4	24147-78MT0	SHIM SET, COUNTERSHAFT BRG	1	
5	24611-76R10	GEAR, COUNTER DRIVE	1	
6	24631-65M70	GEAR ASSY, PNN & CNTR DRIVEN	1	
7	24727-78M10	CLAMP, WIRING	1	
8	25991-60G10	BOLT	1	
9	26132-78M10	SENSOR, SPEED OUTPUT	1	
10	26142-54P10	SPACER, SPEED OUTPUT SENSOR	1	
11	29971-57B00	BOLT	1	

FIG.226B

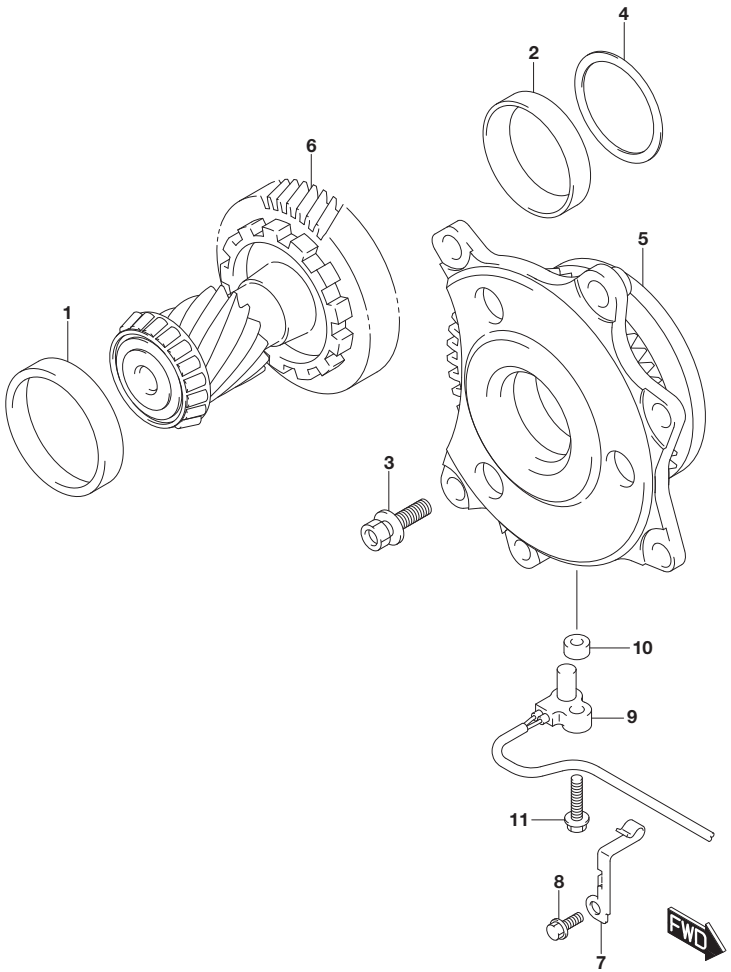

FIG.226B (1-K-8) AT REDUCTION GEAR (6AT:K14C)

REF NO.	PART NO.	DESCRIPTION	Q'TY	REMARKS
1	24142-68M10	RACE, BEARING OUTER NO.1	1	
2	24143-68M10	RACE, BEARING OUTER NO.2	1	
3	24144-78M10	BOLT, COUNTER DRIVE GEAR	6	
4	24147-78MT0	SHIM SET, COUNTERSHAFT BRG	1	
5	24611-68M10	GEAR, COUNTER DRIVE	1	
6	24631-68M10	GEAR ASSY, PNN & CNTR DRIVEN	1	
7	24727-78M10	CLAMP, WIRING	1	
8	25991-60G10	BOLT	1	
9	26132-78M10	SENSOR, SPEED OUTPUT	1	
10	26142-54P10	SPACER, SPEED OUTPUT SENSOR	1	
11	29971-57B00	BOLT	1	

FIG.228A

FIG.228A (1-K-9) AT FORWARD CLUTCH (6AT)

REF NO.	PART NO.	DESCRIPTION	Q'TY	REMARKS
1-1	24200-50R10	CLUTCH ASSY, FORWARD	1	K10C
1-2	24200-68M10	CLUTCH ASSY, FORWARD	1	K14C

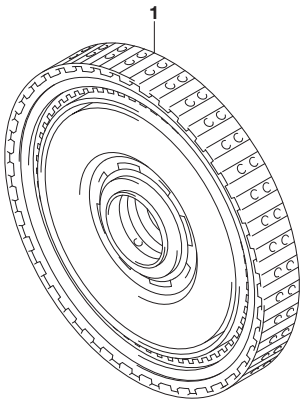

APK414-3 P22 228A
AT FORWARD CLUTCH

FIG.230A

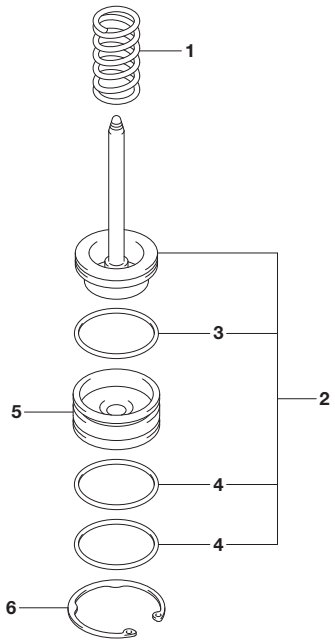

FIG.230A (1-K-10) AT 2ND BRAKE (6AT)

REF NO.	PART NO.	DESCRIPTION	Q'TY	REMARKS
1	26732-78M10	SPRING, B1 BRAKE PISTON	1	
2	26731-78MT0	PISTON SET, B-1 BRAKE	1	
3	26733-78M10	.O RING, B-1 BRAKE PISTON	1	
4	26733-78M10	.O RING, B-1 BRAKE PISTON	2	
5	26751-78M10	COVER, BRAKE PISTON	1	
6	26752-78M10	RING, BRAKE PISTON COVER SNAP	1	

FIG.234A

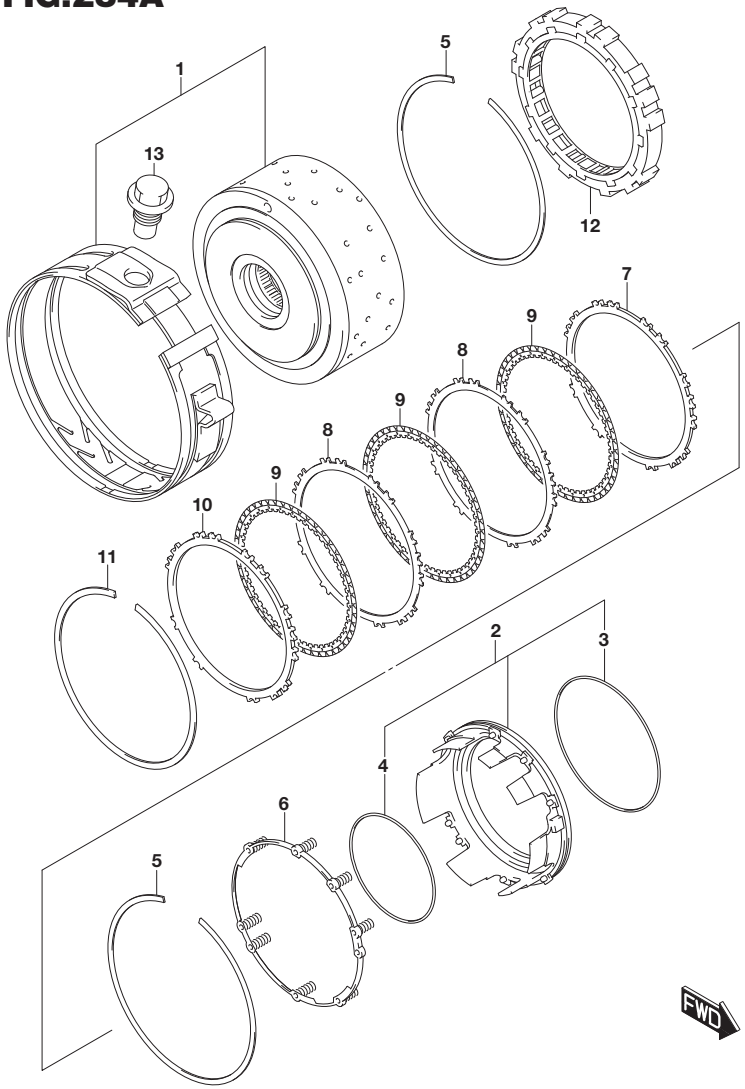

FIG.234A (1-K-11) AT 1ST/REVERSE BRAKE (6AT:K10C)

REF NO.	PART NO.	DESCRIPTION	Q'TY	REMARKS
1	26800-68M10	CLUTCH ASSY, REVERSE	1	
2	26826-78MT0	PISTON SET, 1ST & REVERSE BRAKE	1	
3	26812-78M10	.O RING, PISTON OUTER	1	
4	26813-78M10	.O RING, PISTON INNER	1	
5	26814-78M10	RING, 1ST & REV BK SNAP NO.2	2	
6	26815-78M10	SPRING, 1ST & REV BK RTN	1	
7	26821-78M10	FLANGE, 1ST & REV BK NO.2	1	
8	26822-78M10	PLATE, 1ST & REV BK	2	
9	26823-78M10	DISC, 1ST & REV BK	3	
10	26824-78MT0	FLANGE SET, 1ST & REV	1	
11	26825-78M10	RING, 1ST & REV BK SNAP NO.1	1	
12	26851-78M10	CLUTCH ASSY, ONE WAY	1	
13	26771-78M10	BOLT, BRAKE BAND ANCHOR	1	

APK414-3 P22 234A
AT 1ST/REVERSE BRAKE (1)

FIG.234B

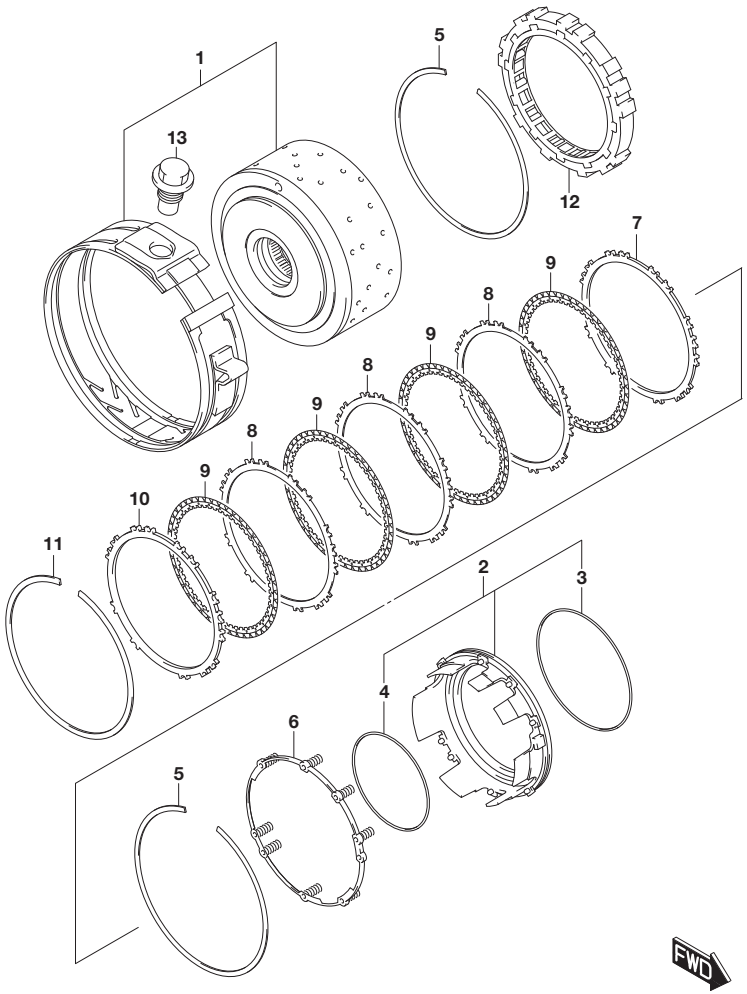

FIG.234B (1-K-12) AT 1ST/REVERSE BRAKE (6AT:K14C)

REF NO.	PART NO.	DESCRIPTION	Q'TY	REMARKS
1	26800-68M10	CLUTCH ASSY, REVERSE	1	
2	26826-68MT0	PISTON SET, 1ST & REVERSE	1	
3	26812-78M10	.O RING, PISTON OUTER	1	
4	26813-78M10	.O RING, PISTON INNER	1	
5	26814-78M10	RING, 1ST & REV BK SNAP NO.2	2	
6	26815-78M10	SPRING, 1ST & REV BK RTN	1	
7	26821-78M10	FLANGE, 1ST & REV BK NO.2	1	
8	26822-78M10	PLATE, 1ST & REV BK	3	
9	26823-78M10	DISC, 1ST & REV BK	4	
10	26824-78MT0	FLANGE SET, 1ST & REV	1	
11	26825-78M10	RING, 1ST & REV BK SNAP NO.1	1	
12	26851-68M10	CLUTCH ASSY, ONE WAY	1	
13	26771-78M10	BOLT, BRAKE BAND ANCHOR	1	

FIG.240A

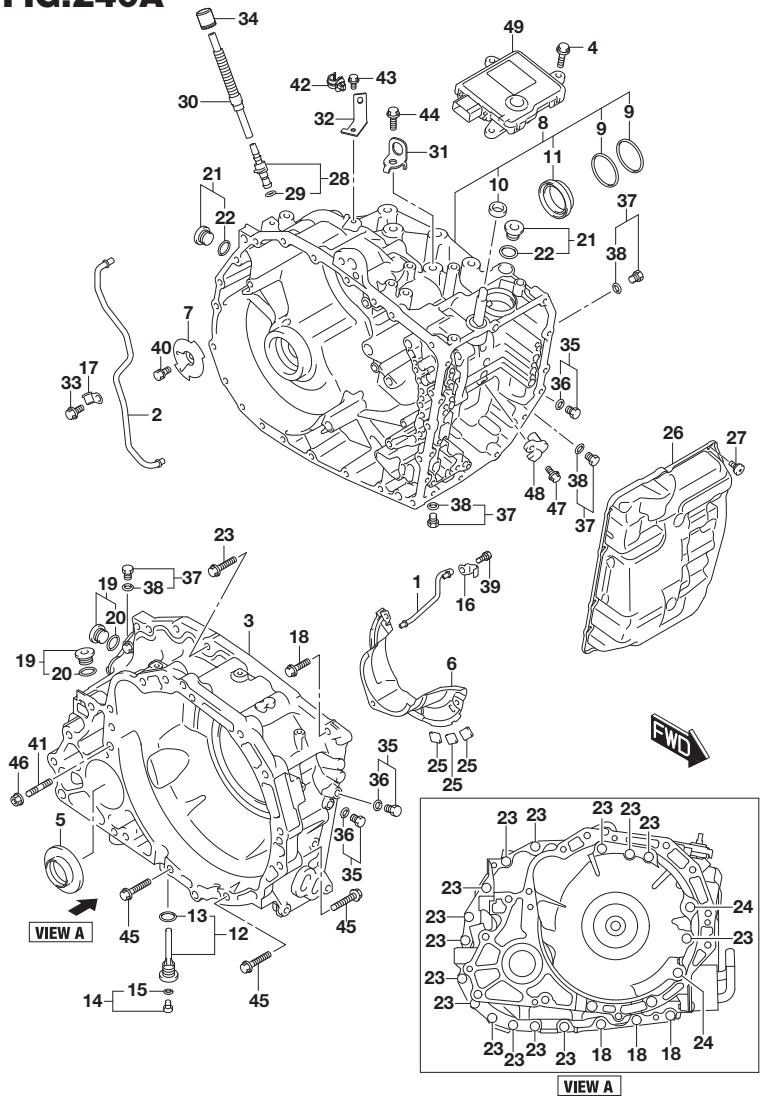

FIG.240A (1-K-13) AT TRANSMISSION CASE (6AT)

REF NO.	PART NO.	DESCRIPTION	Q'TY	REMARKS
1	24700-78M10	TUBE, DIFF GEAR LUB APPLY	1	
2	24701-78M10	TUBE, TRANSAXLE LUB APPLY	1	
3	24710-68M10	HOUSING, TORQUE CONVERTER	1	
4	22893-79C10	BOLT	3	
5-1	27611-78M10	OIL SEAL, DIFF SIDE RH	1	2WD
5-2	27611-54P10	OIL SEAL, DIFF SIDE RH	1	4WD
6	24711-78M10	PLATE, OIL RESERVOIR LOCK	1	
7	24712-78M10	PLATE, TRANSMISSION CASE	1	
8	24720-78MT0	CASE SET, TRANSAXLE	1	
9	24715-78M10	.RING, CLUTCH DRUM OIL SEAL	2	
10	25981-60G10	.SEAL, MANUAL SHIFT SHAFT	1	
11	27612-78M10	.OIL SEAL, DIFF SIDE LH	1	
12	24721-78MT0	PLUG SET, DRAIN NO.1	1	
13	29726-57B00	.O RING, SOL WIRE HARN	1	
14	24722-78MT0	PLUG SET, DRAIN NO.2	1	
15	29738-57B00	.O RING, T/M CASE PLUG	1	
16	24725-59J10	CLAMP, DIFF BRG LUB PIPE	1	
17	24725-59J10	CLAMP, DIFF BRG LUB PIPE	1	
18	24725-79C10	BOLT, T/C HOUSING NO.1	4	
19	24726-59JT0	PLUG SET, NO.1	2	
20	24842-60G10	.O RING	2	
21	24726-59JT0	PLUG SET, NO.1	2	
22	24842-60G10	.O RING	2	
23	24729-60G10	BOLT	16	
24	24729-60G10	BOLT	2	
25	24745-59J00	MAGNET, OIL CLEANER	3	
26	24761-78M10	PAN, TRANSAXLE SIDE OIL	1	
27	24752-59J10	BOLT, SIDE COVER	13	
28	24776-78MT0	PLUG SET, BREATHER	1	
29	24774-78M10	.O RING, BREATHER PLUG	1	
30	24775-78M10	HOSE, BREATHER	1	
31	24855-54P10	HOOK, TRANSMISSION	1	
32	24860-54P10	BRACKET, BREATHER HOSE	1	
33	25991-60G10	BOLT	1	
34	27991-77M10	PLUG, BREATHER HOSE	1	
35	29849-57BT0	PLUG SET, NO.2	3	

FIG.240A

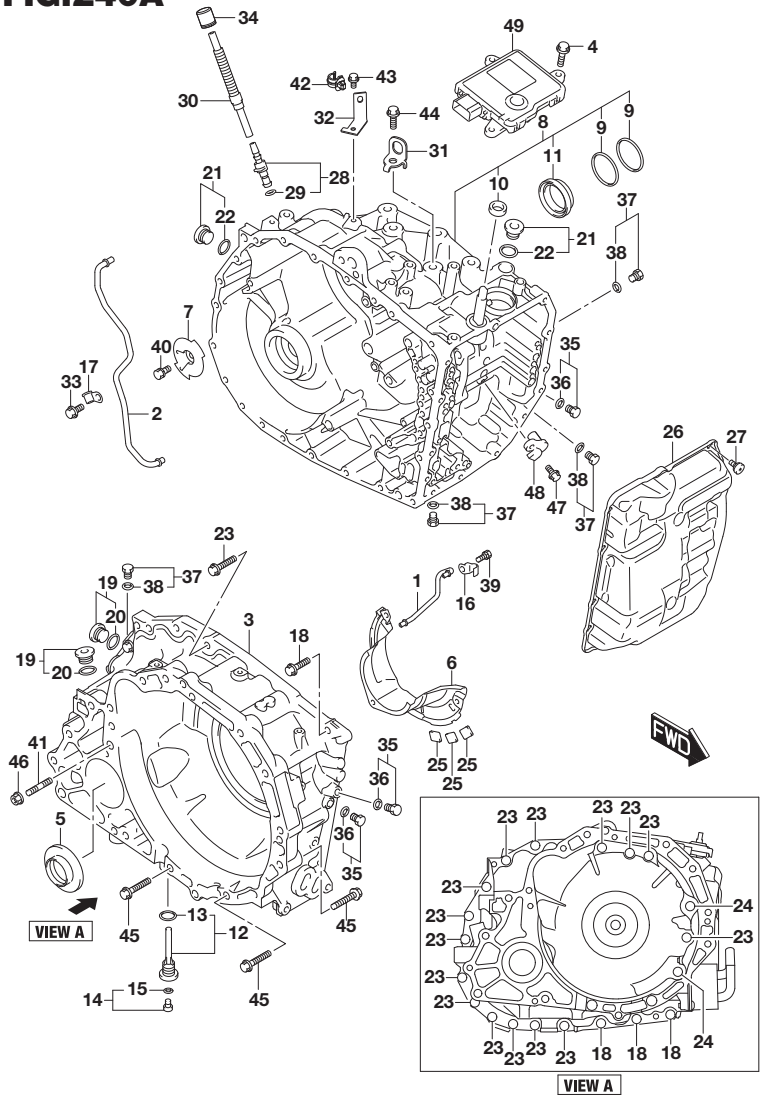

FIG.240A (1-K-14) AT TRANSMISSION CASE (6AT)

REF NO.	PART NO.	DESCRIPTION	Q'TY	REMARKS
36	29738-57B00	.O RING, T/M CASE PLUG	3	
37	29849-57BT0	PLUG SET, NO.2	4	
38	29738-57B00	.O RING, T/M CASE PLUG	4	
39	29970-57B00	BOLT, SOL WIRE HARN CLAMP	3	
40	29970-57B00	BOLT, SOL WIRE HARN CLAMP	1	
41	01421-1045A	STUD BOLT	1	
42	09403-11320	CLAMP	1	
43	01550-0612C	BOLT	1	
44	01550-1020C	BOLT	1	
45	01550-1050A	BOLT	7	
46	08316-1010A	NUT	1	
47	25991-60G10	BOLT	1	
48	26131-78M10	SENSOR, SPEED INPUT	1	
49	3E110-86R10	BASE ASSY, AT CONTROLLER	1	

FIG.244A

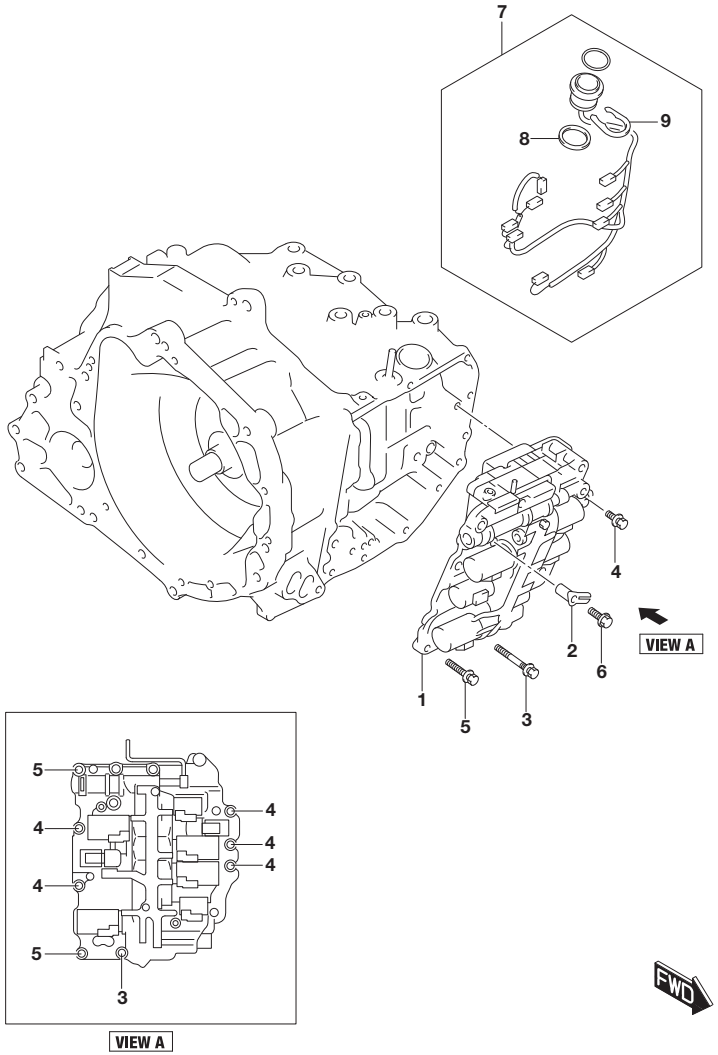

FIG.244A (1-L-2) AT VALVE (6AT)

REF NO.	PART NO.	DESCRIPTION	Q'TY	REMARKS
1	26500-54P10	BODY ASSY, T/M VALVE	1	
2	26512-78M10	CLAMP, TEMPERATURE SENSOR	1	
3	26586-73KR0	BOLT, T/M VALVE BODY ASSY NO.1	1	
4	26587-78M10	BOLT, T/M VALVE BODY ASSY NO.2	5	
5	26588-78M10	BOLT, T/M VALVE BODY ASSY NO.3	2	
6	29982-57B00	BOLT	1	
7	24772-54PT0	HARNESS SET, TRANSMISSION WIRE	1	
8	24771-78M10	.GASKET, TRANSAXLE CASE	1	
9	24772-78M10	.PLATE, T/M WIRE HARN LOCK	1	

APK414-3 P22 244A
AT VALVE

FIG.246A

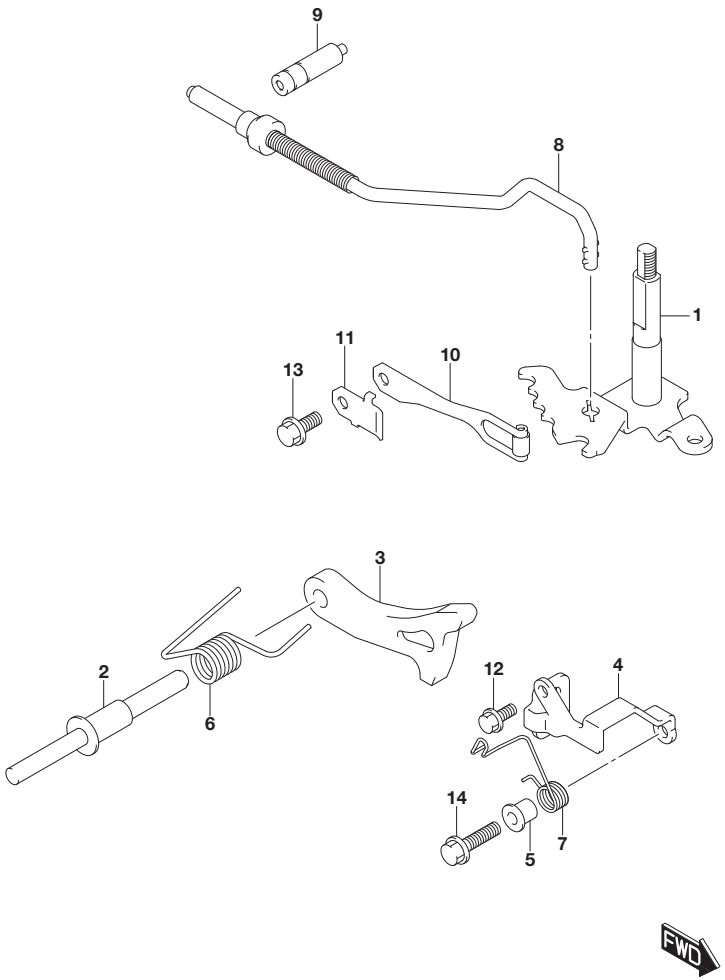

FIG.246A (1-L-3) AT PARKING LOCK (6AT)

REF NO.	PART NO.	DESCRIPTION	Q'TY	REMARKS
1	25910-78M10	LEVER, MANUAL VALVE	1	
2	25911-78M10	SHAFT, PARKING LOCK PAWL	1	
3	25912-78M10	PAWL, PARKING LOCK	1	
4	25914-78M10	BRACKET, PARKING LOCK PAWL	1	
5	25915-78M10	SLEEVE, SPRING GUIDE	1	
6	25918-78M10	SPRING, PARKING LOCK PAWL	1	
7	25919-78M10	SPRING, PARKING GUIDE	1	
8	25920-78M10	ROD, PARKING LOCK	1	
9	25925-59J10	PIN, PARKING LOCK	1	
10	25961-78M10	SPRING, MANUAL DETENT	1	
11	25962-78M10	COVER, MANUAL DETENT SPR	1	
12	25991-60G10	BOLT	1	
13	25991-60G10	BOLT	1	
14	29985-57B00	BOLT	1	

FIG.248A

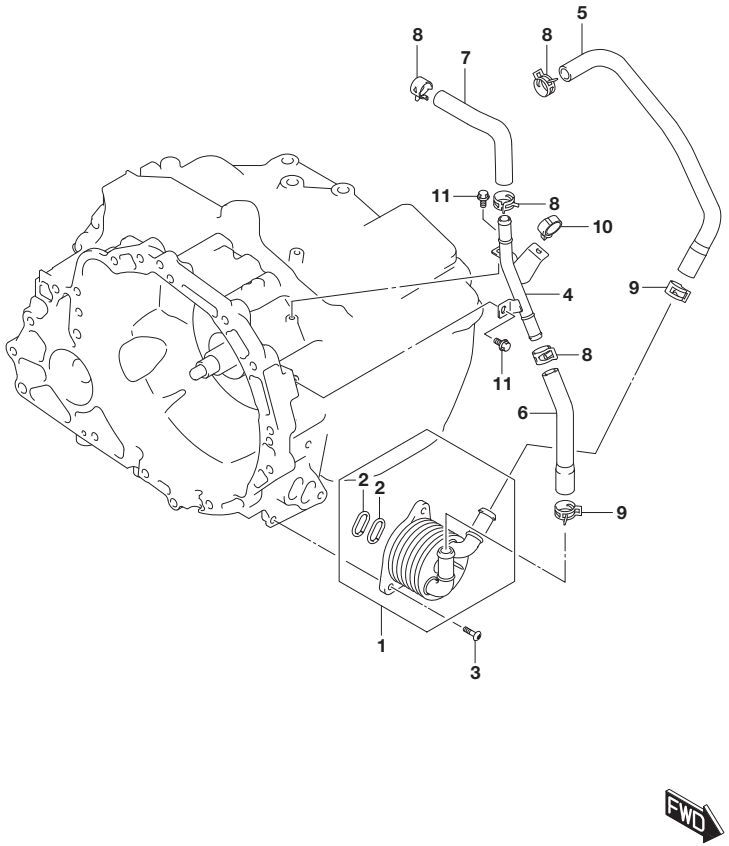

FIG.248A (1-L-4) AT OIL HOSE (6AT:K10C)

REF NO.	PART NO.	DESCRIPTION	Q'TY	REMARKS
1	24777-78MT0	COOLER SET, OIL	1	
2	24779-78M10	.O RING, OIL COOLER ASSY	2	
3	24778-78M10	SCREW, OIL COOLER ASSY	3	
4	22911-64R10	PIPE, OIL COOLER	1	
5	22931-64R10	HOSE, OIL COOLER NO.1	1	
6	22932-64R10	HOSE, OIL COOLER NO.2	1	
7	22933-64R10	HOSE, OIL COOLER NO.3	1	
8	09401-18403	CLIP (ID:17.8)	4	
9	09401-20407	CLIP	2	
10	09403-20307	CLAMP	1	
11	01550-0612A	BOLT	2	

FIG.248B

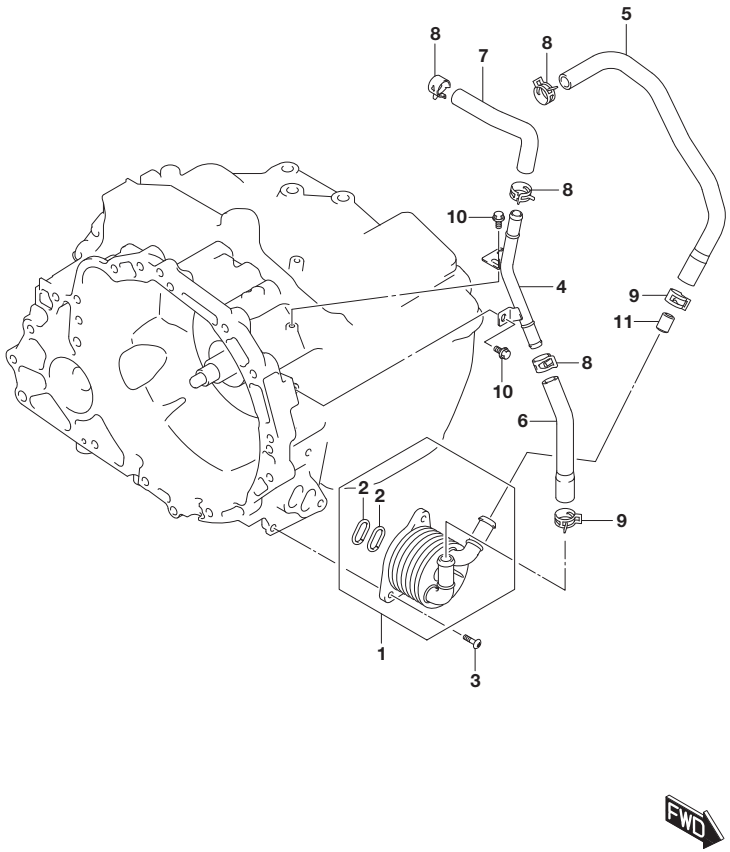

FIG.248B (1-L-5) AT OIL HOSE (6AT:K14C)

REF NO.	PART NO.	DESCRIPTION	Q'TY	REMARKS
1	24777-78MT0	COOLER SET, OIL	1	
2	24779-78M10	.O RING, OIL COOLER ASSY	2	
3	24778-78M10	SCREW, OIL COOLER ASSY	3	
4	22911-60R10	PIPE, OIL COOLER	1	
5	22931-60R10	HOSE, OIL COOLER NO.1	1	
6	22932-60R10	HOSE, OIL COOLER NO.2	1	
7	22933-60R10	HOSE, OIL COOLER NO.3	1	
8	09401-18403	CLIP (ID:17.8)	4	
9	09401-20407	CLIP	2	
10	01550-0612A	BOLT	2	
11	74129-76G00	SPACER, HEATER HOSE	1	

FIG.260A

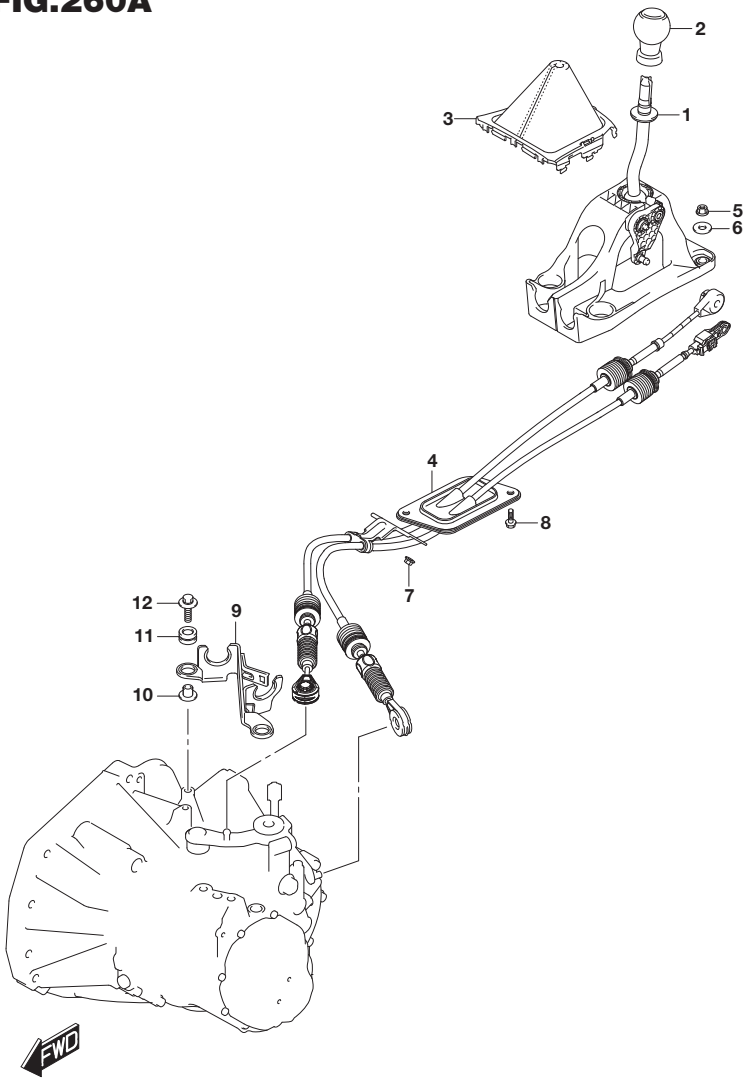

FIG.260A (1-L-6) GEAR SHIFT CONTROL (5MT)

REF NO.	PART NO.	DESCRIPTION	Q'TY	REMARKS
1	28100-61M20	LEVER ASSY, GEAR SHF CONT	1	
2	28113-54P21-C48	KNOB, GEAR SHIFT CONT LEVER (CHROME/BLACK)	1	
3	28130-61M40-5PK	BOOT, SHIFT LEVER (BLACK)	1	
4	28300-61M00	CABLE ASSY, SHIFT & SELECT CONT	1	
5	08316-1008A	NUT	4	
6	09160-08151	WASHER (8.5X26X1.6)	4	
7	08316-1006A	NUT	2	
8	02162-0620C	SCREW	2	
9	28391-61M00	BRACKET, CONT CABLE	1	
10	28392-68L00	SPACER, T/M CONT CABLE BRACKET	3	
11	28393-68L00	CUSHION, T/M CONT CABLE BRACKET	3	
12	09118-08167	BOLT (8X30)	3	

FIG.260B

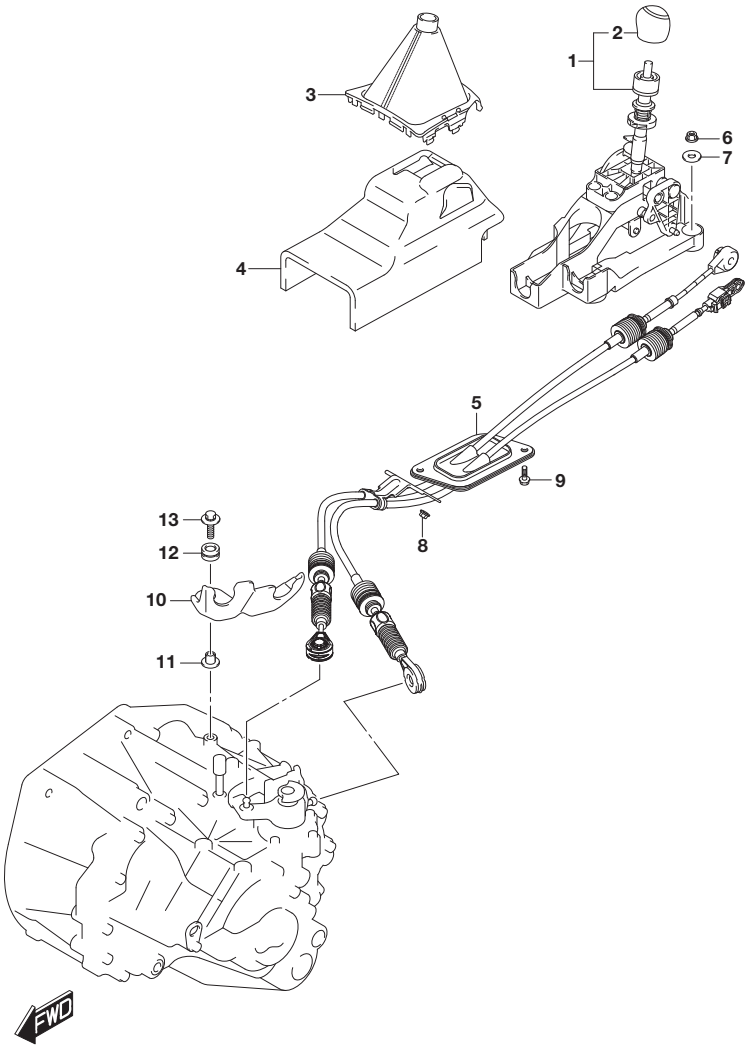

FIG.260B (1-L-7) GEAR SHIFT CONTROL (6MT)

REF NO.	PART NO.	DESCRIPTION	Q'TY	REMARKS
1	28100-62M03-HTV	LEVER ASSY, GEAR SHF CONT (BLACK/CHROME)	1	
2	28113-62M02-C48	.KNOB, GEAR SHIFT CONT LEVER (CHROME/BLACK)	1	
3	28130-62M20-5PK	BOOT, SHIFT LEVER (BLACK)	1	
4	28139-62M00	COVER, GR SHF LEVER	1	
5	28300-60R00	CABLE ASSY, SHIFT & SELECT CONT	1	
6	08316-1008A	NUT	4	
7	09160-08151	WASHER (8.5X26X1.6)	4	
8	08316-1006A	NUT	2	
9	02162-0620C	SCREW	2	
10	28391-60R00	BRACKET, T/M CONT CABLE	1	
11	28392-68L00	SPACER, T/M CONT CABLE BRACKET	3	
12	28393-68L00	CUSHION, T/M CONT CABLE BRACKET	3	
13	09118-08167	BOLT (8X30)	3	

FIG.260C

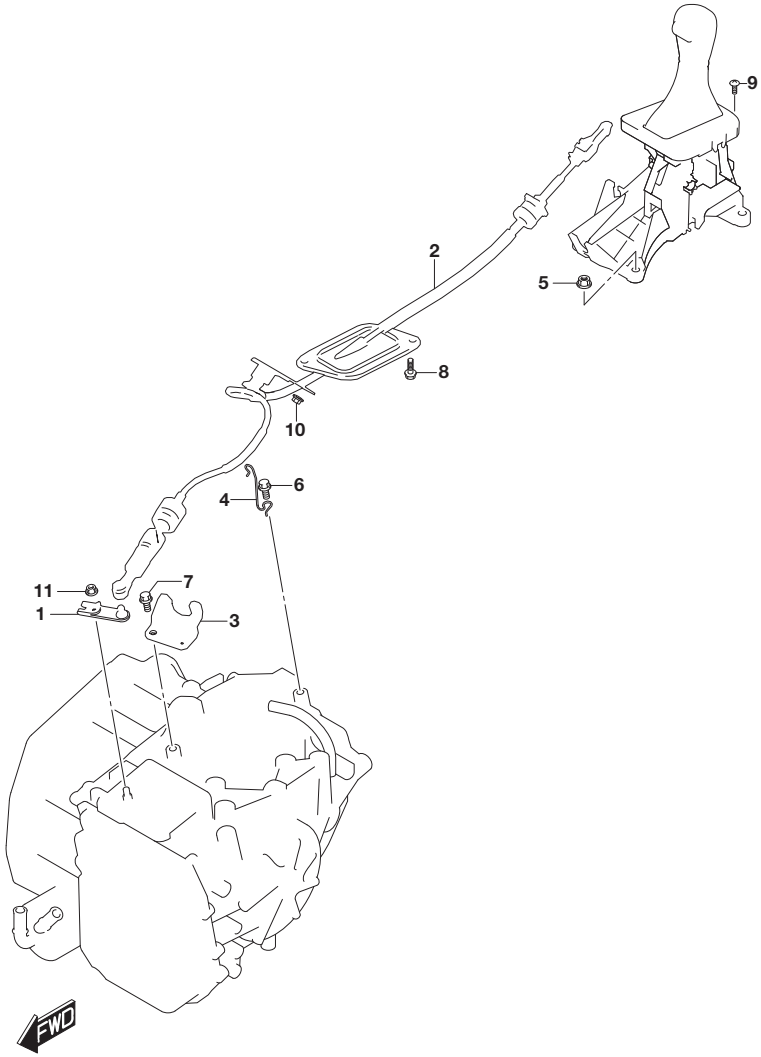

FIG.260C (1-L-8) GEAR SHIFT CONTROL (6AT)

REF NO.	PART NO.	DESCRIPTION	Q'TY	REMARKS
1	25970-54P10	LEVER, MANUAL SELECT	1	
2	28210-54P10	CABLE ASSY, SELECT	1	
3	28221-54P10	BRACKET, SELECT CABLE	1	
4-1	28225-54P10	CLAMP, SELECT CABLE	1	K10C
4-2	28225-60R10	CLAMP, SELECT CABLE	1	K14C
5	08316-1008A	NUT	4	
6	01550-0812C	BOLT	1	
7	01550-0816C	BOLT	2	
8	02162-0620C	SCREW	2	
9	03141-0512A	SCREW	1	
10	08316-1006A	NUT	2	
11	08361-3508A	NUT	1	

APK414-3 P22 260C
GEAR SHIFT CONTROL (3)

FIG.264A

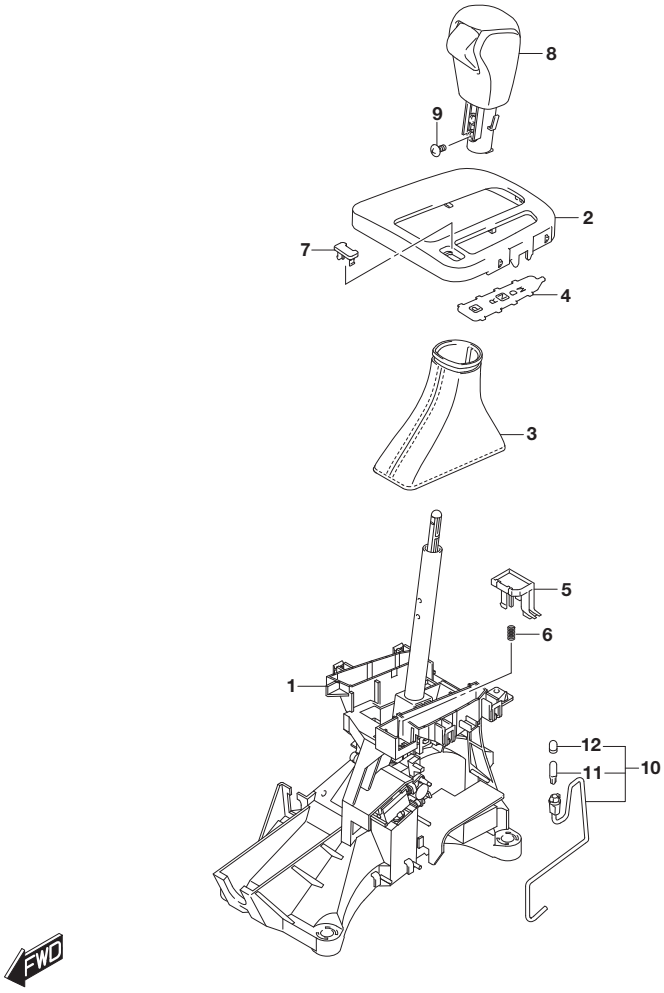

FIG.264A (1-L-9) SELECT LEVER (6AT:LHD)

REF NO.	PART NO.	DESCRIPTION	Q'TY	REMARKS
1-1	28110-54P50	LEVER, SELECT	1	GL
1-2	28110-54PJ0	LEVER, SELECT	1	GLX
2	28151-61M30-5PK	INDICATOR, SELECT LEVER (BLACK)	1	
3	28152-61M10-W9J	BOOT, SELECT LEVER (BLACK)	1	
4	28153-61M70	PLATE, SEL POSITION	1	
5	28156-61M30-5PK	BUTTON, SHIFT LOCK RELEASE (BLACK)	1	
6	28157-61M10	SPRING, SHF LOCK RELEASE	1	
7	28157-61M30-5PK	CAP, SHIFT LOCK RELEASE (BLACK)	1	
8	28160-61M51-GJL	KNOB ASSY, SELECT LEVER (BLACK/SILVER)	1	
9	28166-61M10	SCREW, KNOB	2	
10	28180-61M30	LAMP ASSY, ILLUM	1	
11	28181-61M10	.BULB	1	
12	28182-61M10	.FILTER	1	

FIG.264B

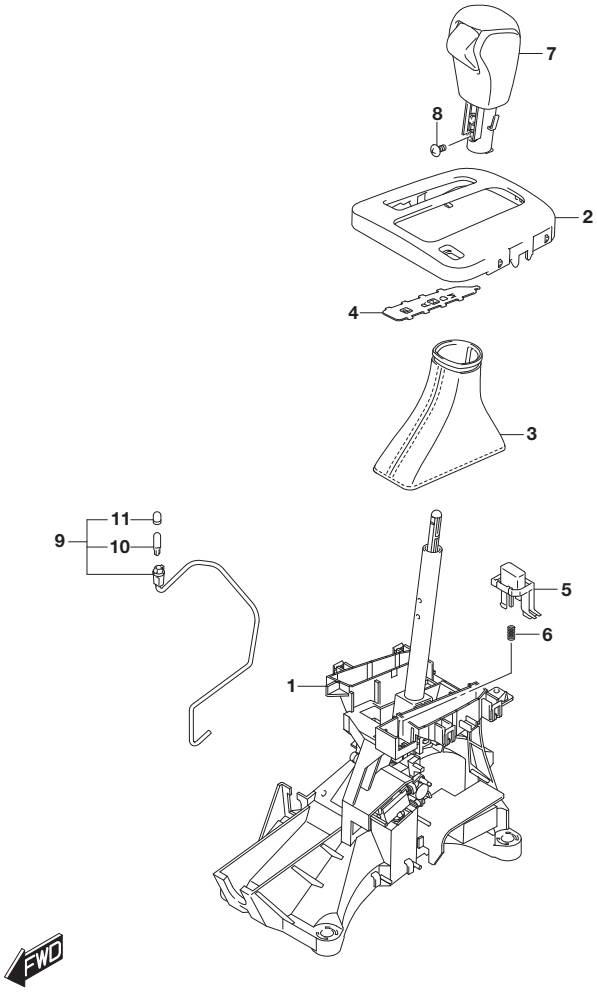

FIG.264B (1-L-10) SELECT LEVER (6AT:RHD)

REF NO.	PART NO.	DESCRIPTION	Q'TY	REMARKS
1-1	28110-54P50	LEVER, SELECT	1	GL
1-2	28110-54PJ0	LEVER, SELECT	1	GLX
2	28151-61M10-5PK	INDICATOR, SELECT LEVER (BLACK)	1	
3	28152-61M10-W9J	BOOT, SELECT LEVER (BLACK)	1	
4	28153-61M50	PLATE, SEL POSITION	1	
5	28156-61M10-5PK	BUTTON, SHIFT LOCK RELEASE (BLACK)	1	
6	28157-61M10	SPRING, SHF LOCK RELEASE	1	
7	28160-61M51-GJL	KNOB ASSY, SELECT LEVER (BLACK/SILVER)	1	
8	28166-61M10	SCREW, KNOB	2	
9	28180-61M10	LAMP ASSY, ILLUM	1	
10	28181-61M10	.BULB	1	
11	28182-61M10	.FILTER	1	

FIG.267A

FIG.267A (1-L-11) PROPELLER SHAFT (4WD)

REF NO.	PART NO.	DESCRIPTION	Q'TY	REMARKS
1	27100-54P00	SHAFT ASSY, PROPELLER	1	
2	09117-08079	BOLT (8X20)	8	
3	08316-1010A	NUT	2	

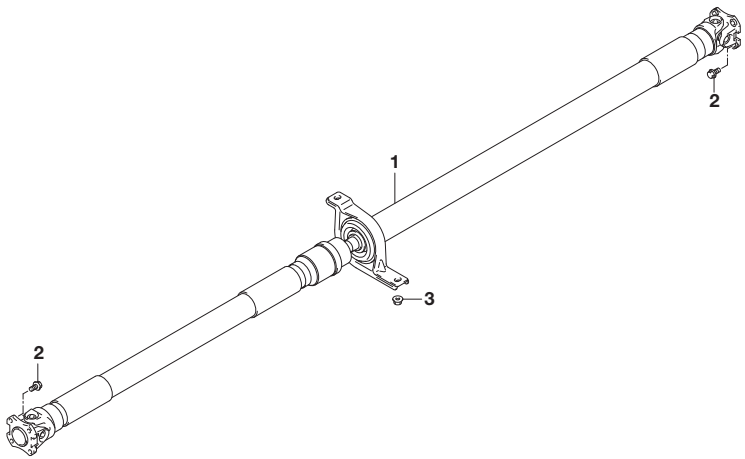

APK414-3 P22 267A
PROPELLER SHAFT

FIG.272A

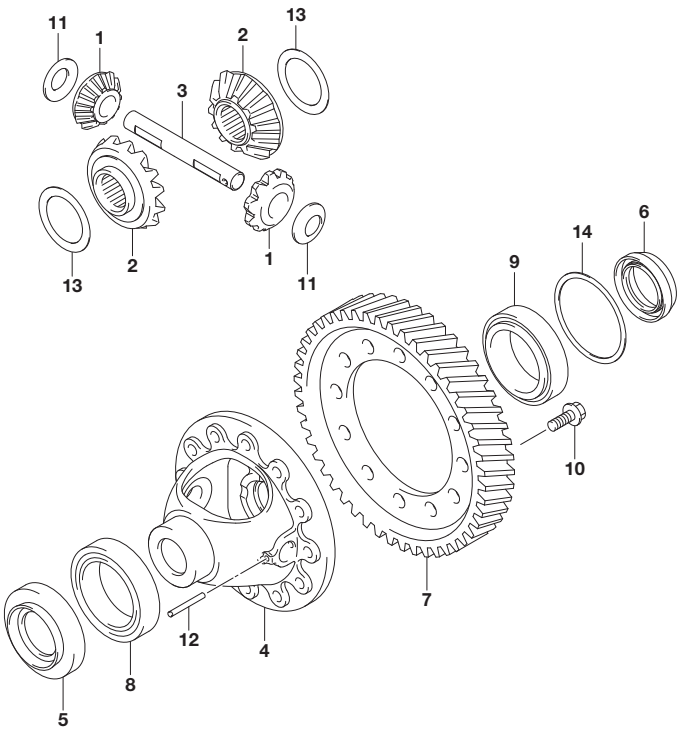

FIG.272A (1-L-12) FRONT DIFFERENTIAL GEAR (5MT:2WD)

REF NO.	PART NO.	DESCRIPTION	Q'TY	REMARKS
1	27331-61MA0	PINION, DIFFERENTIAL	2	
2	27341-61MA0	GEAR, DIFFERENTIAL SIDE	2	
3	27351-80J00	SHAFT, DIFF SIDE PINION	1	
4	27411-54L00	CASE, FR DIFF	1	
5	27431-57LA0	OIL SEAL, DIFF SIDE RH	1	
6	27432-54LA0	OIL SEAL, DIFF SIDE LH	1	
7	27511-64R00	GEAR, FINAL	1	
8	27521-79JA0	BEARING ASSY, DIFF SIDE RH	1	
9	27524-79JA0	BEARING ASSY, DIFF SIDE LH	1	
10	09103-10189	BOLT (10X23)	12	
11	09164-17011	WASHER (17.3X34X1)	2	
12	09205-05007	PIN (5X36)	1	
13-1	09160-38003	WASHER (38X52X0.85)	AR	
13-2	09160-38004	WASHER (38X52X0.9)	AR	
13-3	09160-38005	WASHER (38X52X0.95)	AR	
13-4	09160-38006	WASHER (38X52X1)	AR	
13-5	09160-38007	WASHER (38X52X1.05)	AR	
13-6	09160-38008	WASHER (38X52X1.1)	AR	
13-7	09160-38009	WASHER (38X52X1.15)	AR	
13-8	09160-38010	WASHER (38X52X1.2)	AR	

FIG.272B(1-L-14) FRONT DIFFERENTIAL GEAR (5MT:4WD)
FIG.272C(2-B-2) FRONT DIFFERENTIAL GEAR (6MT:2WD)
FIG.272D(2-B-4) FRONT DIFFERENTIAL GEAR (6MT:4WD)
FIG.272E(2-B-6) FRONT DIFFERENTIAL GEAR (6AT:K10C)
FIG.272F(2-B-7) FRONT DIFFERENTIAL GEAR (6AT:K14C)

FIG.272A

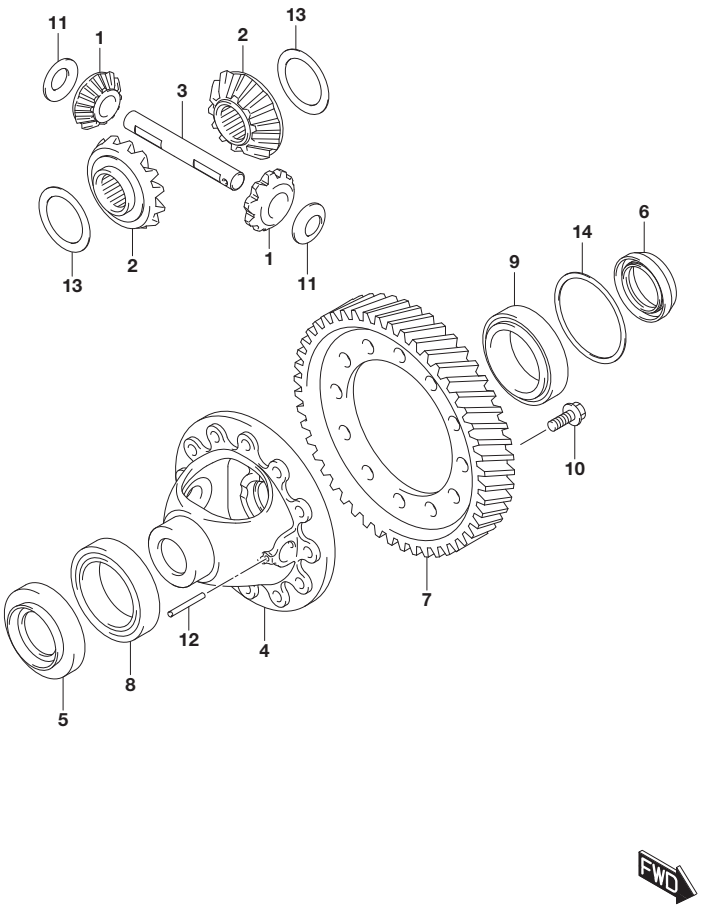

FIG.272A (1-L-13) FRONT DIFFERENTIAL GEAR (5MT:2WD)

REF NO.	PART NO.	DESCRIPTION	Q'TY	REMARKS
14-1	29541-79JA0-100	SHIM, DIFF SIDE BRG (67X75X1.00)	AR	
14-2	29541-79JA0-104	SHIM, DIFF SIDE BRG (67X75X1.04)	AR	
14-3	29541-79JA0-108	SHIM, DIFF SIDE BRG (67X75X1.08)	AR	
14-4	29541-79JA0-112	SHIM, DIFF SIDE BRG (67X75X1.12)	AR	
14-5	29541-79JA0-116	SHIM, DIFF SIDE BRG (67X75X1.16)	AR	
14-6	29541-79JA0-120	SHIM, DIFF SIDE BRG (67X75X1.20)	AR	
14-7	29541-79JA0-124	SHIM, DIFF SIDE BRG (67X75X1.24)	AR	
14-8	29541-79JA0-128	SHIM, DIFF SIDE BRG (67X75X1.28)	AR	
14-9	29541-79JA0-132	SHIM, DIFF SIDE BRG (67X75X1.32)	AR	
14-10	29541-79JA0-136	SHIM, DIFF SIDE BRG (67X75X1.36)	AR	
14-11	29541-79JA0-140	SHIM, DIFF SIDE BRG (67X75X1.40)	AR	
14-12	29541-79JA0-144	SHIM, DIFF SIDE BRG (67X75X1.44)	AR	
14-13	29541-79JA0-148	SHIM, DIFF SIDE BRG (67X75X1.48)	AR	
14-14	29541-79JA0-152	SHIM, DIFF SIDE BRG (67X75X1.52)	AR	
14-15	29541-79JA0-156	SHIM, DIFF SIDE BRG (67X75X1.56)	AR	
14-16	29541-79JA0-160	SHIM, DIFF SIDE BRG (67X75X1.60)	AR	
14-17	29541-79JA0-164	SHIM, DIFF SIDE BRG (67X75X1.64)	AR	
14-18	29541-79JA0-168	SHIM, DIFF SIDE BRG (67X75X1.68)	AR	

FIG.272B

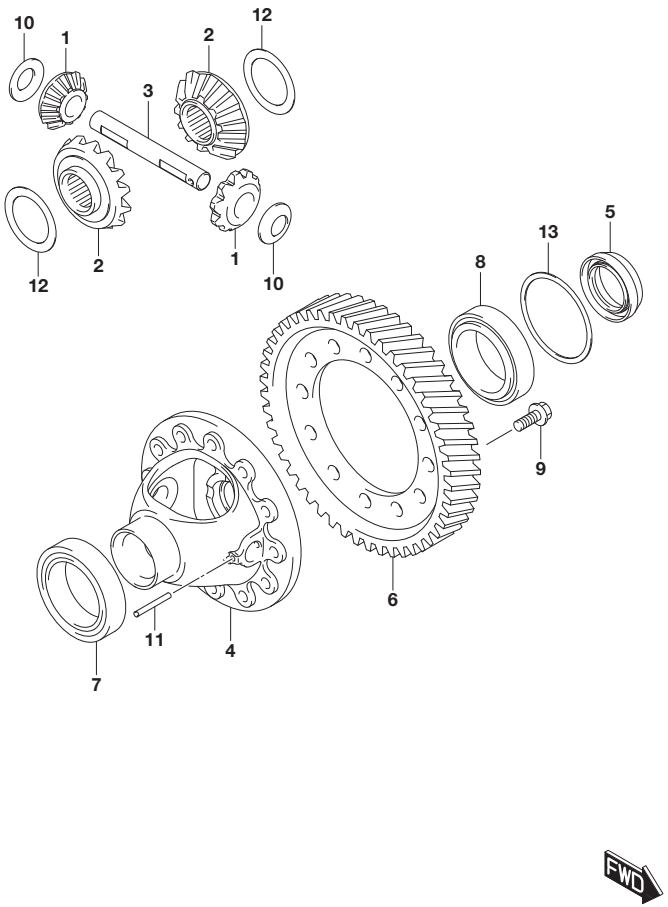

FIG.272B (1-L-14) FRONT DIFFERENTIAL GEAR (5MT:4WD)

REF NO.	PART NO.	DESCRIPTION	Q'TY	REMARKS
1	27331-61MA0	PINION, DIFFERENTIAL	2	
2	27341-61MA0	GEAR, DIFFERENTIAL SIDE	2	
3	27351-80J00	SHAFT, DIFF SIDE PINION	1	
4	27411-64R40	CASE, FR DIFF	1	
5	27432-54LA0	OIL SEAL, DIFF SIDE	1	
6	27511-64R00	GEAR, FINAL	1	
7	27521-79JA0	BEARING ASSY, DIFF SIDE RH	1	
8	27524-79JA0	BEARING ASSY, DIFF SIDE LH	1	
9	09103-10189	BOLT (10X23)	12	
10	09164-17011	WASHER (17.3X34X1)	2	
11	09205-05007	PIN (5X36)	1	
12-1	09160-38003	WASHER (38X52X0.85)	AR	
12-2	09160-38004	WASHER (38X52X0.9)	AR	
12-3	09160-38005	WASHER (38X52X0.95)	AR	
12-4	09160-38006	WASHER (38X52X1)	AR	
12-5	09160-38007	WASHER (38X52X1.05)	AR	
12-6	09160-38008	WASHER (38X52X1.1)	AR	
12-7	09160-38009	WASHER (38X52X1.15)	AR	
12-8	09160-38010	WASHER (38X52X1.2)	AR	
13-1	29541-79JA0-100	SHIM, DIFF SIDE BRG (67X75X1.00)	AR	
13-2	29541-79JA0-104	SHIM, DIFF SIDE BRG (67X75X1.04)	AR	
13-3	29541-79JA0-108	SHIM, DIFF SIDE BRG (67X75X1.08)	AR	
13-4	29541-79JA0-112	SHIM, DIFF SIDE BRG (67X75X1.12)	AR	
13-5	29541-79JA0-116	SHIM, DIFF SIDE BRG (67X75X1.16)	AR	
13-6	29541-79JA0-120	SHIM, DIFF SIDE BRG (67X75X1.20)	AR	
13-7	29541-79JA0-124	SHIM, DIFF SIDE BRG (67X75X1.24)	AR	
13-8	29541-79JA0-128	SHIM, DIFF SIDE BRG (67X75X1.28)	AR	

FIG.272B

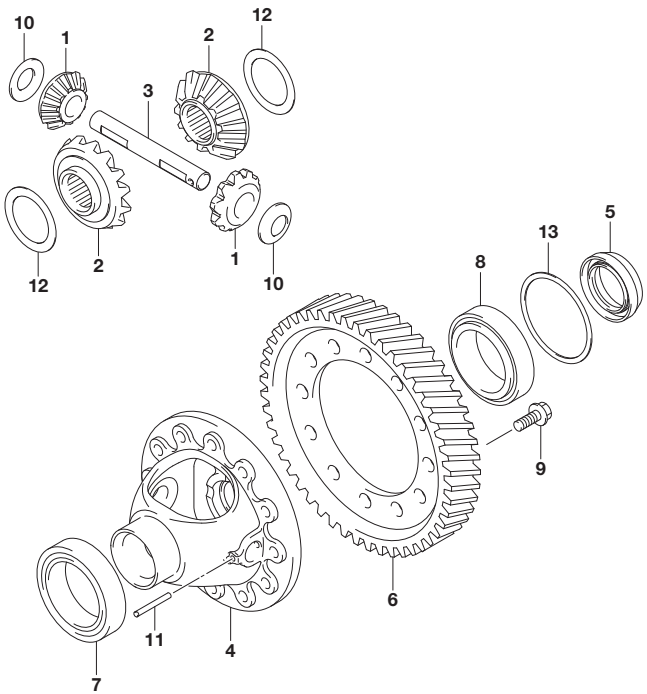

FIG.272B (1-L-15) FRONT DIFFERENTIAL GEAR (5MT:4WD)

REF NO.	PART NO.	DESCRIPTION	Q'TY	REMARKS
13-9	29541-79JA0-132	SHIM, DIFF SIDE BRG (67X75X1.32)	AR	
13-10	29541-79JA0-136	SHIM, DIFF SIDE BRG (67X75X1.36)	AR	
13-11	29541-79JA0-140	SHIM, DIFF SIDE BRG (67X75X1.40)	AR	
13-12	29541-79JA0-144	SHIM, DIFF SIDE BRG (67X75X1.44)	AR	
13-13	29541-79JA0-148	SHIM, DIFF SIDE BRG (67X75X1.48)	AR	
13-14	29541-79JA0-152	SHIM, DIFF SIDE BRG (67X75X1.52)	AR	
13-15	29541-79JA0-156	SHIM, DIFF SIDE BRG (67X75X1.56)	AR	
13-16	29541-79JA0-160	SHIM, DIFF SIDE BRG (67X75X1.60)	AR	
13-17	29541-79JA0-164	SHIM, DIFF SIDE BRG (67X75X1.64)	AR	
13-18	29541-79JA0-168	SHIM, DIFF SIDE BRG (67X75X1.68)	AR	

FIG.272C

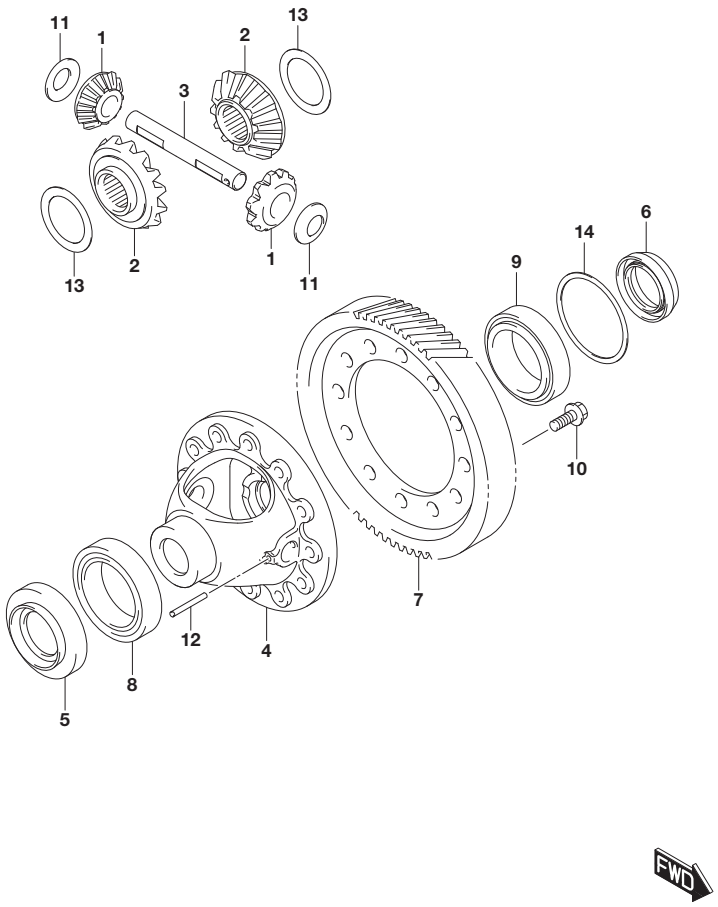

FIG.272C (2-B-2) FRONT DIFFERENTIAL GEAR (6MT:2WD)

REF NO.	PART NO.	DESCRIPTION	Q'TY	REMARKS
1	27331-61MA0	PINION, DIFFERENTIAL	2	
2	27341-61MA0	GEAR, DIFFERENTIAL SIDE	2	
3	27351-80J00	SHAFT, DIFF SIDE PINION	1	
4	27411-54L00	CASE, FR DIFF	1	
5	27431-68M00	OIL SEAL, DIFF SIDE RH	1	
6	27432-54LA0	OIL SEAL, DIFF SIDE LH	1	
7-1	27511-68M00	GEAR, FINAL	1	K14C
7-2	27511-68M20	GEAR, FINAL	1	K14D
8	27521-79JA0	BEARING ASSY, DIFF SIDE RH	1	
9	27524-79JA0	BEARING ASSY, DIFF SIDE LH	1	
10	09103-10189	BOLT (10X23)	12	
11	09164-17011	WASHER (17.3X34X1)	2	
12	09205-05007	PIN (5X36)	1	
13-1	09160-38003	WASHER (38X52X0.85)	AR	
13-2	09160-38004	WASHER (38X52X0.9)	AR	
13-3	09160-38005	WASHER (38X52X0.95)	AR	
13-4	09160-38006	WASHER (38X52X1)	AR	
13-5	09160-38007	WASHER (38X52X1.05)	AR	
13-6	09160-38008	WASHER (38X52X1.1)	AR	
13-7	09160-38009	WASHER (38X52X1.15)	AR	
13-8	09160-38010	WASHER (38X52X1.2)	AR	
14-1	29541-79JA0-100	SHIM, DIFF SIDE BRG (67X75X1.00)	AR	
14-2	29541-79JA0-104	SHIM, DIFF SIDE BRG (67X75X1.04)	AR	
14-3	29541-79JA0-108	SHIM, DIFF SIDE BRG (67X75X1.08)	AR	
14-4	29541-79JA0-112	SHIM, DIFF SIDE BRG (67X75X1.12)	AR	
14-5	29541-79JA0-116	SHIM, DIFF SIDE BRG (67X75X1.16)	AR	
14-6	29541-79JA0-120	SHIM, DIFF SIDE BRG (67X75X1.20)	AR	
14-7	29541-79JA0-124	SHIM, DIFF SIDE BRG (67X75X1.24)	AR	

FIG.272C

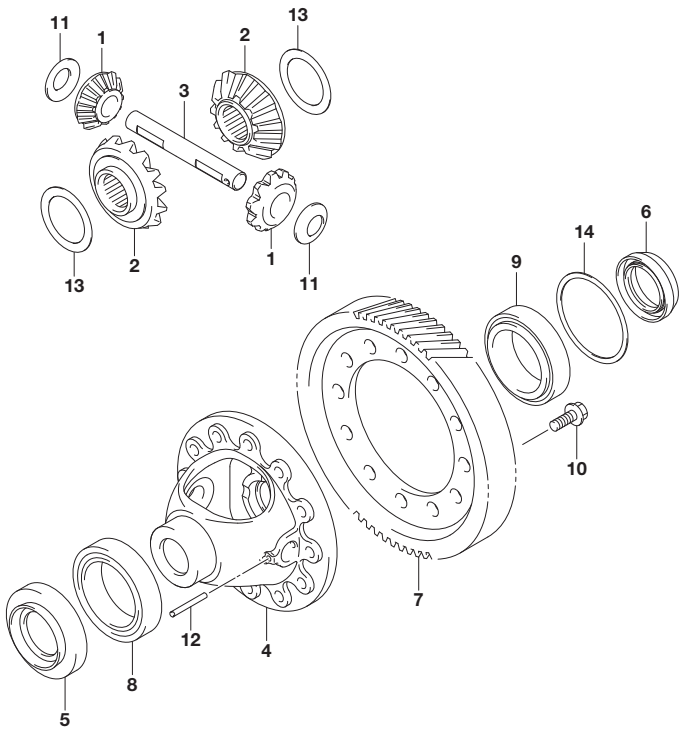

FIG.272C (2-B-3) FRONT DIFFERENTIAL GEAR (6MT:2WD)

REF NO.	PART NO.	DESCRIPTION	Q'TY	REMARKS
14-8	29541-79JA0-128	SHIM, DIFF SIDE BRG (67X75X1.28)	AR	
14-9	29541-79JA0-132	SHIM, DIFF SIDE BRG (67X75X1.32)	AR	
14-10	29541-79JA0-136	SHIM, DIFF SIDE BRG (67X75X1.36)	AR	
14-11	29541-79JA0-140	SHIM, DIFF SIDE BRG (67X75X1.40)	AR	
14-12	29541-79JA0-144	SHIM, DIFF SIDE BRG (67X75X1.44)	AR	
14-13	29541-79JA0-148	SHIM, DIFF SIDE BRG (67X75X1.48)	AR	
14-14	29541-79JA0-152	SHIM, DIFF SIDE BRG (67X75X1.52)	AR	
14-15	29541-79JA0-156	SHIM, DIFF SIDE BRG (67X75X1.56)	AR	
14-16	29541-79JA0-160	SHIM, DIFF SIDE BRG (67X75X1.60)	AR	
14-17	29541-79JA0-164	SHIM, DIFF SIDE BRG (67X75X1.64)	AR	
14-18	29541-79JA0-168	SHIM, DIFF SIDE BRG (67X75X1.68)	AR	

FIG.272D

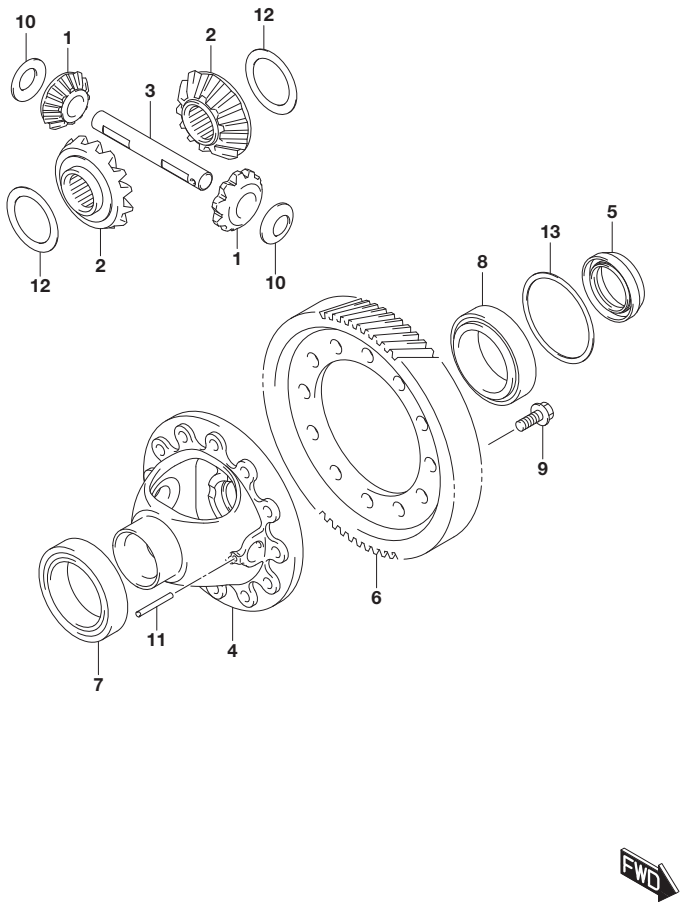

FIG.272D (2-B-4) FRONT DIFFERENTIAL GEAR (6MT:4WD)

REF NO.	PART NO.	DESCRIPTION	Q'TY	REMARKS
1	27331-61MA0	PINION, DIFFERENTIAL	2	
2	27341-61MA0	GEAR, DIFFERENTIAL SIDE	2	
3	27351-80J00	SHAFT, DIFF SIDE PINION	1	
4	27411-64R40	CASE, FR DIFF	1	
5	27432-54LA0	OIL SEAL, DIFF SIDE	1	
6-1	27511-68M00	GEAR, FINAL	1	K14C
6-2	27511-68M20	GEAR, FINAL	1	K14D
7	27521-79JA0	BEARING ASSY, DIFF SIDE RH	1	
8	27524-79JA0	BEARING ASSY, DIFF SIDE LH	1	
9	09103-10189	BOLT (10X23)	12	
10	09164-17011	WASHER (17.3X34X1)	2	
11	09205-05007	PIN (5X36)	1	
12-1	09160-38003	WASHER (38X52X0.85)	AR	
12-2	09160-38004	WASHER (38X52X0.9)	AR	
12-3	09160-38005	WASHER (38X52X0.95)	AR	
12-4	09160-38006	WASHER (38X52X1)	AR	
12-5	09160-38007	WASHER (38X52X1.05)	AR	
12-6	09160-38008	WASHER (38X52X1.1)	AR	
12-7	09160-38009	WASHER (38X52X1.15)	AR	
12-8	09160-38010	WASHER (38X52X1.2)	AR	
13-1	29541-79JA0-100	SHIM, DIFF SIDE BRG (67X75X1.00)	AR	
13-2	29541-79JA0-104	SHIM, DIFF SIDE BRG (67X75X1.04)	AR	
13-3	29541-79JA0-108	SHIM, DIFF SIDE BRG (67X75X1.08)	AR	
13-4	29541-79JA0-112	SHIM, DIFF SIDE BRG (67X75X1.12)	AR	
13-5	29541-79JA0-116	SHIM, DIFF SIDE BRG (67X75X1.16)	AR	
13-6	29541-79JA0-120	SHIM, DIFF SIDE BRG (67X75X1.20)	AR	
13-7	29541-79JA0-124	SHIM, DIFF SIDE BRG (67X75X1.24)	AR	
13-8	29541-79JA0-128	SHIM, DIFF SIDE BRG (67X75X1.28)	AR	

FIG.272D

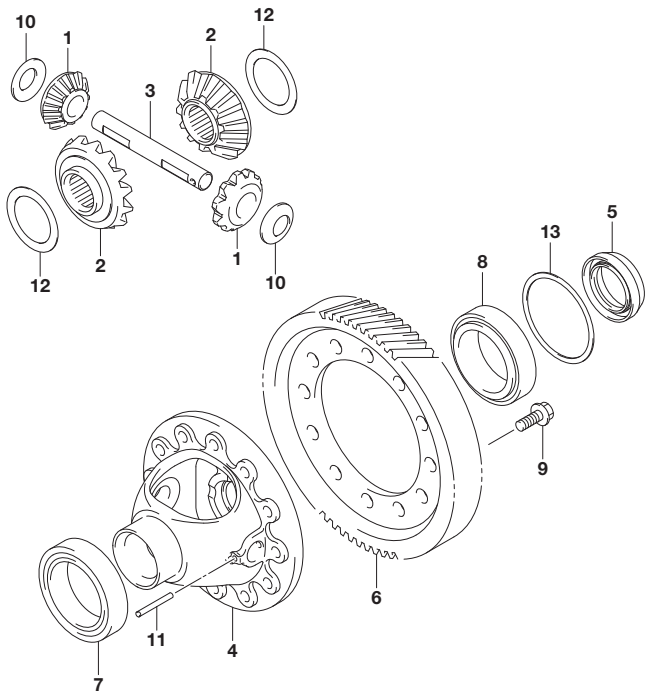

FIG.272D (2-B-5) FRONT DIFFERENTIAL GEAR (6MT:4WD)

REF NO.	PART NO.	DESCRIPTION	Q'TY	REMARKS
13-9	29541-79JA0-132	SHIM, DIFF SIDE BRG (67X75X1.32)	AR	
13-10	29541-79JA0-136	SHIM, DIFF SIDE BRG (67X75X1.36)	AR	
13-11	29541-79JA0-140	SHIM, DIFF SIDE BRG (67X75X1.40)	AR	
13-12	29541-79JA0-144	SHIM, DIFF SIDE BRG (67X75X1.44)	AR	
13-13	29541-79JA0-148	SHIM, DIFF SIDE BRG (67X75X1.48)	AR	
13-14	29541-79JA0-152	SHIM, DIFF SIDE BRG (67X75X1.52)	AR	
13-15	29541-79JA0-156	SHIM, DIFF SIDE BRG (67X75X1.56)	AR	
13-16	29541-79JA0-160	SHIM, DIFF SIDE BRG (67X75X1.60)	AR	
13-17	29541-79JA0-164	SHIM, DIFF SIDE BRG (67X75X1.64)	AR	
13-18	29541-79JA0-168	SHIM, DIFF SIDE BRG (67X75X1.68)	AR	

FIG.272E

FIG.272E (2-B-6) FRONT DIFFERENTIAL GEAR (6AT:K10C)

REF NO.	PART NO.	DESCRIPTION	Q'TY	REMARKS
1-1	27300-65M70	GEAR ASSY, DIFFERENTIAL	1	2WD
1-2	27300-64RJ0	GEAR ASSY, DIFFERENTIAL	1	4WD
2	27453-78MT0	SHIM SET, DIFF SIDE BRG	1	
3-1	27481-78M10	RACE, TAPER ROLLER BRG OUTER	1	2WD
3-2	27481-54P10	RACE, TAPER ROLLER BRG OUTER	1	4WD
4	27482-78M10	RACE, TAPER ROLLER BRG INNER	1	

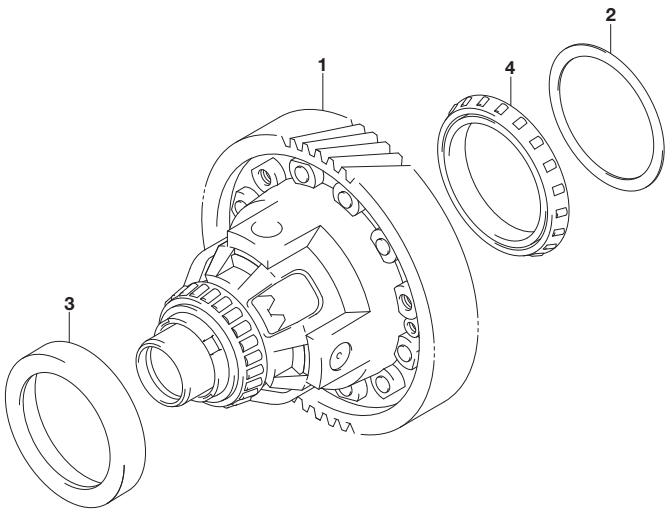

FIG.272F

FIG.272F (2-B-7) FRONT DIFFERENTIAL GEAR (6AT:K14C)

REF NO.	PART NO.	DESCRIPTION	Q'TY	REMARKS
1-1	27300-68M10	GEAR ASSY, DIFFERENTIAL	1	2WD
1-2	27300-68MH0	GEAR ASSY, DIFFERENTIAL	1	4WD
2	27453-78MT0	SHIM SET, DIFF SIDE BRG	1	
3-1	27481-78M10	RACE, TAPER ROLLER BRG OUTER	1	2WD
3-2	27481-54P10	RACE, TAPER ROLLER BRG OUTER	1	4WD
4	27482-68M10	RACE, TAPER ROLLER BRG INNER	1	

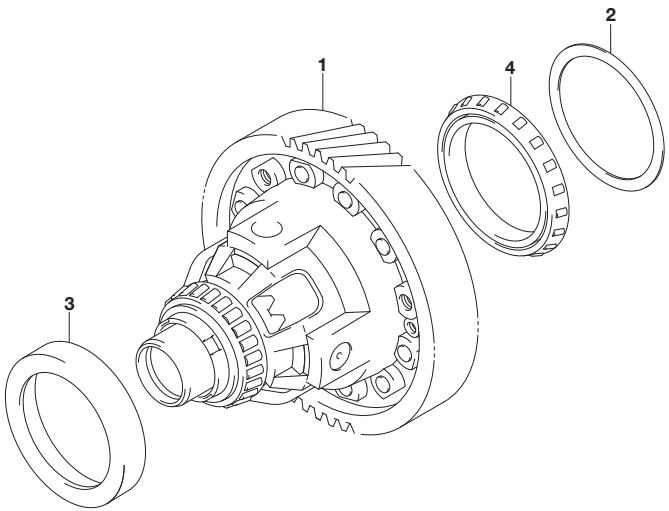

FIG.282A

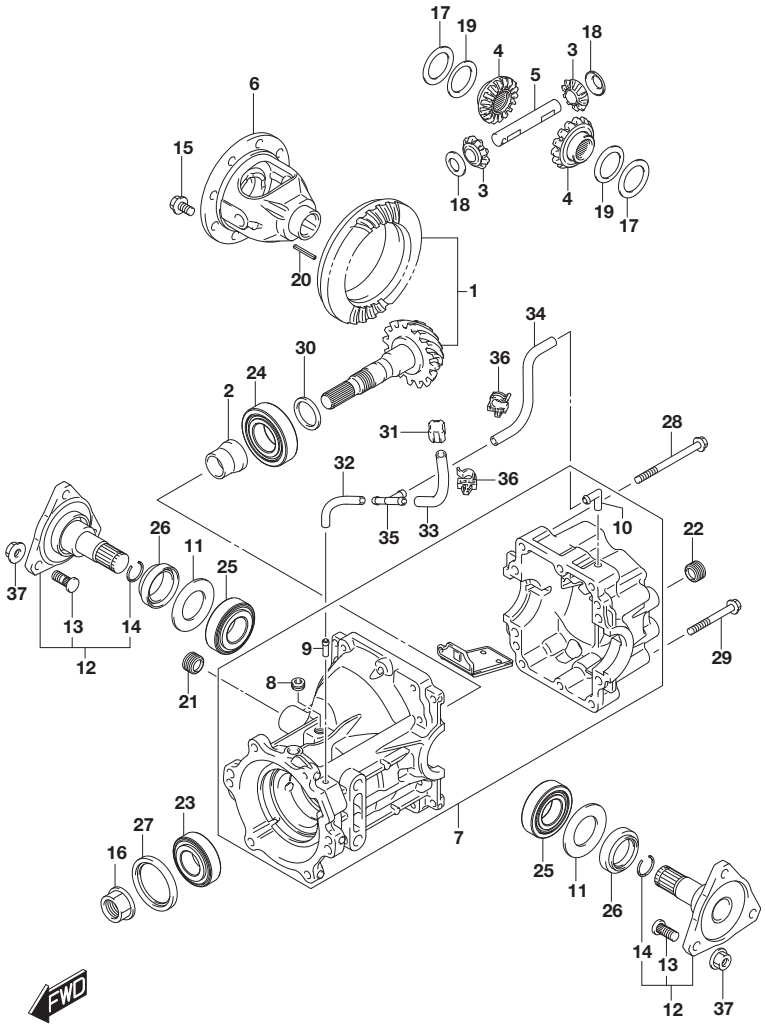

FIG.282A (2-B-8) REAR DIFFERENTIAL GEAR (4WD:UP TO 2019-2)

REF NO.	PART NO.	DESCRIPTION	Q'TY	REMARKS
1	27300-61850	BEVEL PINION & GEAR SET	1	
2	27315-63J00	SPACER, BEVEL PINION	1	
3	27331-78FJ1	PINION, DIFFERENTIAL	2	
4	27341-61M00	GEAR, DIFF	2	
5	27351-62B00	SHAFT, DIFF SIDE PINION	1	
6	27411-57L00	CASE, DIFFERENTIAL	1	
7	27450-57L00	CARRIER ASSY, DIFFERENTIAL	1	
8	09246-08004	.PLUG (3/8PT,H:7.5)	1	
9	09364-06007	.UNION	1	
10	09364-08017	.UNION	1	
11-1	27453-63J10	SHIM, DIFF SIDE (T:0.45)	AR	
11-2	27453-63J00-230	SHIM, DIFF SIDE (T:2.30)	AR	
11-3	27453-63J00-235	SHIM, DIFF SIDE (T:2.35)	AR	
11-4	27453-63J00-240	SHIM, DIFF SIDE (T:2.40)	AR	
11-5	27453-63J00-245	SHIM, DIFF SIDE (T:2.45)	AR	
11-6	27453-63J00-250	SHIM, DIFF SIDE (T:2.50)	AR	
11-7	27453-63J00-255	SHIM, DIFF SIDE (T:2.55)	AR	
11-8	27453-63J00-260	SHIM, DIFF SIDE (T:2.60)	AR	
11-9	27453-63J00-265	SHIM, DIFF SIDE (T:2.65)	AR	
11-10	27453-63J00-270	SHIM, DIFF SIDE (T:2.70)	AR	
12	27780-61M00	FLANGE, DRIVE SHAFT	2	
13	09119-10087	.BOLT (14X25)	6	
14	09381-22015	.RING	2	
15	09103-10309	BOLT (10X16)	8	
16	09159-24011	NUT	1	
17-1	09160-35006	WASHER (35X46X0.9)	AR	
17-2	09160-35008	WASHER (35X46X0.95)	AR	
17-3	09160-35002	WASHER (35X46X1.0)	AR	
17-4	09160-35009	WASHER (35X46X1.05)	AR	
17-5	09160-35003	WASHER (35X46X1.10)	AR	
17-6	09160-35010	WASHER (35X46X1.15)	AR	
17-7	09160-35004	WASHER (35X46X1.20)	AR	
18	09164-15003	WASHER (15X30X1.0)	2	
19	09164-35003	WASHER (35.2X44X0.9)	2	
20	09205-05016	PIN (5X32)	1	
21	09246-16010	PLUG (L:15)	1	

FIG.282A

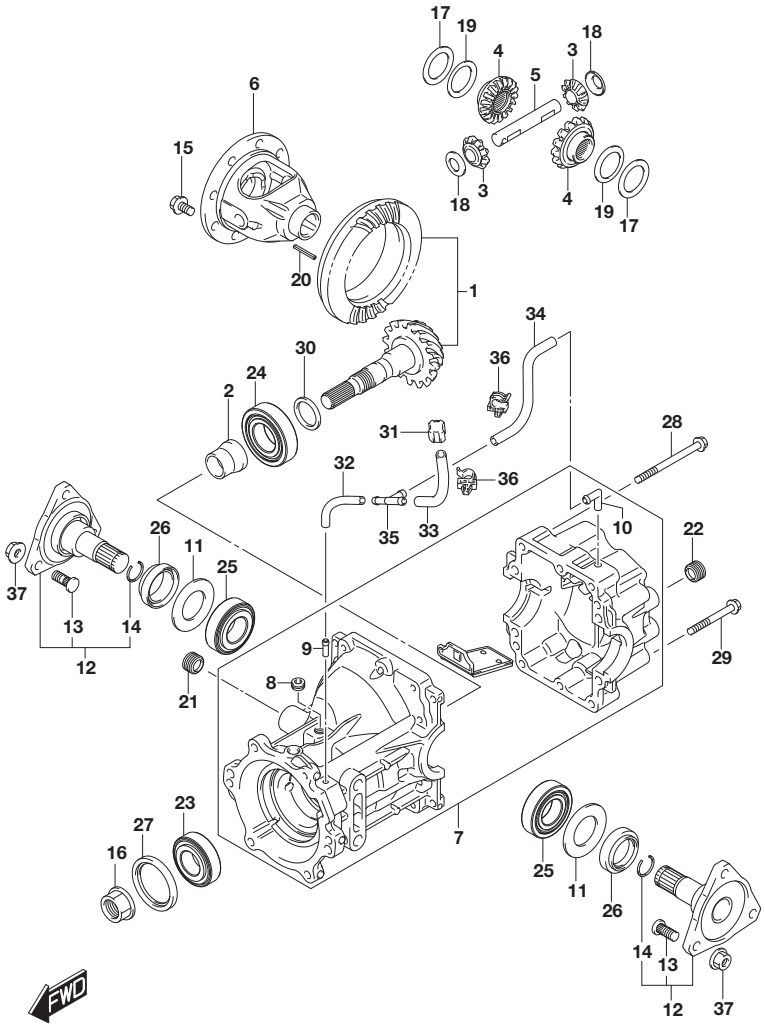

FIG.282A (2-B-9) REAR DIFFERENTIAL GEAR (4WD:UP TO 2019-2)

REF NO.	PART NO.	DESCRIPTION	Q'TY	REMARKS
22	09246-16010	PLUG (L:15)	1	
23	09265-25034	BEARING (25X62X18.25)	1	
24	09265-30010	BEARING (30X72X20.75)	1	
25	09265-35013	BEARING (35X62X20)	2	
26	09283-35057	OIL SEAL (35X52X14)	2	
27	09283-50010	OIL SEAL (49.9X64X7)	1	
28	01550-0855C	BOLT	6	
29	01550-0890C	BOLT	4	
30-1	09181-30001	SHIM (30X38X0.3)	AR	
30-2	29521-74C00	SHIM (30X40X0.60)	AR	
30-3	29521-74C10	SHIM (30X40X0.63)	AR	
30-4	29521-74C20	SHIM (30X40X0.66)	AR	
30-5	29521-74C30	SHIM (30X40X0.69)	AR	
30-6	29521-74C40	SHIM (30X40X0.72)	AR	
30-7	29521-74C50	SHIM (30X40X0.75)	AR	
30-8	29521-74C60	SHIM (30X40X0.78)	AR	
30-9	29521-74C70	SHIM (30X40X0.81)	AR	
30-10	29521-74C80	SHIM (30X40X0.84)	AR	
30-11	29521-74C90	SHIM (30X40X0.87)	AR	
30-12	29521-75C10	SHIM (30X40X0.90)	AR	
30-13	29521-75C20	SHIM (30X40X0.93)	AR	
30-14	29521-75C30	SHIM (30X40X0.96)	AR	
30-15	29521-75C40	SHIM (30X40X0.99)	AR	
30-16	29521-75C50	SHIM (30X40X1.02)	AR	
30-17	29521-75C60	SHIM (30X40X1.05)	AR	
30-18	29521-75C70	SHIM (30X40X1.08)	AR	
30-19	29521-75C80	SHIM (30X40X1.11)	AR	
31	27991-65D01	PLUG, BREATHER	1	
32	09352-50005-600	HOSE (5X8.2X600)	1	L:600->90
33	09352-70113-600	HOSE (7X11X600)	1	L:600->110
34	09352-70113-600	HOSE (7X11X600)	1	L:600->200
35	09367-08005	3 WAY	1	
36	09403-11314	CLAMP	2	
37	08316-1010B	NUT	6	

FIG.282B

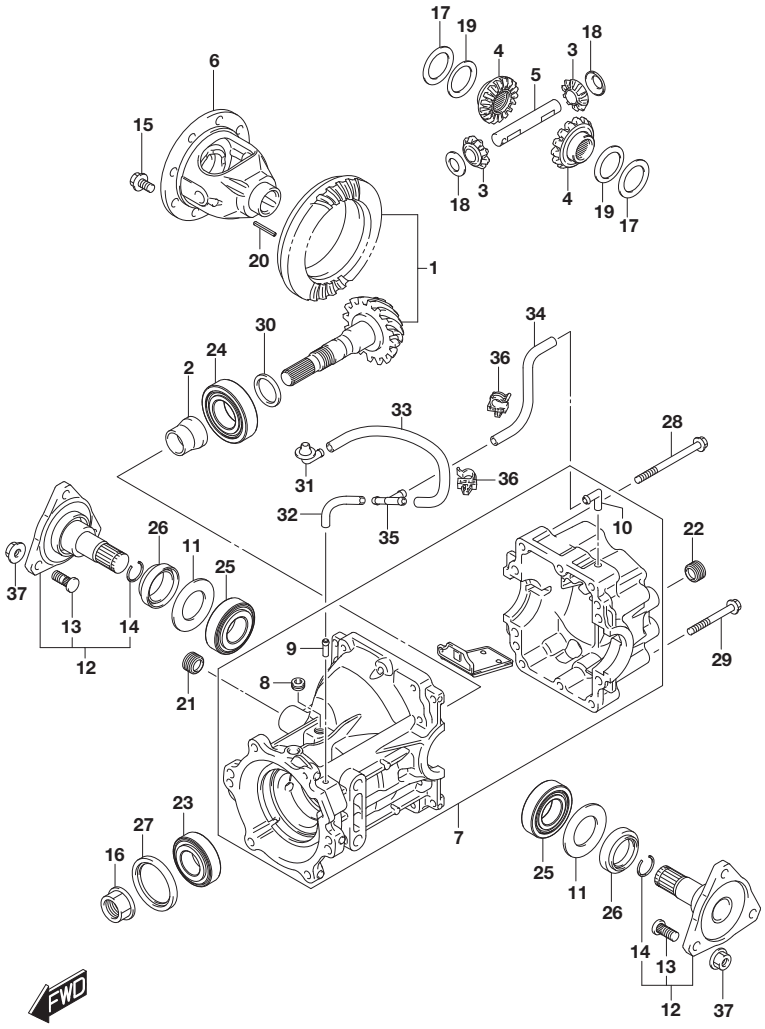

FIG.282B (2-B-10) REAR DIFFERENTIAL GEAR (4WD:FROM 2019-3)

REF NO.	PART NO.	DESCRIPTION	Q'TY	REMARKS
1	27300-61850	BEVEL PINION & GEAR SET	1	
2	27315-63J00	SPACER, BEVEL PINION	1	
3	27331-78FJ1	PINION, DIFFERENTIAL	2	
4	27341-61M00	GEAR, DIFF	2	
5	27351-62B00	SHAFT, DIFF SIDE PINION	1	
6	27411-57L00	CASE, DIFFERENTIAL	1	
7	27450-57L00	CARRIER ASSY, DIFFERENTIAL	1	
8	09246-08004	.PLUG (3/8PT,H:7.5)	1	
9	09364-06007	.UNION	1	
10	09364-08017	.UNION	1	
11-1	27453-63J10	SHIM, DIFF SIDE (T:0.45)	AR	
11-2	27453-63J00-230	SHIM, DIFF SIDE (T:2.30)	AR	
11-3	27453-63J00-235	SHIM, DIFF SIDE (T:2.35)	AR	
11-4	27453-63J00-240	SHIM, DIFF SIDE (T:2.40)	AR	
11-5	27453-63J00-245	SHIM, DIFF SIDE (T:2.45)	AR	
11-6	27453-63J00-250	SHIM, DIFF SIDE (T:2.50)	AR	
11-7	27453-63J00-255	SHIM, DIFF SIDE (T:2.55)	AR	
11-8	27453-63J00-260	SHIM, DIFF SIDE (T:2.60)	AR	
11-9	27453-63J00-265	SHIM, DIFF SIDE (T:2.65)	AR	
11-10	27453-63J00-270	SHIM, DIFF SIDE (T:2.70)	AR	
12	27780-61M00	FLANGE, DRIVE SHAFT	2	
13	09119-10087	.BOLT (14X25)	6	
14	09381-22015	.RING	2	
15	09103-10309	BOLT (10X16)	8	
16	09159-24011	NUT	1	
17-1	09160-35006	WASHER (35X46X0.9)	AR	
17-2	09160-35008	WASHER (35X46X0.95)	AR	
17-3	09160-35002	WASHER (35X46X1.0)	AR	
17-4	09160-35009	WASHER (35X46X1.05)	AR	
17-5	09160-35003	WASHER (35X46X1.10)	AR	
17-6	09160-35010	WASHER (35X46X1.15)	AR	
17-7	09160-35004	WASHER (35X46X1.20)	AR	
18	09164-15003	WASHER (15X30X1.0)	2	
19	09164-35003	WASHER (35.2X44X0.9)	2	
20	09205-05016	PIN (5X32)	1	
21	09246-16010	PLUG (L:15)	1	

FIG.282B

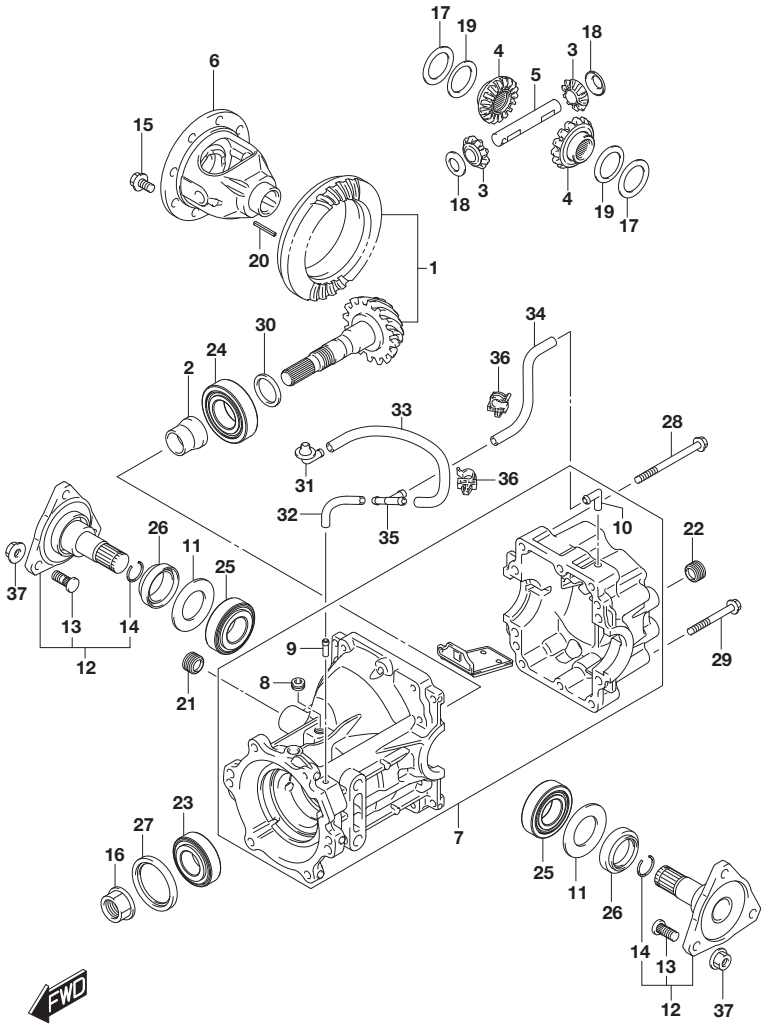

FIG.282B (2-B-11) REAR DIFFERENTIAL GEAR (4WD:FROM 2019-3)

REF NO.	PART NO.	DESCRIPTION	Q'TY	REMARKS
22	09246-16010	PLUG (L:15)	1	
23	09265-25034	BEARING (25X62X18.25)	1	
24	09265-30010	BEARING (30X72X20.75)	1	
25	09265-35013	BEARING (35X62X20)	2	
26	09283-35057	OIL SEAL (35X52X14)	2	
27	09283-50010	OIL SEAL (49.9X64X7)	1	
28	01550-0855C	BOLT	6	
29	01550-0890C	BOLT	4	
30-1	09181-30001	SHIM (30X38X0.3)	AR	
30-2	29521-74C00	SHIM (30X40X0.60)	AR	
30-3	29521-74C10	SHIM (30X40X0.63)	AR	
30-4	29521-74C20	SHIM (30X40X0.66)	AR	
30-5	29521-74C30	SHIM (30X40X0.69)	AR	
30-6	29521-74C40	SHIM (30X40X0.72)	AR	
30-7	29521-74C50	SHIM (30X40X0.75)	AR	
30-8	29521-74C60	SHIM (30X40X0.78)	AR	
30-9	29521-74C70	SHIM (30X40X0.81)	AR	
30-10	29521-74C80	SHIM (30X40X0.84)	AR	
30-11	29521-74C90	SHIM (30X40X0.87)	AR	
30-12	29521-75C10	SHIM (30X40X0.90)	AR	
30-13	29521-75C20	SHIM (30X40X0.93)	AR	
30-14	29521-75C30	SHIM (30X40X0.96)	AR	
30-15	29521-75C40	SHIM (30X40X0.99)	AR	
30-16	29521-75C50	SHIM (30X40X1.02)	AR	
30-17	29521-75C60	SHIM (30X40X1.05)	AR	
30-18	29521-75C70	SHIM (30X40X1.08)	AR	
30-19	29521-75C80	SHIM (30X40X1.11)	AR	
31	27966-54P00	UNION, REAR DIFF BREATHER HOSE	1	
32	09352-50005-600	HOSE (5X8.2X600)	1	L:600->90
33	09352-70113-600	HOSE (7X11X600)	1	L:600->260
34	09352-70113-600	HOSE (7X11X600)	1	L:600->200
35	09367-08005	3 WAY	1	
36	09403-11314	CLAMP	2	
37	08316-1010B	NUT	6	

FIG.286A

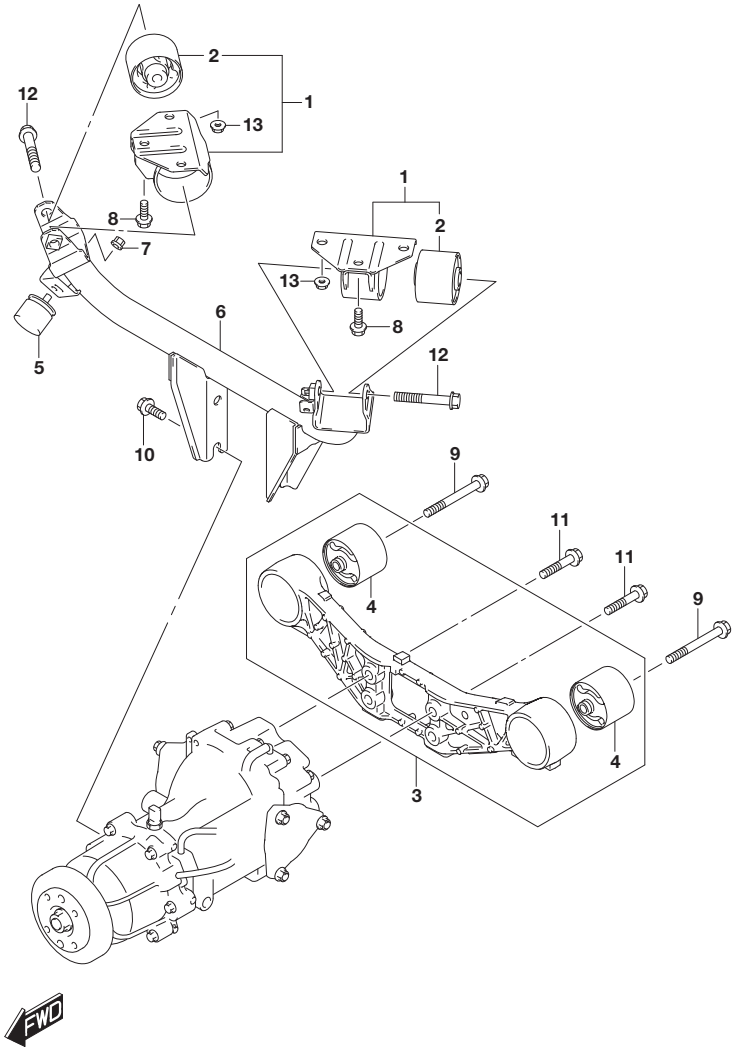

FIG.286A (2-B-12) REAR DIFFERENTIAL MOUNTING (4WD)

REF NO.	PART NO.	DESCRIPTION	Q'TY	REMARKS
1	29610-61M01	MOUNT, DIFFERENTIAL FRONT	2	
2	27561-61M01	.MOUNT, DIFF FR	2	
3	29620-61M10	BRACKET, DIFF MOUNT RR	1	
4	27562-61M00	.MOUNT, DIFF RR	2	
5	11749-62G01	DAMPER, ENG REAR MOUNTING	1	
6	29651-61M31	ARM, DIFF MOUNT FRONT	1	
7	09159-08075	NUT	1	
8	01551-1025A	BOLT	4	
9	09103-12079	BOLT (12X98)	2	
10	01550-1225A	BOLT	4	
11	01550-1255A	BOLT	4	
12	01550-1275A	BOLT	2	
13	08316-1010A	NUT	2	

APK414-3 P22 286A
REAR DIFFERENTIAL MOUNTING

FIG.288A

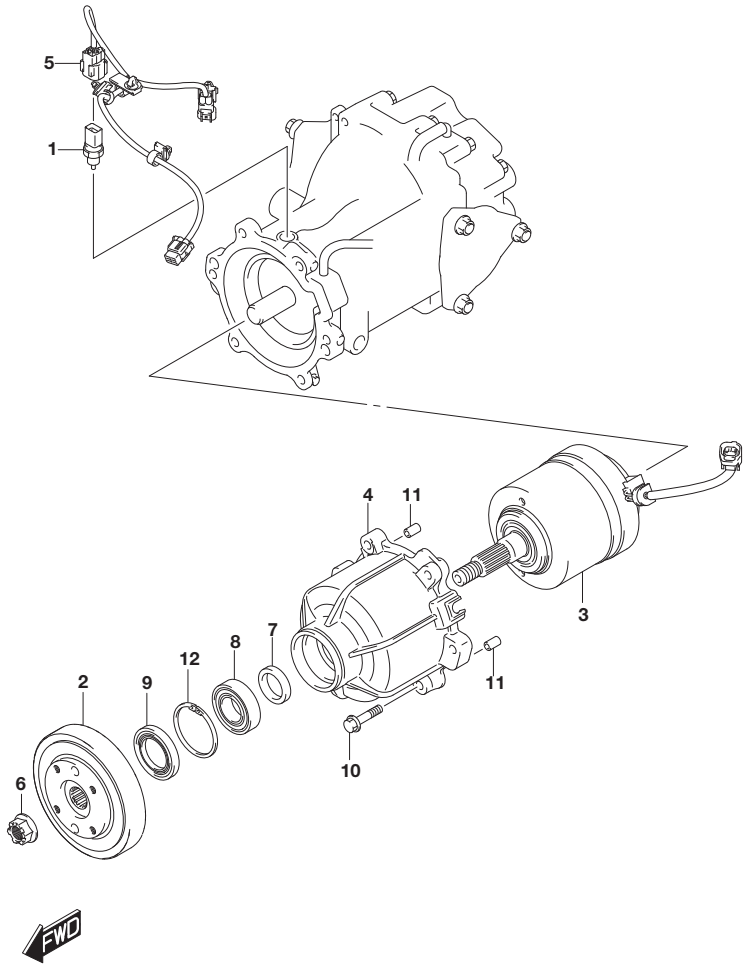

FIG.288A (2-B-13) REAR DIFFERENTIAL TORQUE CONTROL (SEE NOTE)

REF NO.	PART NO.	DESCRIPTION	Q'TY	REMARKS
1	13650-56B00	SENSOR, INLET AIR TEMP	1	
2	27110-61M10	FLANGE, COMPANION	1	
3	27610-79J01	COUPLING, REAR DRIVE	1	
4	27611-79J00	CASE, COUPLING	1	
5	27620-61M00	HARNESS ASSY, COUPLING	1	
6	09159-16021	NUT	1	
7	09180-25101	SPACER (25X38X6.5)	1	
8	09262-25072	BEARING (25X52X15)	1	
9	09283-35049	OIL SEAL (35X55X8)	1	
10	01550-0835C	BOLT	6	
11	04211-09149	PIN	2	
12	08331-41529	CIRCLIP	1	

NOTE : 4WD:TYPE 3:(K10C,K14C)

APK414-3 P22 288A
REAR DIFFERENTIAL TORQUE CONTROL (1)

FIG.288B

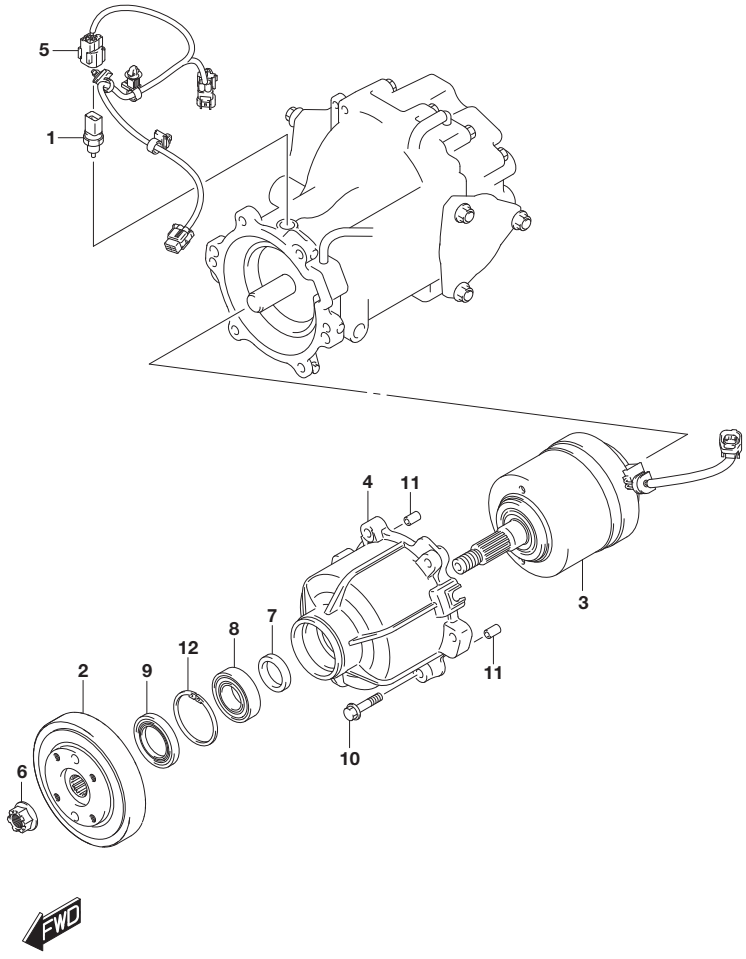

FIG.288B (2-B-14) REAR DIFFERENTIAL TORQUE CONTROL (SEE NOTE)

REF NO.	PART NO.	DESCRIPTION	Q'TY	REMARKS
1	13650-56B00	SENSOR, INLET AIR TEMP	1	
2	27110-61M10	FLANGE, COMPANION	1	
3	27610-79J01	COUPLING, REAR DRIVE	1	
4	27611-79J00	CASE, COUPLING	1	
5	27620-61M10	HARNESS ASSY, COUPLING	1	
6	09159-16021	NUT	1	
7	09180-25101	SPACER (25X38X6.5)	1	
8	09262-25072	BEARING (25X52X15)	1	
9	09283-35049	OIL SEAL (35X55X8)	1	
10	01550-0835C	BOLT	6	
11	04211-09149	PIN	2	
12	08331-41529	CIRCLIP	1	

NOTE : 4WD:(TYPE 3:K14D,TYPE 4)

APK414-3 P22 288B
REAR DIFFERENTIAL TORQUE CONTROL (2)

FIG.290A

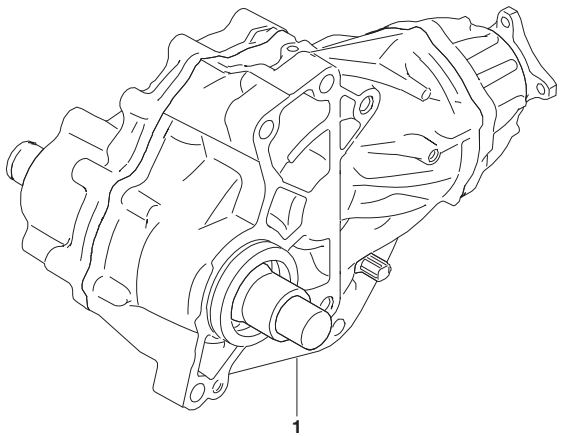

APK414-3 P22 290A
TRANSFER ASSY

FIG.290A (2-C-2) TRANSFER ASSY (4WD)

REF NO.	PART NO.	DESCRIPTION	Q'TY	REMARKS
1-1	29000-61M40	TRANSFER ASSY	1	5MT,6MT
1-2	29000-54P21	TRANSFER ASSY	1	6AT:K10C
1-3	29000-54P31	TRANSFER ASSY	1	6AT:K14C

FIG.291A

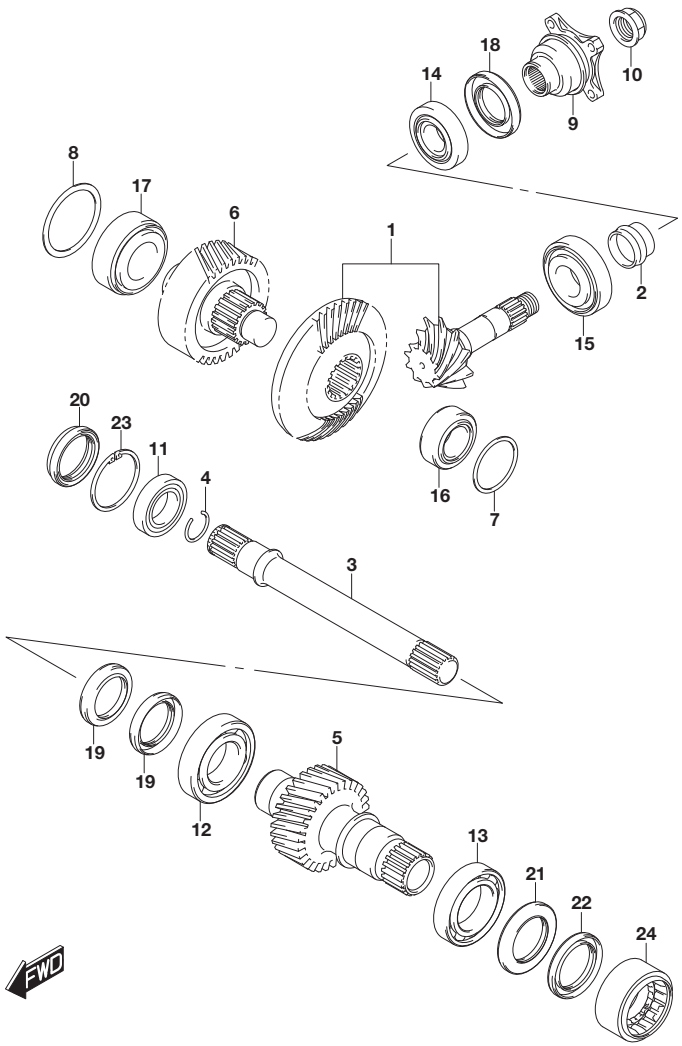

FIG.291A (2-C-3) TRANSFER GEAR (4WD)

REF NO.	PART NO.	DESCRIPTION	Q'TY	REMARKS
1	27301-57810	BEVEL PINION & GEAR SET	1	
2	27315-63J00	SPACER, BEVEL PINION	1	
3-1	27811-57L50	SHAFT, DRIVE INTERMEDIATE	1	5MT,6MT
3-2	27811-54P20	SHAFT, DRIVE INTERMEDIATE	1	6AT:K10C
3-3	27811-54P30	SHAFT, DRIVE INTERMEDIATE	1	6AT:K14C
4	27861-54L01	RING, DRIVE SHAFT SNAP	1	
5-1	29111-61M10	GEAR, REDUCTION DRIVE	1	5MT,6MT
5-2	29111-54P20	GEAR, REDUCTION DRIVE	1	6AT:K10C
5-3	29111-54P30	GEAR, REDUCTION DRIVE	1	6AT:K14C
6	29131-57L00	GEAR, REDUCTION DRIVEN	1	
7-1	29261-57L10-100	SHIM, T/F INPUT LH (T:1.00)	AR	
7-2	29261-57L10-105	SHIM, T/F INPUT LH (T:1.05)	AR	
7-3	29261-57L10-110	SHIM, T/F INPUT LH (T:1.10)	AR	
7-4	29261-57L10-115	SHIM, T/F INPUT LH (T:1.15)	AR	
7-5	29261-57L10-120	SHIM, T/F INPUT LH (T:1.20)	AR	
7-6	29261-57L10-125	SHIM, T/F INPUT LH (T:1.25)	AR	
7-7	29261-57L10-130	SHIM, T/F INPUT LH (T:1.30)	AR	
7-8	29261-57L10-135	SHIM, T/F INPUT LH (T:1.35)	AR	
7-9	29261-57L10-140	SHIM, T/F INPUT LH (T:1.40)	AR	
7-10	29261-57L10-145	SHIM, T/F INPUT LH (T:1.45)	AR	
8-1	29261-80J20-060	SHIM, T/F INPUT RH (T:0.60)	AR	
8-2	29261-80J20-065	SHIM, T/F INPUT RH (T:0.65)	AR	
8-3	29261-80J20-070	SHIM, T/F INPUT RH (T:0.70)	AR	
8-4	29261-80J20-075	SHIM, T/F INPUT RH (T:0.75)	AR	
8-5	29261-80J20-080	SHIM, T/F INPUT RH (T:0.80)	AR	
8-6	29261-80J20-085	SHIM, T/F INPUT RH (T:0.85)	AR	
8-7	29261-80J20-090	SHIM, T/F INPUT RH (T:0.90)	AR	
8-8	29261-80J20-095	SHIM, T/F INPUT RH (T:0.95)	AR	
8-9	29261-80J20-100	SHIM, T/F INPUT RH (T:1.00)	AR	
8-10	29261-80J20-105	SHIM, T/F INPUT RH (T:1.05)	AR	
9	29290-61M00	FLANGE, T/F OUTPUT	1	
10	09159-20016	NUT	1	
11-1	09262-30120	BEARING (30X55X13)	1	5MT,6MT
11-2	09262-30125	BEARING (30X55X13)	1	6AT
12	09262-40016	BEARING (40X80X18)	1	

FIG.291A

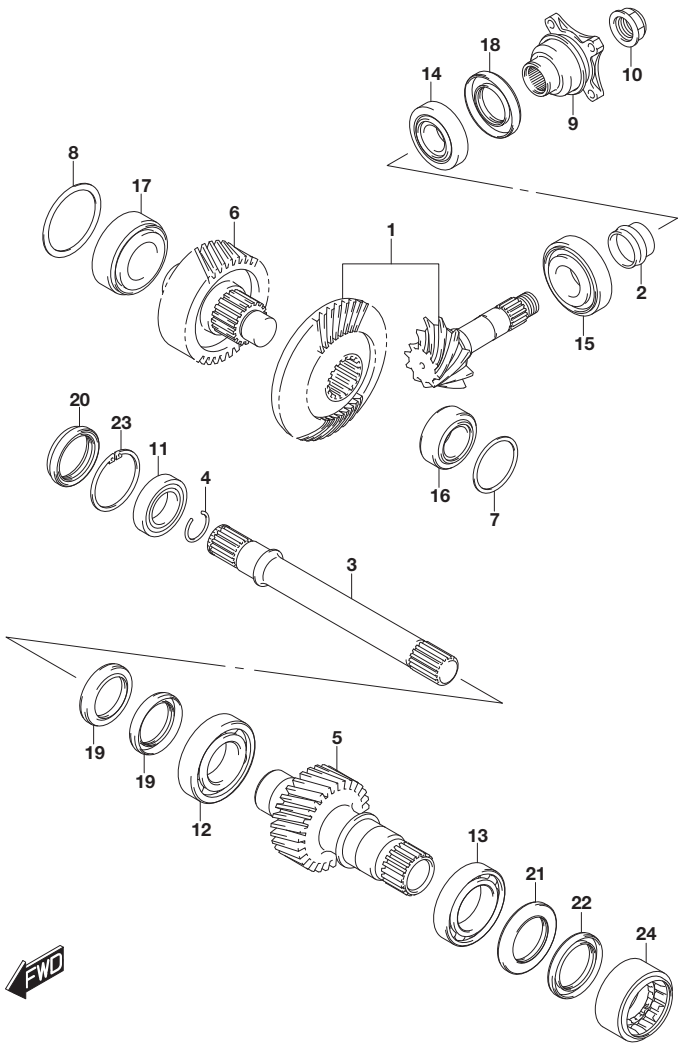

FIG.291A (2-C-4) TRANSFER GEAR (4WD)

REF NO.	PART NO.	DESCRIPTION	Q'TY	REMARKS
13-1	09262-50006	BEARING (50X80X12)	1	5MT,6MT
13-2	09262-50002	BEARING (50X80X16)	1	6AT
14	09265-25039	BEARING (25X62X18.25)	1	
15	09265-30018	BEARING (30X72X20.75)	1	
16	09265-30023	BEARING (30X55X20)	1	
17	09265-35014	BEARING (35X72X28.75)	1	
18	09283-35061	OIL SEAL (35X62X14)	1	
19	09283-40038	OIL SEAL (40X58X9.8)	2	
20	09283-42021	OIL SEAL (42X55X7)	1	
21-1	09283-50014	OIL SEAL (44X60X10)	1	5MT,6MT
21-2	09283-50012	OIL SEAL (50X68X7)	1	6AT
22-1	09283-50014	OIL SEAL (44X60X10)	1	5MT,6MT
22-2	09283-50011	OIL SEAL (50X62X7)	1	6AT
23	08331-41559	CIRCLIP	1	
24	29670-61M10	DAMPER, T/F GEAR	1	5MT,6MT

FIG.298A

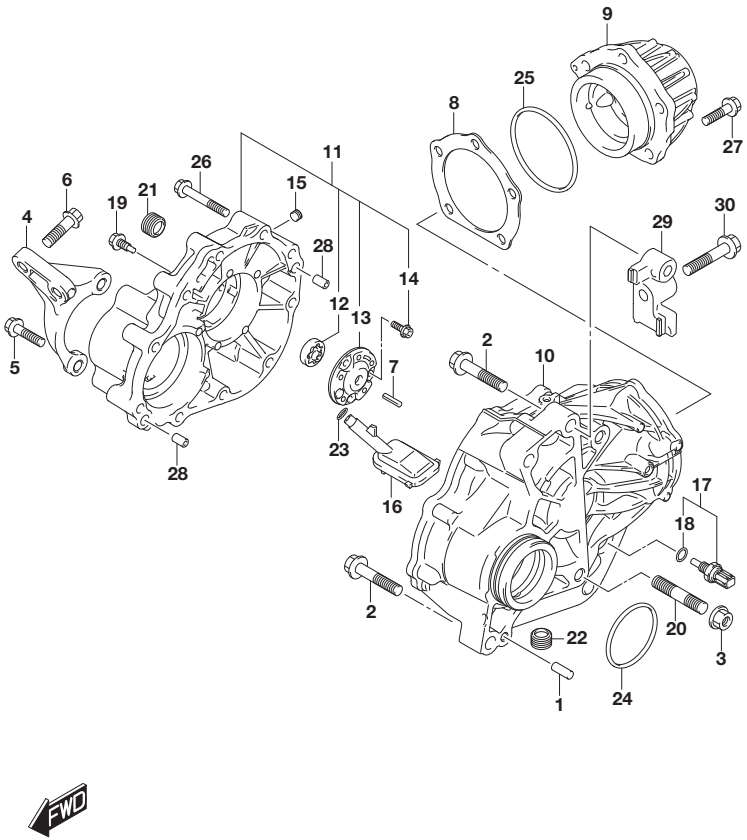

FIG.298A (2-C-5) TRANSFER CASE (4WD)

REF NO.	PART NO.	DESCRIPTION	Q'TY	REMARKS
1	09202-08004	PIN (8X23)	1	
2	01550-1255C	BOLT	3	
3	08316-1012C	NUT	1	
4-1	24792-56P00	STIFFENER, ENG & T/F	1	6MT
4-2	24792-56P10	STIFFENER, ENG & T/F	1	6AT:K14C
5	01550-1035C	BOLT	2	K14C,K14D
6	01550-1035C	BOLT	2	K14C,K14D
7	29152-57L00	PIN, OIL PUMP DRIVE	1	
8-1	29261-57L00-030	SHIM, T/F RETAINER (T:0.30)	AR	
8-2	29261-57L00-185	SHIM, T/F RETAINER (T:1.85)	AR	
8-3	29261-57L00-188	SHIM, T/F RETAINER (T:1.88)	AR	
8-4	29261-57L00-191	SHIM, T/F RETAINER (T:1.91)	AR	
8-5	29261-57L00-194	SHIM, T/F RETAINER (T:1.94)	AR	
8-6	29261-57L00-197	SHIM, T/F RETAINER (T:1.97)	AR	
8-7	29261-57L00-200	SHIM, T/F RETAINER (T:2.00)	AR	
8-8	29261-57L00-203	SHIM, T/F RETAINER (T:2.03)	AR	
8-9	29261-57L00-206	SHIM, T/F RETAINER (T:2.06)	AR	
8-10	29261-57L00-209	SHIM, T/F RETAINER (T:2.09)	AR	
8-11	29261-57L00-212	SHIM, T/F RETAINER (T:2.12)	AR	
8-12	29261-57L00-215	SHIM, T/F RETAINER (T:2.15)	AR	
9	29271-57L00	RETAINER, T/F OUTPUT	1	
10-1	29511-61M20	CASE, TRANSFER LH	1	5MT,6MT
10-2	29511-61M10	CASE, TRANSFER LH	1	6AT
11	29520-61M00	CASE ASSY, TRANSFER RH	1	
12	29610-57L00	.ROTOR ASSY, OIL PUMP	1	
13	29613-57L00	.COVER, T/F OIL PUMP	1	
14	09106-06099	.BOLT (6X16)	3	
15	09246-05006	.PLUG (1/8PT,H:8)	1	
16	29615-57L00	STRAINER ASSY, OIL	1	
17	29620-57L00	SENSOR ASSY, T/F OIL TEMP	1	
18	29622-57L00	.O RING, T/F OIL TEMP SNSR	1	
19	09103-08384	BOLT (8X18.4)	1	
20	09108-12018	STUD BOLT	1	
21	09246-16010	PLUG (L:15)	1	
22	09246-16010	PLUG (L:15)	1	
23	09280-10009	O RING (D:1.3,ID:9.8)	1	

FIG.298A

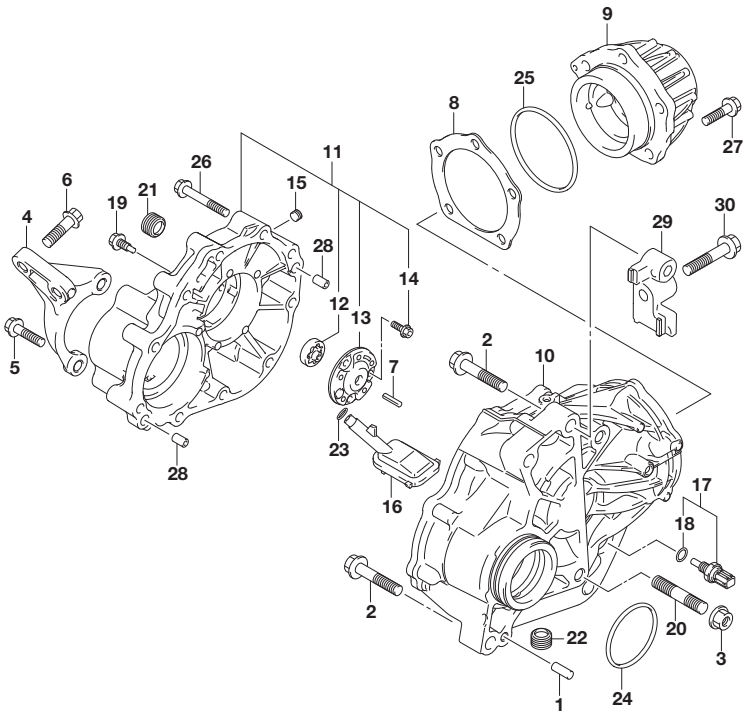

FIG.298A (2-C-6) TRANSFER CASE (4WD)

REF NO.	PART NO.	DESCRIPTION	Q'TY	REMARKS
24	09280-71009	O RING (D:2.4,ID:69.2)	1	
25	09280-86002	O RING (D:3.1,ID:84.4)	1	
26	01550-0855C	BOLT	10	
27	01550-1035C	BOLT	5	
28	04211-09149	PIN	2	
29	29531-54P10	STIFFENER, T/M & T/F	1	6AT
30	01550-1255A	BOLT	1	6AT

FIG.300A

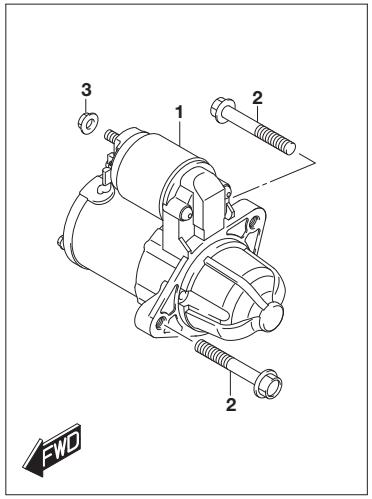

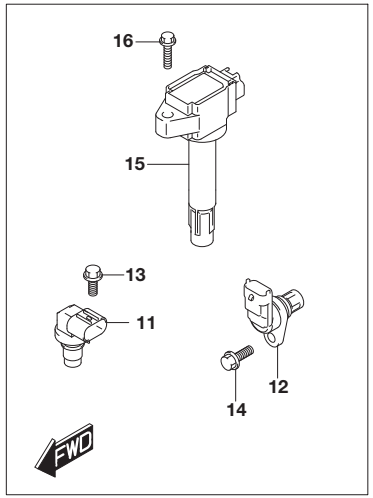

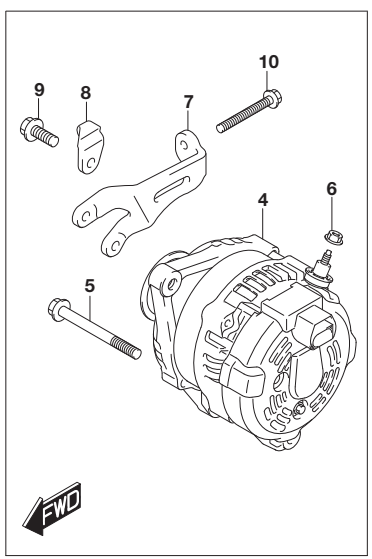

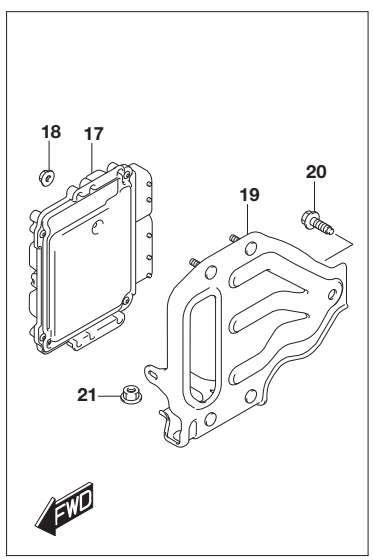

FIG.300A (2-C-7) ENGINE ELECTRICAL (K10C,K14C)

REF NO.	PART NO.	DESCRIPTION	Q'TY	REMARKS
1	31100-61MA0	MOTOR ASSY, STARTING	1	
2	01550-1060A	BOLT	2	
3	08316-1008A	NUT	1	
4-1	31400-60R10	GENERATOR ASSY	1	K10C
4-2	31400-60R01	GENERATOR ASSY	1	K14C
5	01550-1085A	BOLT	1	
6	08316-1008A	NUT	1	
7	11561-68M00	ARM, GEN BELT ADJ	1	
8	11562-68M10	ADJUSTER, GEN BELT	1	
9	17545-50M00	BOLT, BELT TENSIONER	1	
10	11563-68M00	BOLT, GENERATOR ADJUSTING	1	
11	33220-68M00	SENSOR ASSY, POSN	1	CRANK
12	33220-86P00	SENSOR ASSY, POSN	1	CAM
13	09103-06283	BOLT (6X16)	1	
14	01550-0616A	BOLT	1	
15-1	33400-60R00	COIL ASSY, IGNITION	3	K10C
15-2	33400-60R00	COIL ASSY, IGNITION	4	K14C
16-1	01560-0625B	BOLT	3	K10C
16-2	01560-0625B	BOLT	4	K14C
17-1	33910-53S00	BASE ASSY, EPI CONT	1	K10C
17-2	33910-60R00	BASE ASSY, EPI CONT	1	K14C:TYPE 3
17-3	33910-53S00	BASE ASSY, EPI CONT	1	K14C:TYPE 4
18	09159-06107	NUT	4	
19	33924-86P00	BRACKET, EPI CONT	1	
20	09135-06027	BOLT (6X16)	1	
21	09159-06107	NUT	2	

FIG.300B

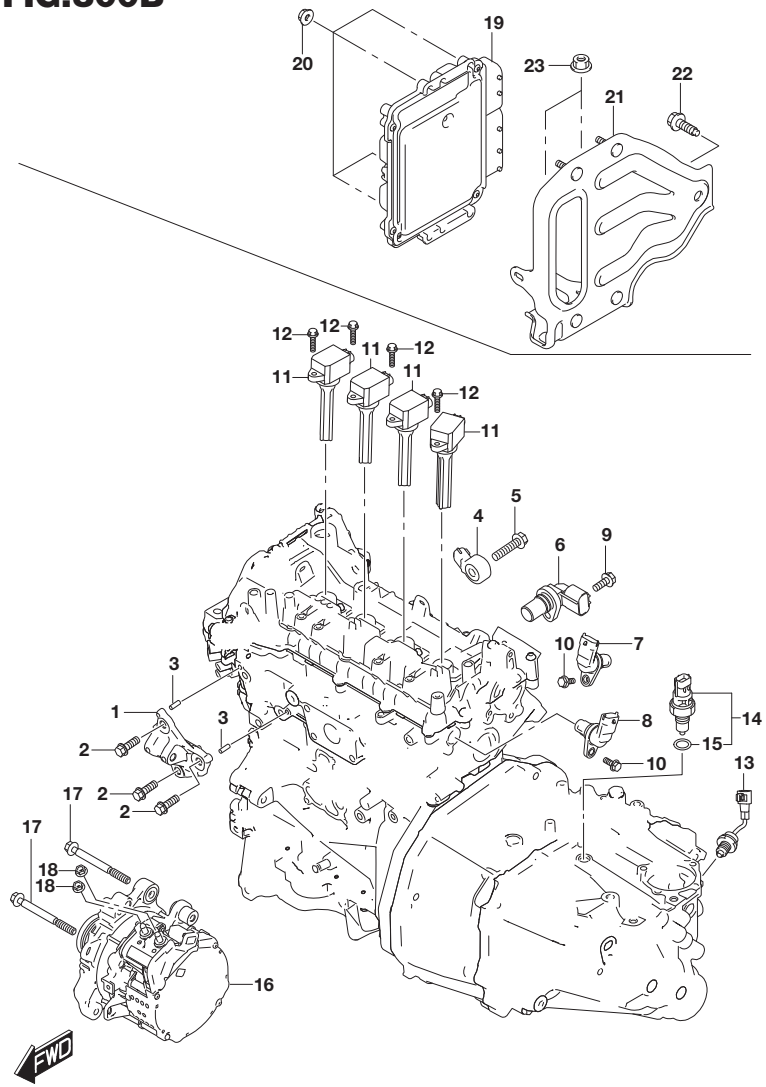

FIG.300B (2-C-8) ENGINE ELECTRICAL (K14D)

REF NO.	PART NO.	DESCRIPTION	Q'TY	REMARKS
1	11551-53S00	BRACKET, ISG	1	
2	01550-1030A	BOLT	3	
3	04221-06189	PIN	2	
4	18640-53S00	SENSOR ASSY, KNOCK	1	
5	01550-0835A	BOLT	1	
6	33220-64L20	SENSOR ASSY, POSN	1	
7	33220-86P00	SENSOR ASSY, POSN	1	
8	33220-86P00	SENSOR ASSY, POSN	1	
9	09103-06283	BOLT (6X16)	1	
10	01550-0616A	BOLT	2	
11	33400-74S00	COIL ASSY, IGNITION	4	
12	01560-0625B	BOLT	4	
13	37710-71M01	SWITCH ASSY, NEUTRAL	1	
14	37610-76G10	SWITCH ASSY, BACK UP	1	
15	09280-11002	.O RING (D:1.9,ID:11.4)	1	
16	96160-74S00	ISG ASSY	1	
17	96162-74S00	BOLT, INSULATING	2	
18	08316-1008A	NUT	2	
19	33910-74S00	BASE ASSY, EPI CONT	1	
20	09159-06107	NUT	4	
21	33924-86P00	BRACKET, EPI CONT	1	
22	09135-06027	BOLT (6X16)	1	
23	09159-06107	NUT	2	

FIG.302A

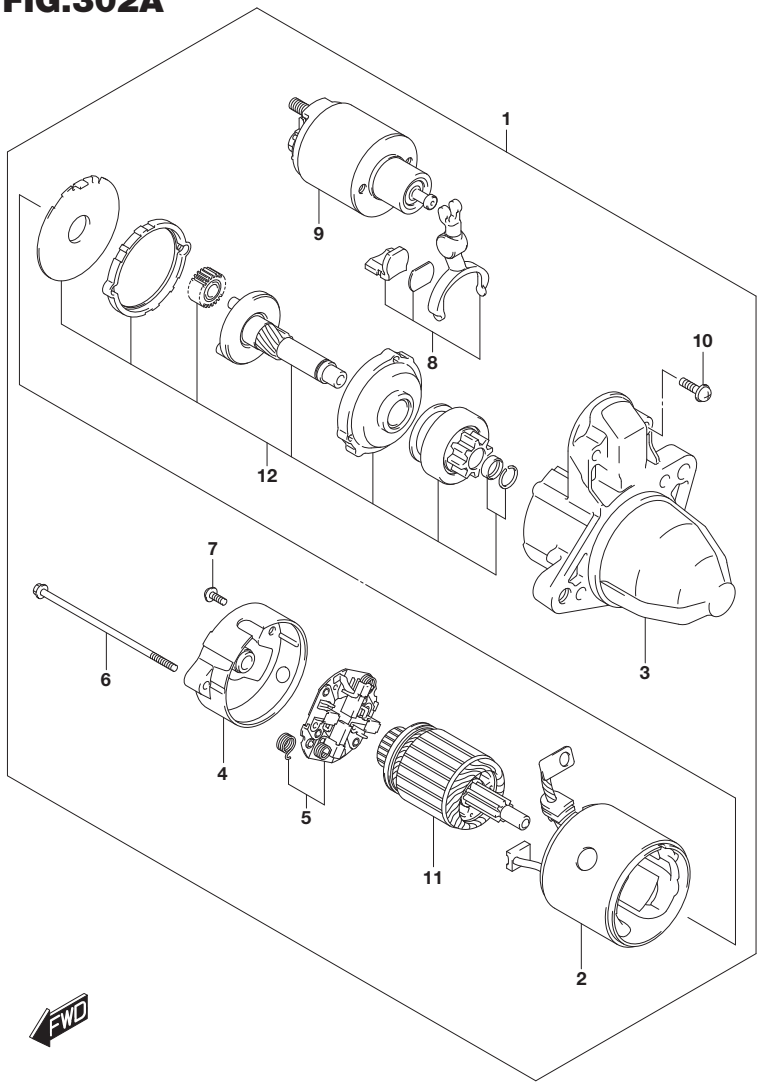

FIG.302A (2-C-9) STARTING MOTOR (K10C,K14C)

REF NO.	PART NO.	DESCRIPTION	Q'TY	REMARKS
1	31100-61MA0	MOTOR ASSY, STARTING	1	
2	31110-61MA0	.YOKE ASSY, STARTING MOTOR	1	
3	31150-61MA0	.HOUSING ASSY, DRIVE	1	
4	31170-61MA0	.FRAME ASSY, COMMUTATOR END	1	
5	31173-61MA0	.HOLDER ASSY, BRUSH	1	
6	31174-61MA0	.BOLT, COMMUTATOR END	2	
7	31175-61MA0	.SCREW, BRUSH HOLDER	2	
8	31190-61MA0	.LEVER ASSY, PINION DRIVE	1	
9	31220-61MA0	.SWITCH ASSY, STARTING MOTOR	1	
10	31221-61MA0	.BOLT, STARTING MOTOR SWITCH	2	
11	31311-61MA0	.ARMATURE, STARTING MOTOR	1	
12	31340-61MA0	.SHAFT ASSY	1	

FIG.302B

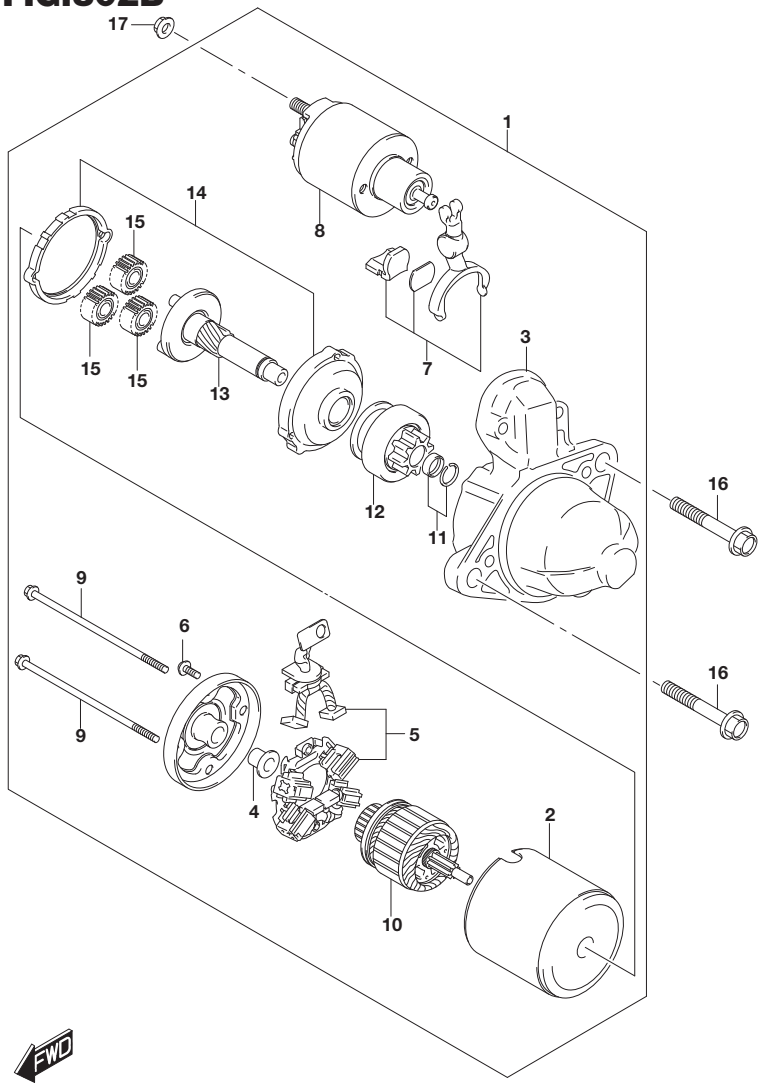

FIG.302B (2-C-10) STARTING MOTOR (K14D)

REF NO.	PART NO.	DESCRIPTION	Q'TY	REMARKS
1	31100-74S00	MOTOR ASSY, STARTING	1	
2	31110-77R00	.YOKE ASSY	1	
3	31150-73S00	.HOUSING	1	
4	31172-64B60	.BEARING, REAR	1	
5	31173-73S00	.HOLDER ASSY, BRUSH	1	
6	31175-79030	.SCREW SET	1	
7	31191-63J00	.LEVER ASSY	1	
8	31220-73S00	.SWITCH ASSY	1	
9	31261-51K20	.BOLT	2	
10	31311-77M01	.ARMATURE	1	
11	31314-86030	.STOPPER SET	1	
12	31320-73S00	.CLUTCH ASSY	1	
13	31341-63J00	.SHAFT ASSY, GEAR	1	
14	31343-63J00	.INTERNAL GEAR	1	
15	31344-63J00	.GEAR ASSY	3	
16	01550-1060A	BOLT	2	
17	08316-1008A	NUT	1	

FIG.304A

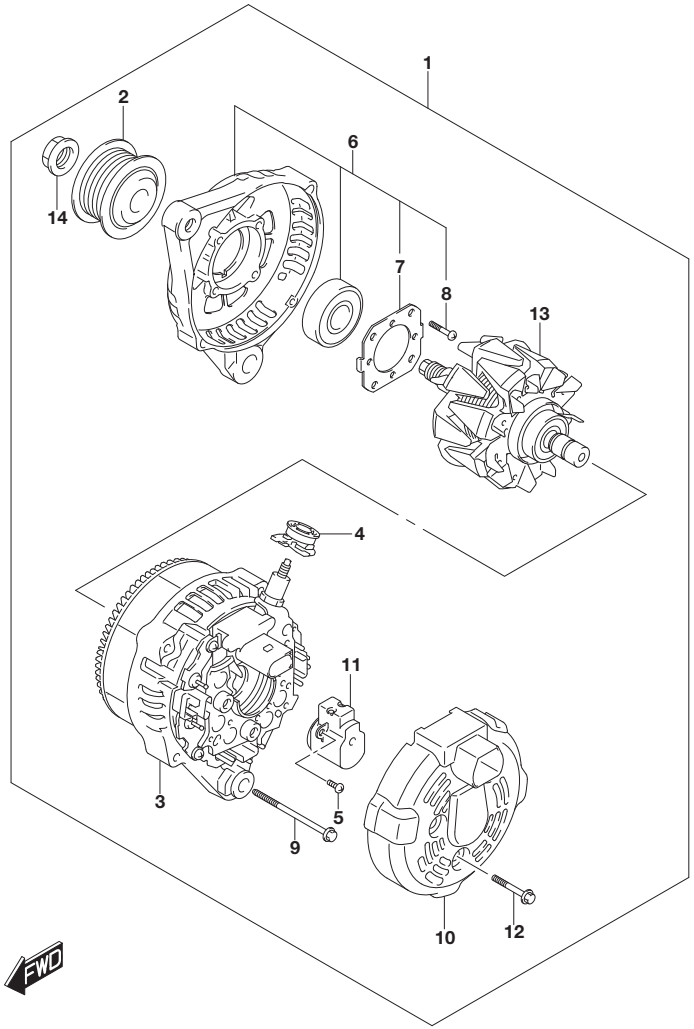

FIG.304A (2-C-11) GENERATOR (K10C,K14C)

REF NO.	PART NO.	DESCRIPTION	Q'TY	REMARKS
1-1	31400-60R10	GENERATOR ASSY	1	K10C
1-2	31400-60R01	GENERATOR ASSY	1	K14C
2-1	31171-60R10	.PULLEY	1	K10C
2-2	31171-60R00	.PULLEY	1	K14C
3-1	31401-61M00	.COIL ASSY, ALTERNATOR	1	K10C
3-2	31401-60R00	.COIL ASSY, ALTERNATOR	1	K14C
4	31514-67J00	.TERMINAL	1	
5	31516-85250	.SCREW	3	
6	31580-60R10	.FRAME ASSY, DRIVE END	1	
7	31585-82111	..RETAINER, BEARING	1	
8	31586-73J00	..SCREW	4	
9	31587-72M00	.BOLT	4	
10	31614-61M00	.COVER	1	
11	31656-61J20	.HOLDER ASSY, BRUSH	1	
12	31692-72M00	.BOLT	3	
13	31710-61M00	.ROTOR ASSY	1	
14	31775-86510	.NUT	1	

FIG.318A

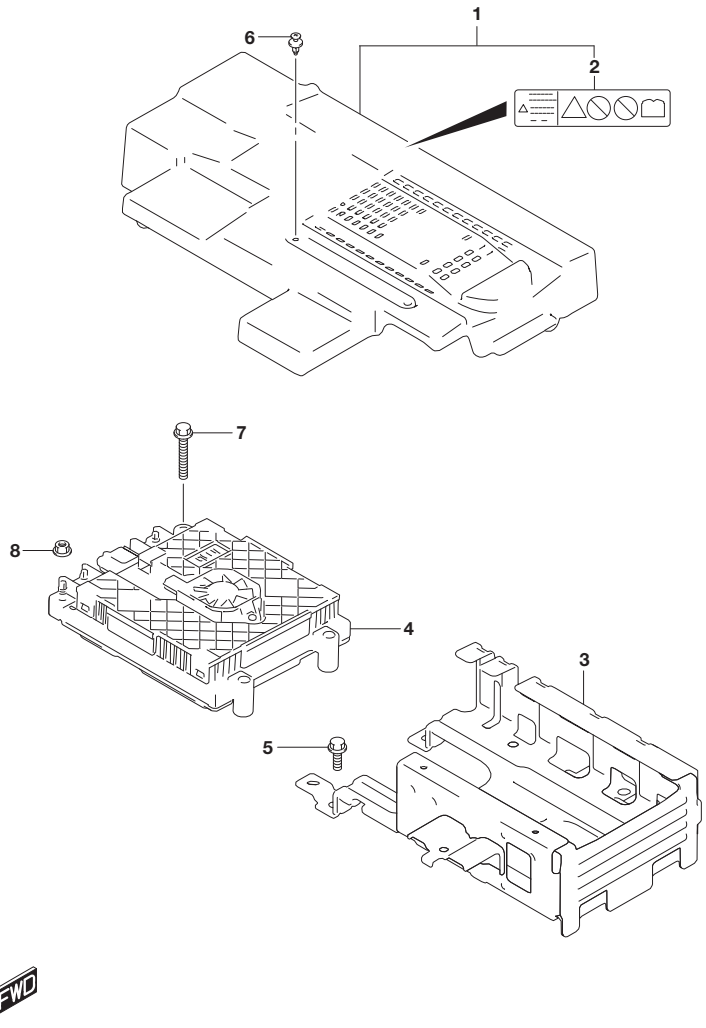

FIG.318A (2-C-12) ISG CONVERTER (K14D)

REF NO.	PART NO.	DESCRIPTION	Q'TY	REMARKS
1	918B0-74S00	COVER, CONVERTER	1	
2	918B1-74S00	.LABEL, CONVERTER COVER	1	
3	91880-74S00	BRACKET, CONVERTER	1	
4	96460-74S00	CONVERTER ASSY	1	
5	09115-08007	BOLT	4	
6	09409-06322	CLIP	2	
7	01550-0845A	BOLT	3	
8	08316-1008A	NUT	3	

FIG.320A

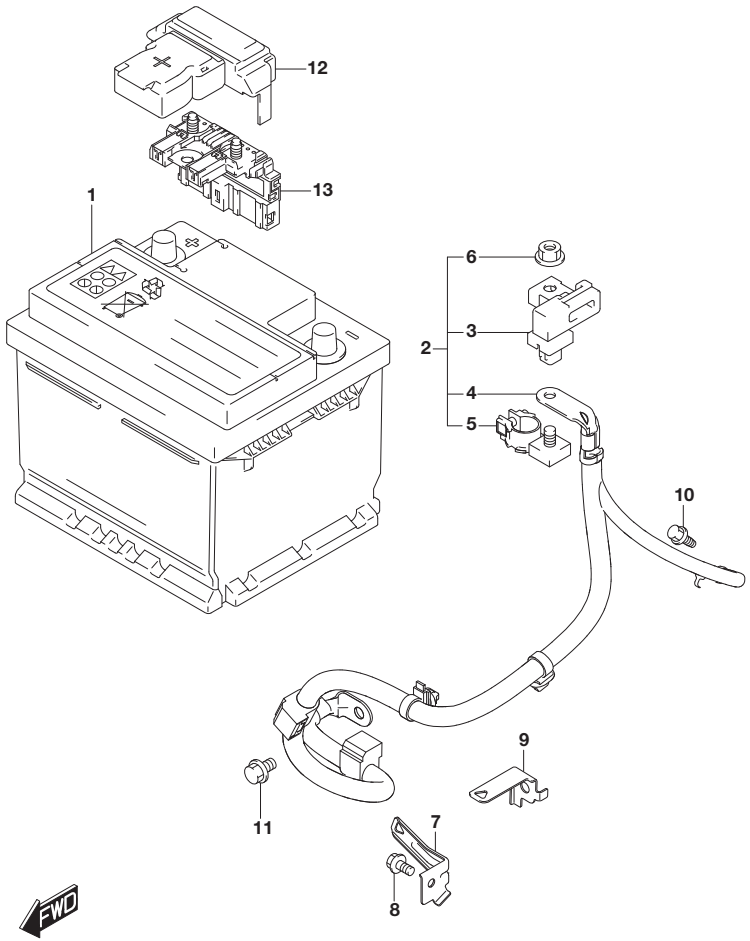

FIG.320A (2-C-13) BATTERY (5MT)

REF NO.	PART NO.	DESCRIPTION	Q'TY	REMARKS
1	33610-61MC0	BATTERY ASSY (12V60AH600A,EN)	1	
2	33880-64R00	CABLE SET, BTRY GND	1	
3	32810-74P00	.SENSOR ASSY, CURRENT	1	
4	33850-61M10	.CABLE, BATTERY GND	1	
5	33886-68L00	.TERMINAL	1	
6	33887-71L00	.NUT	1	
7	36653-61M00	BRACKET, BTRY CABLE BODY	1	
8	01551-0612C	BOLT	1	
9	33801-61M00	BRACKET, BATTERY CABLE	1	
10	09115-06005	BOLT (6X16)	1	
11	01550-0812A	BOLT	1	
12	36694-66M00	COVER, BTRY TERMINAL	1	
13	36739-61M00	FUSE, BATTERY	1	

FIG.320B(2-C-14) BATTERY (6MT:K14C)
FIG.320C(2-D-2) BATTERY (6MT:K14D)
FIG.320D(2-D-4) BATTERY (6AT)

FIG.320B

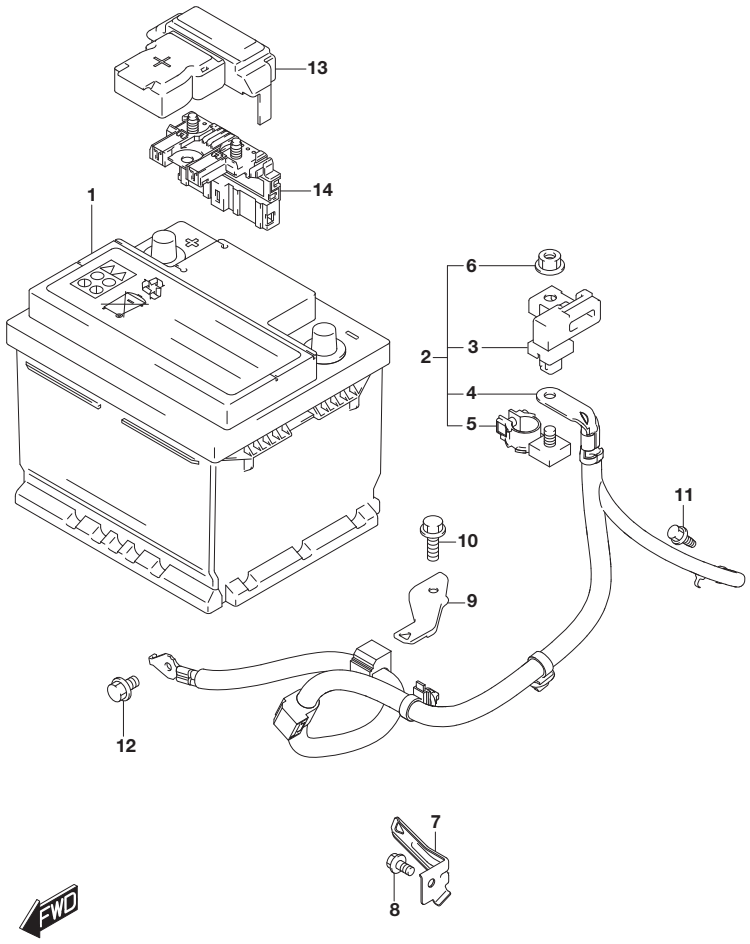

FIG.320B (2-C-14) BATTERY (6MT:K14C)

REF NO.	PART NO.	DESCRIPTION	Q'TY	REMARKS
1	33610-61MC0	BATTERY ASSY (12V60AH600A,EN)	1	
2	33880-64R20	CABLE SET, BTRY GND	1	
3	32810-74P00	.SENSOR ASSY, CURRENT	1	
4	33850-60R00	.CABLE, BTRY GND	1	
5	33886-68L00	.TERMINAL	1	
6	33887-71L00	.NUT	1	
7	36653-61M00	BRACKET, BTRY CABLE BODY	1	
8	01551-0612C	BOLT	1	
9	36651-60R10	BRACKET, ENG HARN AT	1	
10	01550-0612C	BOLT	1	
11	09115-06005	BOLT (6X16)	1	
12	01550-0612A	BOLT	1	
13	36694-66M00	COVER, BTRY TERMINAL	1	
14	36739-61M00	FUSE, BATTERY	1	

FIG.320C

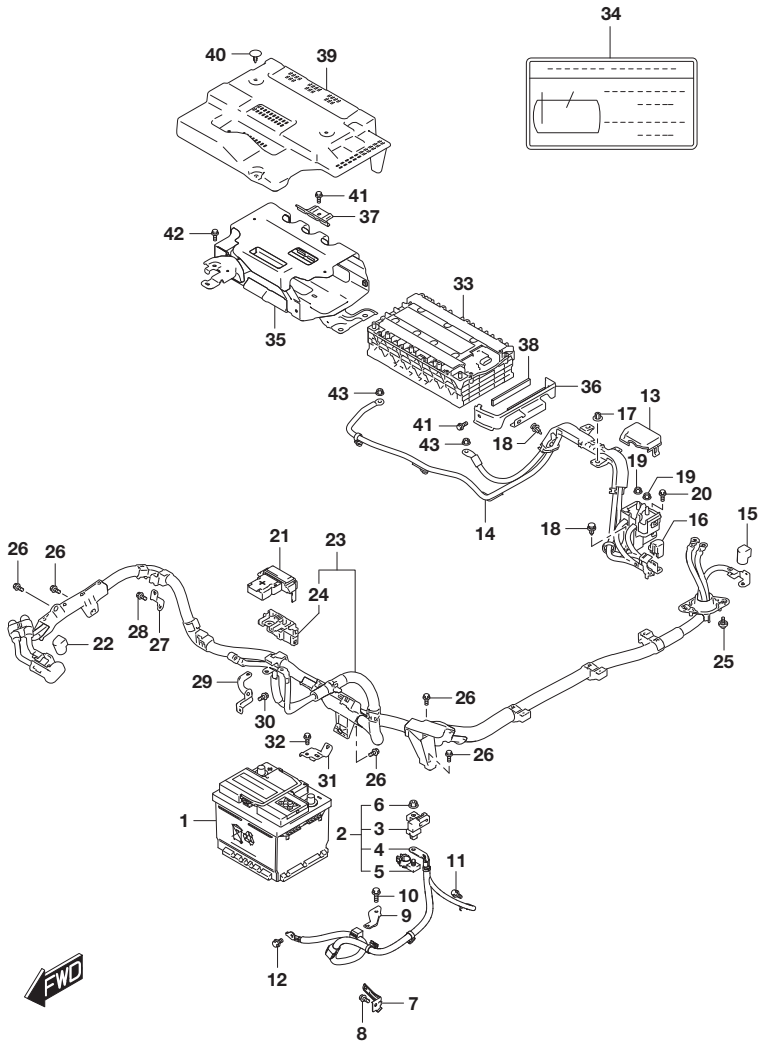

FIG.320C (2-D-2) BATTERY (6MT:K14D)

REF NO.	PART NO.	DESCRIPTION	Q'TY	REMARKS
1-1	33610-83E51	BATTERY ASSY (12V36AH300A,EN)	1	E2,E22
1-2	33610-83E61	BATTERY ASSY (12V44AH350A,EN)	1	E22
2	33880-64R20	CABLE SET, BTRY GND	1	
3	32810-74P00	.SENSOR ASSY, CURRENT	1	
4	33850-60R00	.CABLE, BTRY GND	1	
5	33886-68L00	.TERMINAL	1	
6	33887-71L00	.NUT	1	
7	36653-61M00	BRACKET, BTRY CABLE BODY	1	
8	01551-0612C	BOLT	1	
9	36651-60R10	BRACKET, ENG HARN AT	1	
10	01550-0612C	BOLT	1	
11	09115-06005	BOLT (6X16)	1	
12	01550-0612A	BOLT	1	
13	36744-74S00	COVER, TERMINAL BOX	1	
14	36810-74S00	WIRE, 48 V CABLE IN	1	
15	36997-74S00	COVER, DC/DC TERMINAL	1	
16	36997-74S10	COVER, MGU TERMINAL	1	
17	09148-05059	CLIP	1	
18	09409-08327	CLIP (7.8X20)	2	
19	08316-1008A	NUT	2	
20	02162-0616A	SCREW	1	
21	36694-66M00	COVER, BTRY TERMINAL	1	
22	36997-74S10	COVER, MGU TERMINAL	1	
23	36970-57T00	WIRE, 48 V CABLE OUT	1	
24	36739-74S00	.FUSE, BATTERY	1	
25	36998-74S00	BOLT, GROMMET	2	
26	01550-0616C	BOLT	5	
27	36653-74S20	BRACKET, ENG HARN	1	
28	01550-0612C	BOLT	1	
29	36653-74S40	BRACKET, ENG HARN	1	
30	01550-0612C	BOLT	1	
31	36653-74S50	BRACKET, ENG HARN	1	
32	01550-0612C	BOLT	1	
33	96520-74SV0	PACK ASSY, BATTERY	1	
34	96691-74S00	LABEL, BTRY INFORMATION	1	
35	96730-74S00	HOLDER, BATTERY	1	

FIG.320C

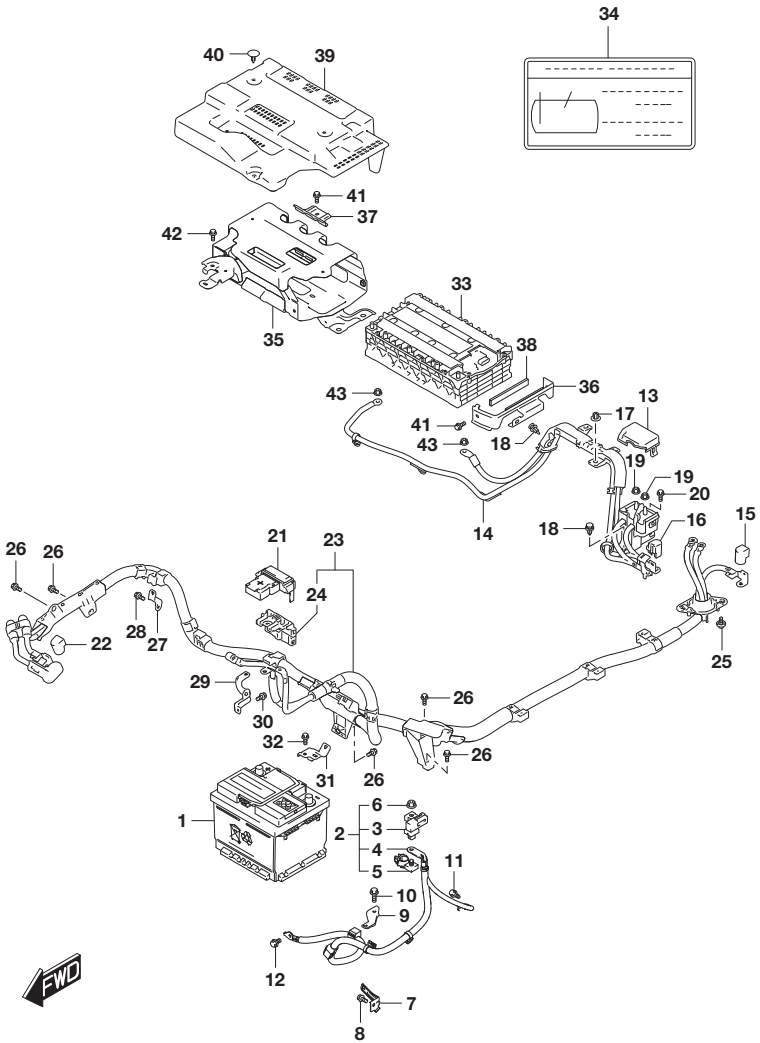

FIG.320C (2-D-3) BATTERY (6MT:K14D)

REF NO.	PART NO.	DESCRIPTION	Q'TY	REMARKS
36	96741-74S00	BRACKET, BTRY NO.1	1	
37	96742-74S00	BRACKET, BTRY NO.2	1	
38	96743-74S00	CUSHION, BRKT LH	1	
39	96761-74S00	COVER, BTRY PACK	1	
40	09409-06326-5PK	CLIP (BLACK)	4	
41	01550-0612A	BOLT	3	
42	01550-0812A	BOLT	4	
43	08316-1008A	NUT	2	

FIG.320D

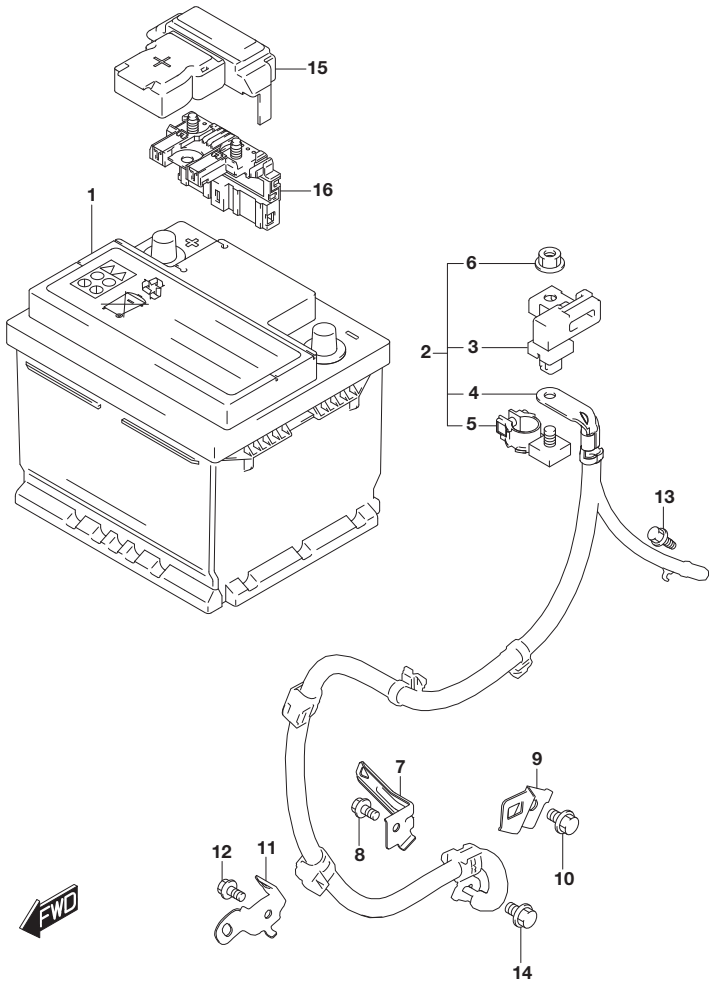

FIG.320D (2-D-4) BATTERY (6AT)

REF NO.	PART NO.	DESCRIPTION	Q'TY	REMARKS
1	33610-61MC0	BATTERY ASSY (12V60AH600A,EN)	1	
2	33880-64R30	CABLE SET, BTRY GND	1	
3	32810-74P00	.SENSOR ASSY, CURRENT	1	
4	33850-54PB0	.CABLE, BTRY GND	1	
5	33886-68L00	.TERMINAL	1	
6	33887-71L00	.NUT	1	
7	36653-61M00	BRACKET, BTRY CABLE BODY	1	
8	01551-0612C	BOLT	1	
9	33801-54P00	BRACKET, BTRY GND	1	
10	01550-0812A	BOLT	1	
11	36653-54P00	BRACKET, BTRY GND	1	
12	01551-0612C	BOLT	1	
13	09115-06005	BOLT (6X16)	1	
14	01550-0812A	BOLT	1	
15	36694-66M00	COVER, BTRY TERMINAL	1	
16	36739-61M00	FUSE, BATTERY	1	

FIG.324A

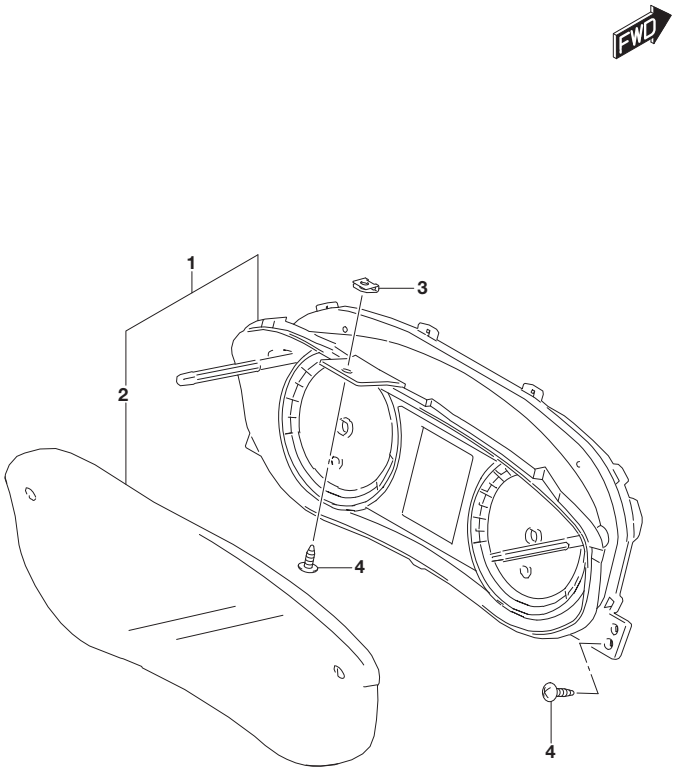

FIG.324A (2-D-5) SPEEDOMETER (LHD:K10C)

REF NO.	PART NO.	DESCRIPTION	Q'TY	REMARKS
1-1	34200-60R10	SPEEDOMETER ASSY, COMB (KILO)	1	5MT:2WD:GL:N/CRUISE CONTROL
1-2	34200-53SB0	SPEEDOMETER ASSY, COMB (KILO)	1	5MT:2WD:GL:W/CRUISE CONTROL
1-3	34200-53SA0	SPEEDOMETER ASSY, COMB (KILO)	1	5MT:2WD:GLX
1-4	34200-60R30	SPEEDOMETER ASSY, COMB (KILO)	1	5MT:4WD:GL:N/CRUISE CONTROL
1-5	34200-53SC0	SPEEDOMETER ASSY, COMB (KILO)	1	5MT:4WD:GL:W/CRUISE CONTROL
1-6	34200-53SC0	SPEEDOMETER ASSY, COMB (KILO)	1	5MT:4WD:GLX
1-7	34200-53SF0	SPEEDOMETER ASSY, COMB (KILO)	1	6AT:2WD:GL
1-8	34200-53SE0	SPEEDOMETER ASSY, COMB (KILO)	1	6AT:2WD:GLX
1-9	34200-53SG0	SPEEDOMETER ASSY, COMB (KILO)	1	6AT:4WD
2	34112-54P00	.GLASS, METER WINDOW	1	
3	09148-05045	NUT	1	
4	03541-0516A	SCREW	3	

FIG.324B(2-D-6) SPEEDOMETER (LHD:K14C)
FIG.324C(2-D-7) SPEEDOMETER (LHD:K14D)
FIG.324D(2-D-8) SPEEDOMETER (RHD:K10C)
FIG.324E(2-D-9) SPEEDOMETER (RHD:K14C)
FIG.324F(2-D-11) SPEEDOMETER (RHD:K14D)

FIG.324B

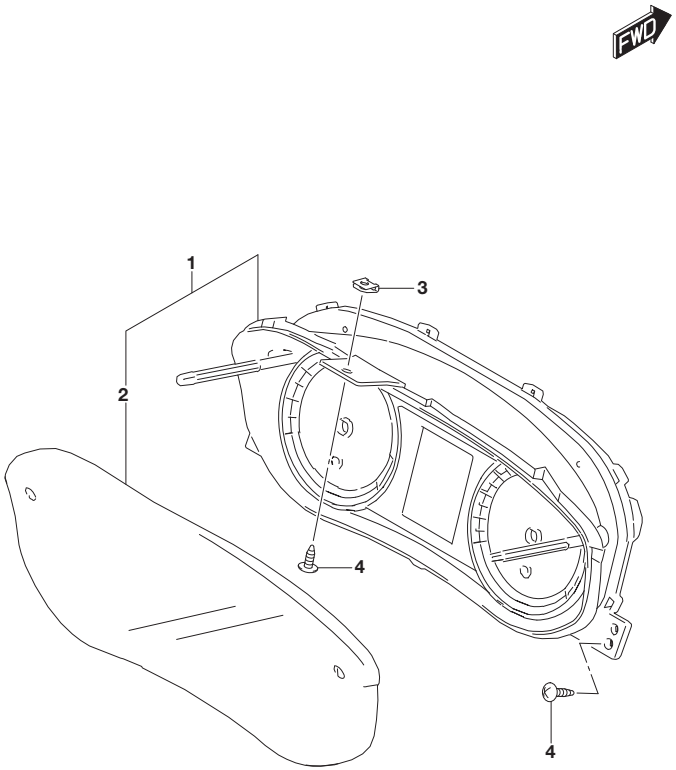

FIG.324B (2-D-6) SPEEDOMETER (LHD:K14C)

REF NO.	PART NO.	DESCRIPTION	Q'TY	REMARKS
1-1	34100-53SB0	SPEEDOMETER ASSY, COMB (KILO)	1	TYPE 3:6MT:2WD:GL
1-2	34100-53SA0	SPEEDOMETER ASSY, COMB (KILO)	1	TYPE 3:6MT:2WD:GLX
1-3	34100-53SC0	SPEEDOMETER ASSY, COMB (KILO)	1	TYPE 3:6MT:4WD
1-4	34100-53SF0	SPEEDOMETER ASSY, COMB (KILO)	1	TYPE 3:6AT:2WD:GL
1-5	34100-53SE0	SPEEDOMETER ASSY, COMB (KILO)	1	TYPE 3:6AT:2WD:GLX
1-6	34100-53SG0	SPEEDOMETER ASSY, COMB (KILO)	1	TYPE 3:6AT:4WD
1-7	34200-53SB0	SPEEDOMETER ASSY, COMB (KILO)	1	TYPE 4:6MT:2WD:GL
1-8	34200-53SA0	SPEEDOMETER ASSY, COMB (KILO)	1	TYPE 4:6MT:2WD:GLX
1-9	34200-53SC0	SPEEDOMETER ASSY, COMB (KILO)	1	TYPE 4:6MT:4WD
1-10	34200-53SF0	SPEEDOMETER ASSY, COMB (KILO)	1	TYPE 4:6AT:2WD:GL
1-11	34200-53SE0	SPEEDOMETER ASSY, COMB (KILO)	1	TYPE 4:6AT:2WD:GLX
1-12	34200-53SG0	SPEEDOMETER ASSY, COMB (KILO)	1	TYPE 4:6AT:4WD
2	34112-54P00	.GLASS, METER WINDOW	1	
3	09148-05045	NUT	1	
4	03541-0516A	SCREW	3	

FIG.324C

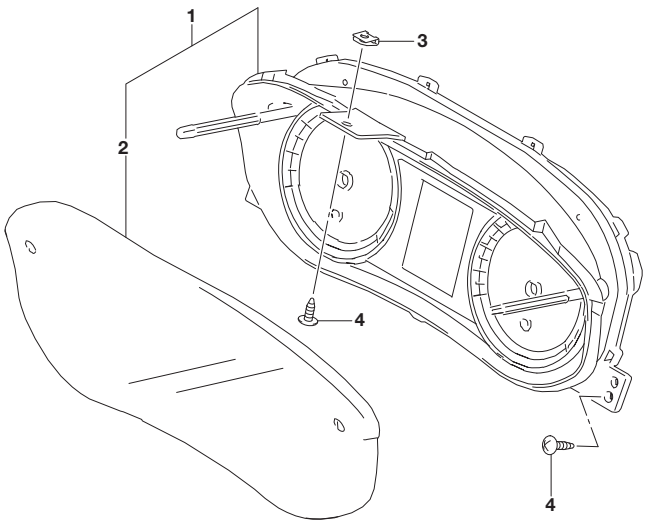

FIG.324C (2-D-7) SPEEDOMETER (LHD:K14D)

REF NO.	PART NO.	DESCRIPTION	Q'TY	REMARKS
1-1	34107-53SB0	SPEEDOMETER ASSY, COMB (KILO)	1	2WD:N/AEB CAMERA
1-2	34107-53SA0	SPEEDOMETER ASSY, COMB (KILO)	1	2WD:W/AEB MONAURAL CAMERA
1-3	34107-53SC0	SPEEDOMETER ASSY, COMB (KILO)	1	4WD
2	34112-54P00	.GLASS, METER WINDOW	1	
3	09148-05045	NUT	1	
4	03541-0516A	SCREW	3	

FIG.324D

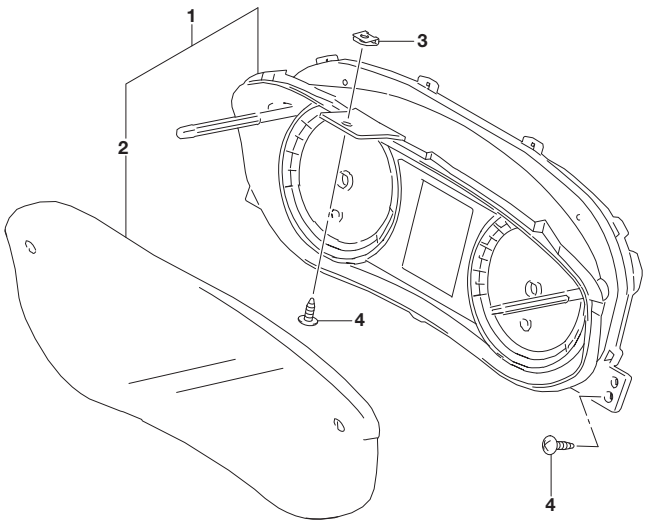

FIG.324D (2-D-8) SPEEDOMETER (RHD:K10C)

REF NO.	PART NO.	DESCRIPTION	Q'TY	REMARKS
1-1	34200-60R90	SPEEDOMETER ASSY, COMB (KILO)	1	5MT:2WD:GL:N/CRUISE CONTROL
1-2	34200-60RH0	SPEEDOMETER ASSY, COMB (MILE/KILO)	1	5MT:2WD:GL:N/CRUISE CONTROL
1-3	34200-53SK0	SPEEDOMETER ASSY, COMB (KILO)	1	5MT:2WD:GL:W/CRUISE CONTROL
1-4	34200-53SU0	SPEEDOMETER ASSY, COMB (MILE/KILO)	1	5MT:2WD:GL:W/CRUISE CONTROL
1-5	34200-53SJ0	SPEEDOMETER ASSY, COMB (KILO)	1	5MT:2WD:GLX
1-6	34200-53SS0	SPEEDOMETER ASSY, COMB (MILE/KILO)	1	5MT:2WD:GLX
1-7	34200-53SL0	SPEEDOMETER ASSY, COMB (KILO)	1	5MT:4WD
1-8	34201-53SA0	SPEEDOMETER ASSY, COMB (MILE/KILO)	1	5MT:4WD
1-9	34200-53SP0	SPEEDOMETER ASSY, COMB (KILO)	1	6AT:2WD:GL
1-10	34201-53SD0	SPEEDOMETER ASSY, COMB (MILE/KILO)	1	6AT:2WD:GL
1-11	34200-53SN0	SPEEDOMETER ASSY, COMB (KILO)	1	6AT:2WD:GLX
1-12	34201-53SC0	SPEEDOMETER ASSY, COMB (MILE/KILO)	1	6AT:2WD:GLX
1-13	34200-53SQ0	SPEEDOMETER ASSY, COMB (KILO)	1	6AT:4WD
1-14	34201-53SE0	SPEEDOMETER ASSY, COMB (MILE/KILO)	1	6AT:4WD
2	34112-54P00	.GLASS, METER WINDOW	1	
3	09148-05045	NUT	1	
4	03541-0516A	SCREW	3	

FIG.324E

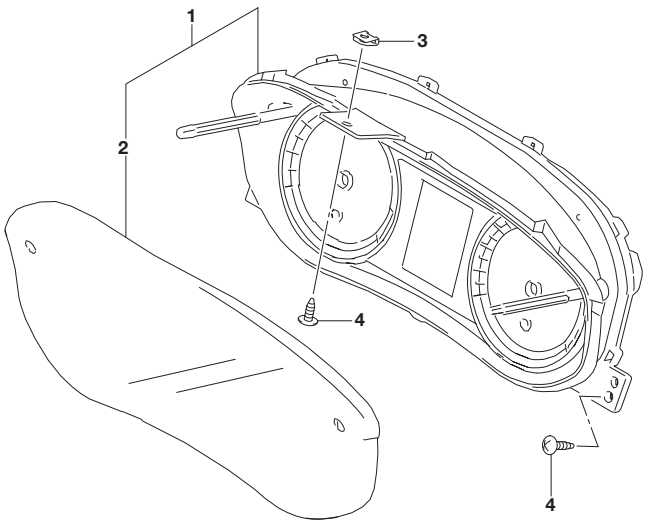

FIG.324E (2-D-9) SPEEDOMETER (RHD:K14C)

REF NO.	PART NO.	DESCRIPTION	Q'TY	REMARKS
1-1	34100-53SK0	SPEEDOMETER ASSY, COMB (KILO)	1	TYPE 3:6MT:2WD:GL
1-2	34100-53SU0	SPEEDOMETER ASSY, COMB (MILE/KILO)	1	TYPE 3:6MT:2WD:GL
1-3	34100-53SJ0	SPEEDOMETER ASSY, COMB (KILO)	1	TYPE 3:6MT:2WD:GLX
1-4	34100-53SS0	SPEEDOMETER ASSY, COMB (MILE/KILO)	1	TYPE 3:6MT:2WD:GLX
1-5	34100-53SL0	SPEEDOMETER ASSY, COMB (KILO)	1	TYPE 3:6MT:4WD
1-6	34101-53SA0	SPEEDOMETER ASSY, COMB (MILE/KILO)	1	TYPE 3:6MT:4WD
1-7	34100-53SP0	SPEEDOMETER ASSY, COMB (KILO)	1	TYPE 3:6AT:2WD:GL
1-8	34101-53SD0	SPEEDOMETER ASSY, COMB (MILE/KILO)	1	TYPE 3:6AT:2WD:GL
1-9	34100-53SN0	SPEEDOMETER ASSY, COMB (KILO)	1	TYPE 3:6AT:2WD:GLX
1-10	34101-53SC0	SPEEDOMETER ASSY, COMB (MILE/KILO)	1	TYPE 3:6AT:2WD:GLX
1-11	34100-53SQ0	SPEEDOMETER ASSY, COMB (KILO)	1	TYPE 3:6AT:4WD
1-12	34101-53SE0	SPEEDOMETER ASSY, COMB (MILE/KILO)	1	TYPE 3:6AT:4WD
1-13	34200-53SK0	SPEEDOMETER ASSY, COMB (KILO)	1	TYPE 4:6MT:2WD:GL
1-14	34200-53SU0	SPEEDOMETER ASSY, COMB (MILE/KILO)	1	TYPE 4:6MT:2WD:GL
1-15	34200-53SJ0	SPEEDOMETER ASSY, COMB (KILO)	1	TYPE 4:6MT:2WD:GLX
1-16	34200-53SS0	SPEEDOMETER ASSY, COMB (MILE/KILO)	1	TYPE 4:6MT:2WD:GLX
1-17	34200-53SL0	SPEEDOMETER ASSY, COMB (KILO)	1	TYPE 4:6MT:4WD
1-18	34201-53SA0	SPEEDOMETER ASSY, COMB (MILE/KILO)	1	TYPE 4:6MT:4WD
1-19	34200-53SP0	SPEEDOMETER ASSY, COMB (KILO)	1	TYPE 4:6AT:2WD:GL
1-20	34201-53SD0	SPEEDOMETER ASSY, COMB (MILE/KILO)	1	TYPE 4:6AT:2WD:GL
1-21	34200-53SN0	SPEEDOMETER ASSY, COMB (KILO)	1	TYPE 4:6AT:2WD:GLX
1-22	34201-53SC0	SPEEDOMETER ASSY, COMB (MILE/KILO)	1	TYPE 4:6AT:2WD:GLX
1-23	34200-53SQ0	SPEEDOMETER ASSY, COMB (KILO)	1	TYPE 4:6AT:4WD
1-24	34201-53SE0	SPEEDOMETER ASSY, COMB (MILE/KILO)	1	TYPE 4:6AT:4WD

FIG.324E

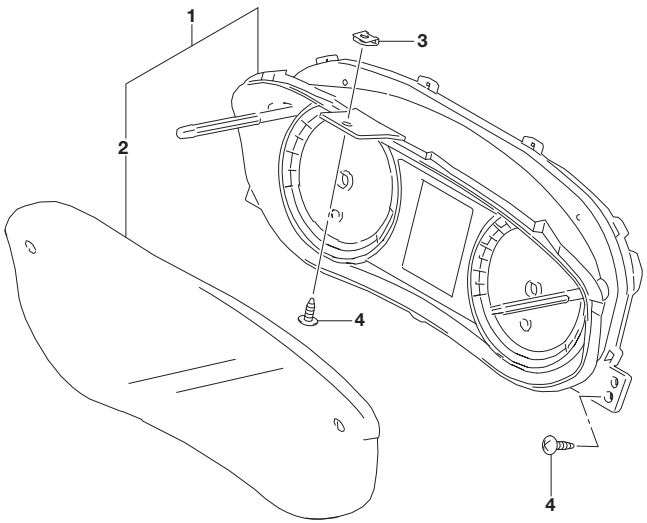

FIG.324E (2-D-10) SPEEDOMETER (RHD:K14C)

REF NO.	PART NO.	DESCRIPTION	Q'TY	REMARKS
2	34112-54P00	.GLASS, METER WINDOW	1	
3	09148-05045	NUT	1	
4	03541-0516A	SCREW	3	

FIG.324F

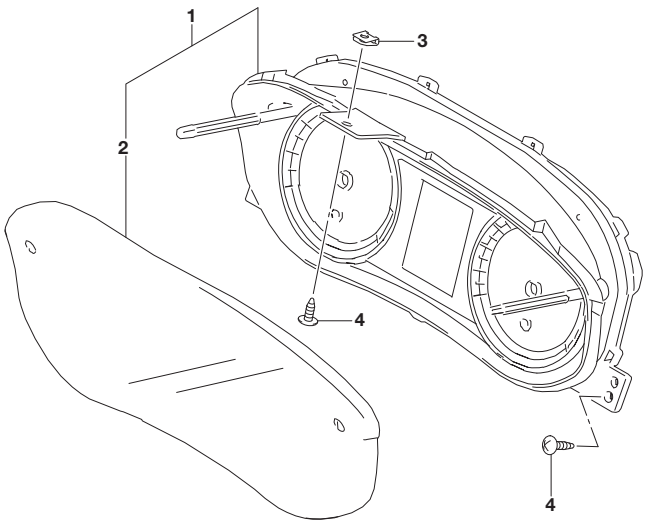

FIG.324F (2-D-11) SPEEDOMETER (RHD:K14D)

REF NO.	PART NO.	DESCRIPTION	Q'TY	REMARKS
1-1	34107-53SK0	SPEEDOMETER ASSY, COMB (KILO)	1	2WD:N/AEB CAMERA
1-2	34107-53SU0	SPEEDOMETER ASSY, COMB (MILE/KILO)	1	2WD:N/AEB CAMERA
1-3	34107-53SJ0	SPEEDOMETER ASSY, COMB (KILO)	1	2WD:W/AEB MONAURAL CAMERA
1-4	34107-53SS0	SPEEDOMETER ASSY, COMB (MILE/KILO)	1	2WD:W/AEB MONAURAL CAMERA
1-5	34107-53SL0	SPEEDOMETER ASSY, COMB (KILO)	1	4WD
1-6	34108-53SA0	SPEEDOMETER ASSY, COMB (MILE/KILO)	1	4WD
2	34112-54P00	.GLASS, METER WINDOW	1	
3	09148-05045	NUT	1	
4	03541-0516A	SCREW	3	

FIG.330A

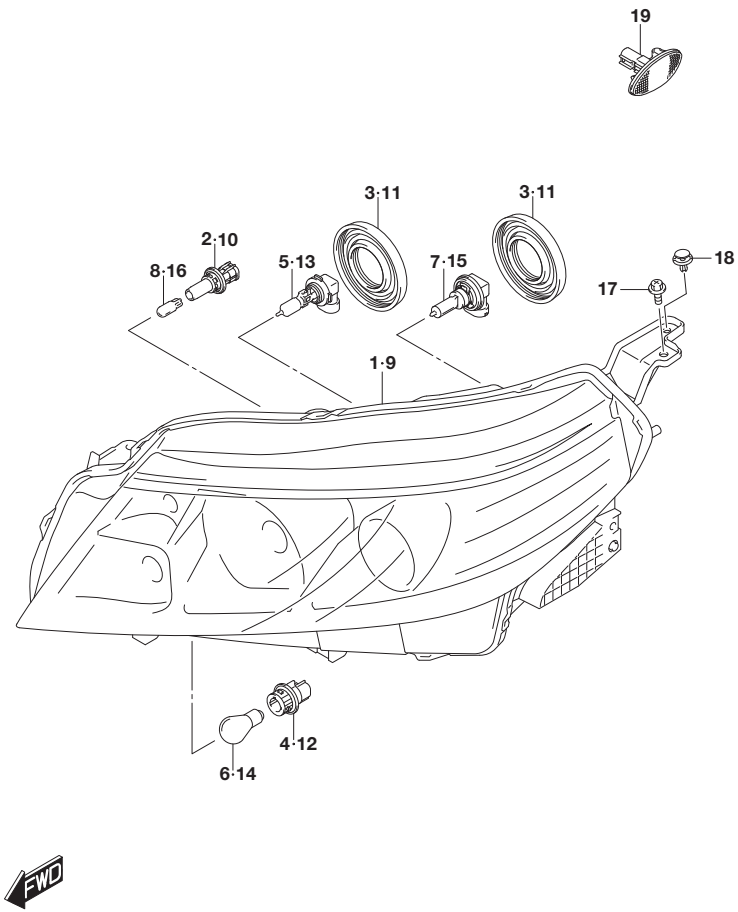

FIG.330A (2-D-12) HEADLAMP (W/HALOGEN HEADLAMP)

REF NO.	PART NO.	DESCRIPTION	Q'TY	REMARKS
1-1	35120-54P00	UNIT, HEADLAMP RH	1	LHD
1-2	35120-54P10	UNIT, HEADLAMP RH	1	RHD
2	35118-68K00	SOCKET, POSITION LAMP	1	
3	35179-76F10	COVER, SOCKET	2	
4	36118-77A00	SOCKET, TURN LAMP	1	
5	09471-12151	BULB (12V60W,HB3,#9005) (KOITO)	1	
6	09471-12186	BULB (12V21W)	1	
7	09471-12210	BULB (12V55W/H11)	1	
8	09471-12216	BULB (12V5W)	1	
9-1	35320-54P00	UNIT, HEADLAMP LH	1	LHD
9-2	35320-54P10	UNIT, HEADLAMP LH	1	RHD
10	35118-68K00	SOCKET, POSITION LAMP	1	
11	35179-76F10	COVER, SOCKET	2	
12	36118-77A00	SOCKET, TURN LAMP	1	
13	09471-12151	BULB (12V60W,HB3,#9005) (KOITO)	1	
14	09471-12186	BULB (12V21W)	1	
15	09471-12210	BULB (12V55W/H11)	1	
16	09471-12216	BULB (12V5W)	1	
17	35181-71L00	SCREW	8	
18	09409-08327	CLIP (7.8X20)	2	
19	36410-51K00	LAMP ASSY, TURN SIGNAL	2	

FIG.330B

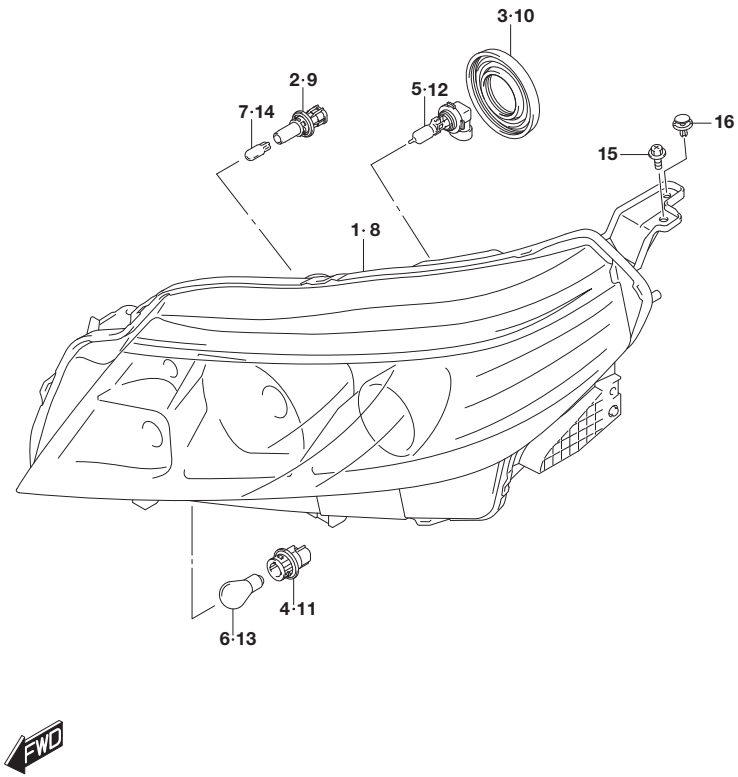

FIG.330B (2-D-13) HEADLAMP (W/LED HEADLAMP:(K10C,K14C))

REF NO.	PART NO.	DESCRIPTION	Q'TY	REMARKS
1-1	35120-54P50	UNIT, HEADLAMP RH	1	LHD
1-2	35120-54P60	UNIT, HEADLAMP RH	1	RHD
2	35118-68K00	SOCKET, POSITION LAMP	1	
3	35179-76F10	COVER, SOCKET	1	
4	36118-77A00	SOCKET, TURN LAMP	1	
5	09471-12151	BULB (12V60W,HB3,#9005) (KOITO)	1	
6	09471-12186	BULB (12V21W)	1	
7	09471-12216	BULB (12V5W)	1	
8-1	35320-54P50	UNIT, HEADLAMP LH	1	LHD
8-2	35320-54P60	UNIT, HEADLAMP LH	1	RHD
9	35118-68K00	SOCKET, POSITION LAMP	1	
10	35179-76F10	COVER, SOCKET	1	
11	36118-77A00	SOCKET, TURN LAMP	1	
12	09471-12151	BULB (12V60W,HB3,#9005) (KOITO)	1	
13	09471-12186	BULB (12V21W)	1	
14	09471-12216	BULB (12V5W)	1	
15	35181-71L00	SCREW	8	
16	09409-08327	CLIP (7.8X20)	2	

FIG.330C

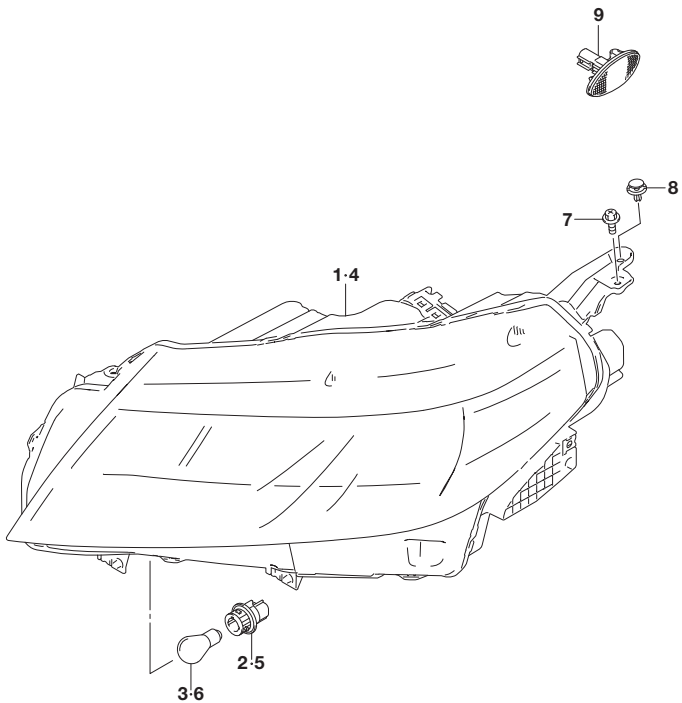

FIG.330C (2-D-14) HEADLAMP (W/LED HEADLAMP:K14D)

REF NO.	PART NO.	DESCRIPTION	Q'TY	REMARKS
1-1	35120-74S00	UNIT, HEADLAMP RH	1	LHD
1-2	35120-74S10	UNIT, HEADLAMP RH	1	RHD
2	36118-77A00	SOCKET, TURN LAMP	1	
3	09471-12186	BULB (12V21W)	1	
4-1	35320-74S00	UNIT, HEADLAMP LH	1	LHD
4-2	35320-74S10	UNIT, HEADLAMP LH	1	RHD
5	36118-77A00	SOCKET, TURN LAMP	1	
6	09471-12186	BULB (12V21W)	1	
7	35181-71L00	SCREW	8	
8	09409-08327	CLIP (7.8X20)	2	
9	36410-51K00	LAMP ASSY, TURN SIGNAL	2	W/FENDER TURN SIGNAL

FIG.332A

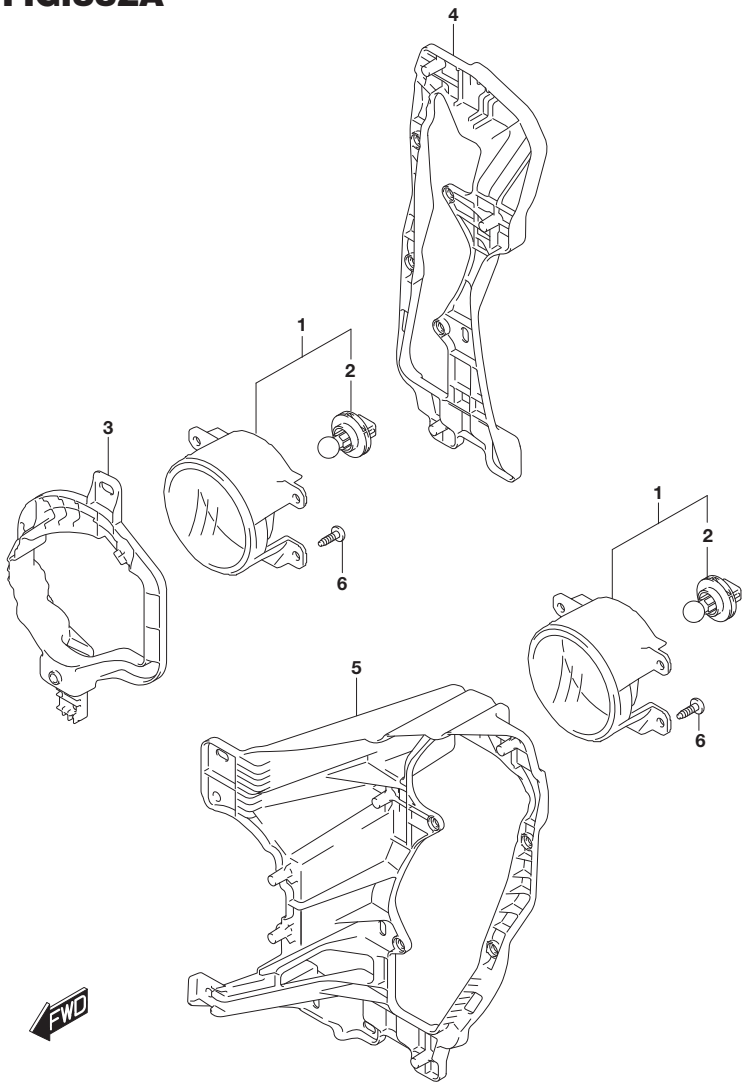

FIG.332A (2-E-2) FRONT FOG LAMP (W/BULB DRL)

REF NO.	PART NO.	DESCRIPTION	Q'TY	REMARKS
1	36580-54P00	LAMP ASSY, DRL	2	
2	09471-12238	.BULB (P13W)	2	
3	35526-86R10	BRACKET, FOG LAMP RH	1	
4	35526-86R20	BRACKET, DRL RH	1	
5	35566-86R00	BRACKET, FOG LAMP LH	1	
6	03541-0516A	SCREW	19	

APK414-3 P22 332A
FRONT FOG LAMP (1)

FIG.332B

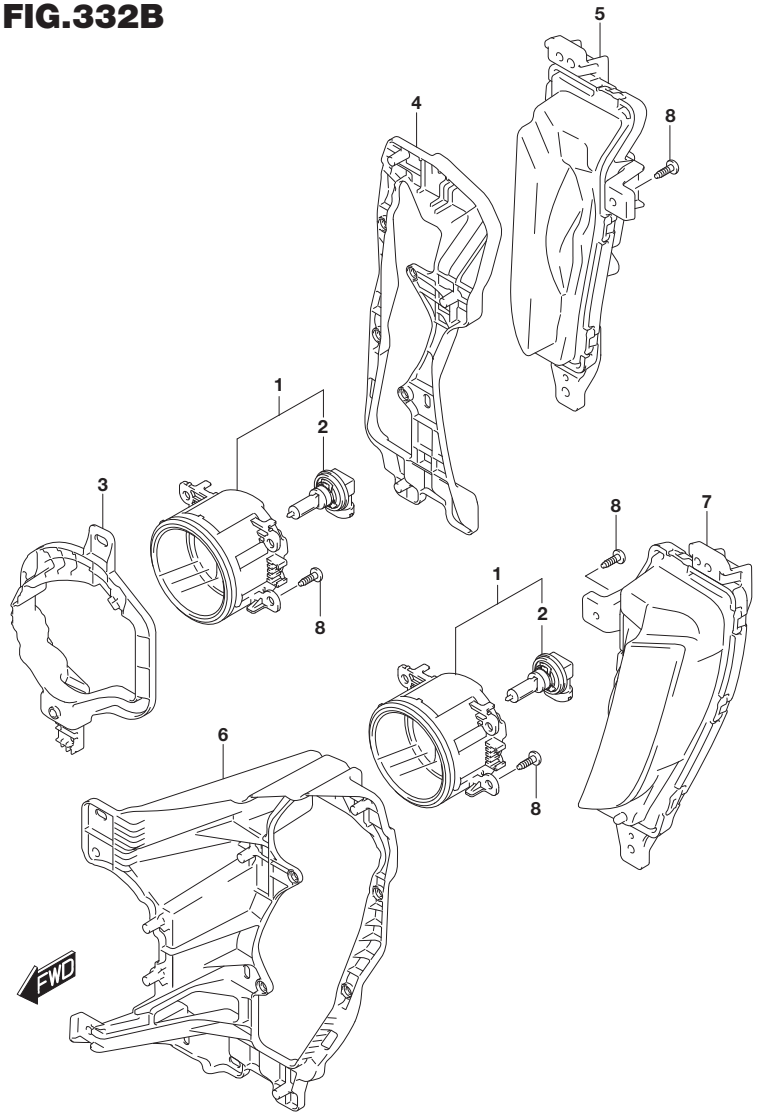

FIG.332B (2-E-3) FRONT FOG LAMP (W/LED DRL)

REF NO.	PART NO.	DESCRIPTION	Q'TY	REMARKS
1	35500-62J01	LAMP ASSY, FOG	2	
2	09471-12210	.BULB (12V55W/H11)	2	
3	35526-86R10	BRACKET, FOG LAMP RH	1	
4	35526-86R20	BRACKET, DRL RH	1	
5	36583-54P00	LAMP ASSY, DRL RH	1	
6	35566-86R00	BRACKET, FOG LAMP LH	1	
7	36584-54P00	LAMP ASSY, DRL LH	1	
8	03541-0516A	SCREW	25	

APK414-3 P22 332B
FRONT FOG LAMP (2)

FIG.336A

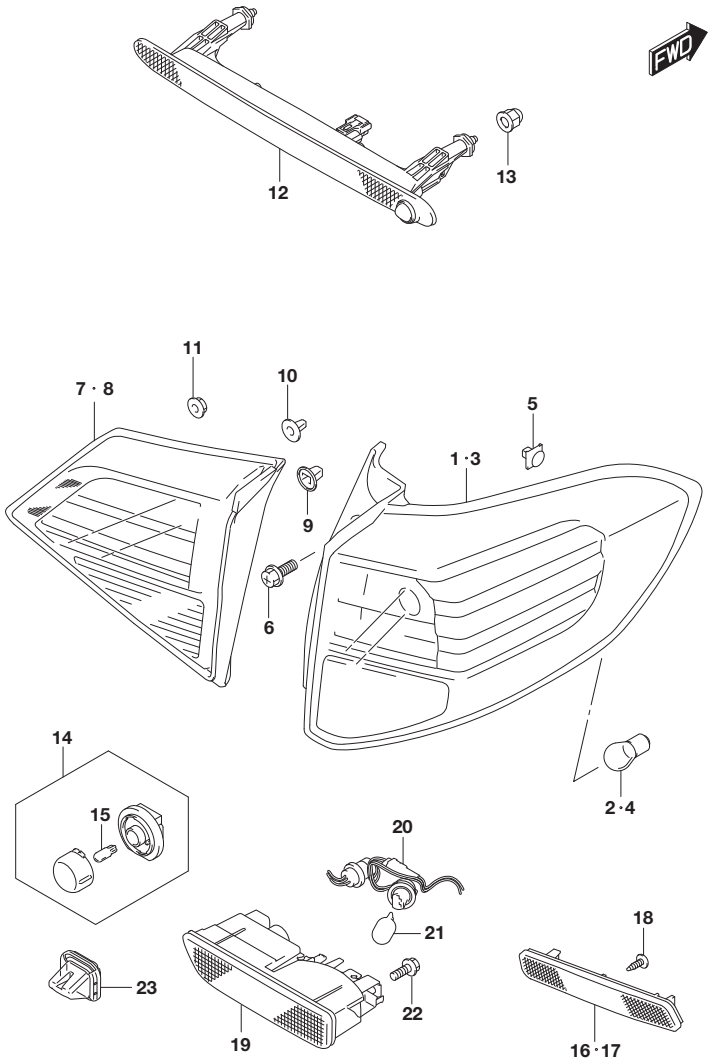

FIG.336A (2-E-4) REAR LAMP

REF NO.	PART NO.	DESCRIPTION	Q'TY	REMARKS
1	35650-86R00	LAMP UNIT, RR COMB RH	1	
2	09471-12045	BULB (12V21W)	1	
3	35670-86R00	LAMP UNIT, RR COMB LH	1	
4	09471-12045	BULB (12V21W)	1	
5	35153-65J00	GROMMET, RR COMB LAMP	4	
6	09128-06090	SCREW (6X16)	4	
7	35701-86R00	LAMP ASSY, TAIL RH	1	
8	35702-86R00	LAMP ASSY, TAIL LH	1	
9	35153-54G00	GROMMET, RR COMB LAMP	2	
10	35153-63G00	GROMMET, RR COMB LAMP	2	
11	09159-06096	NUT	2	
12	35810-71LA1	LAMP ASSY, HIGH MT STOP	1	
13	09159-06100	NUT	2	
14	35910-75F31	LAMP ASSY, LICENSE	2	K10C,K14C
15	09471-12216	.BULB (12V5W)	2	K10C,K14C
16	35970-79J02	REFLECTOR ASSY, REAR RH	1	
17	35950-79J02	REFLECTOR ASSY, REAR LH	1	
18	03141-0516A	SCREW	2	
19-1	36254-86R00	LAMP UNIT, BACKUP & RR FOG	1	LHD
19-2	36254-86R10	LAMP UNIT, BACKUP & RR FOG	1	RHD
20-1	36258-86R00	SOCKET & CORD ASSY	1	LHD
20-2	36258-86R10	SOCKET & CORD ASSY	1	RHD
21	09471-12191	BULB (12V21W)	1	
22	02162-0616A	SCREW	2	
23	35910-62R00	LAMP ASSY, LICENSE	1	K14D

APK414-3 P22 336A
REAR LAMP

FIG.338A

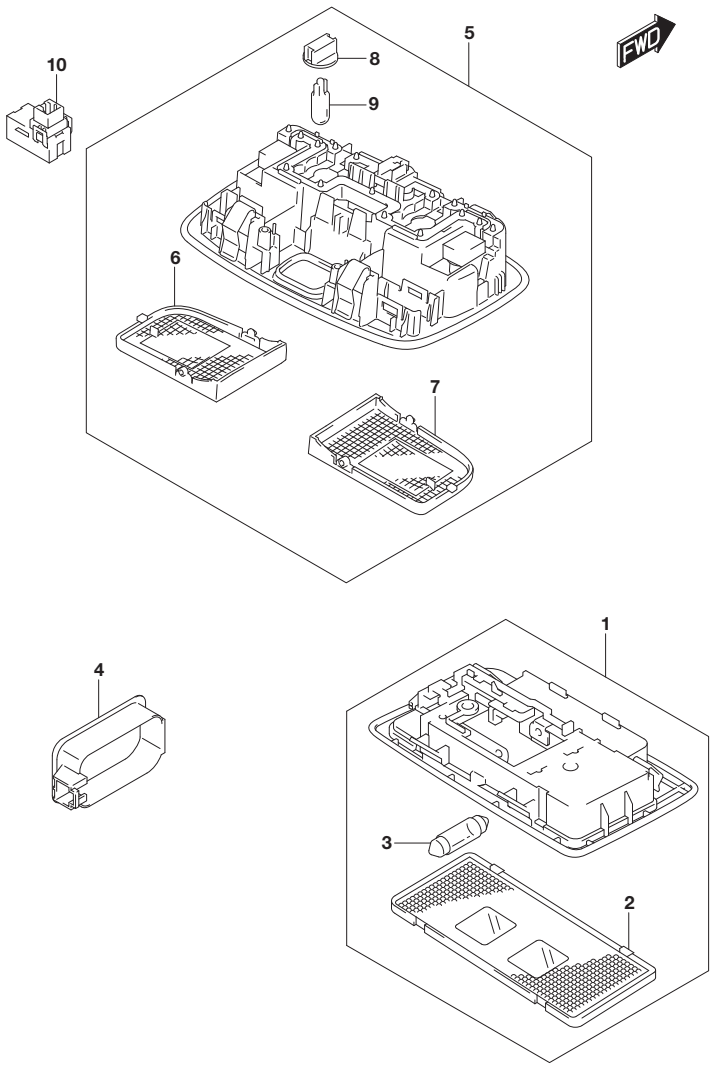

FIG.338A (2-E-5) ROOM LAMP (SEE NOTE)

REF NO.	PART NO.	DESCRIPTION	Q'TY	REMARKS
1	36210-60P01-6GS	LAMP ASSY, ROOM (GRAY)	1	
2	36212-60P00	.LENS	1	
3	09471-12181	.BULB (12V10W)	1	
4	36216-54G00-5PK	COVER, LUGGAGE LAMP HOLE (BLACK)	1	
5-1	36230-68L00-6GS	LAMP ASSY, SPOT (GRAY)	1	N/MICROPHONE
5-2	36230-54P10-6GS	LAMP ASSY, SPOT (GRAY)	1	W/MICROPHONE:LHD
5-3	36230-54P20-6GS	LAMP ASSY, SPOT (GRAY)	1	W/MICROPHONE:RHD
6	36212-68L00	.LENS LH	1	
7	36212-68L10	.LENS RH	1	
8	36218-68L00	.SOCKET, BULB	2	
9	09471-12216	.BULB (12V5W)	2	
10	39813-62R00	MIC ASSY, HANDS FREE	1	W/MICROPHONE

NOTE : N/SUNROOF:TYPE 3:K10C:N/CRUISE CONTROL

FIG.338B(2-E-6) ROOM LAMP
(N/SUNROOF:TYPE 3:(K10C,K14C):W/CRUISE CONTROL,N/SUNROOF:
TYPE 4)
FIG.338C(2-E-7) ROOM LAMP (N/SUNROOF:TYPE 3:K14D)
FIG.338D(2-E-8) ROOM LAMP (W/SUNROOF)

FIG.338B

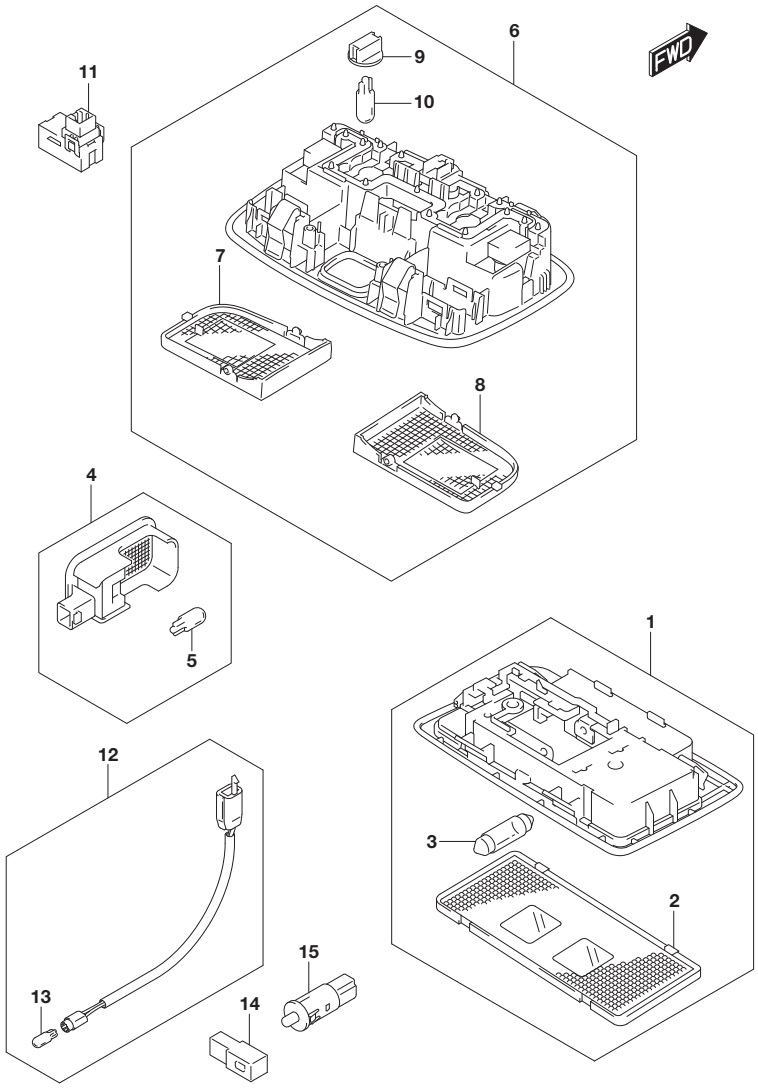

FIG.338B (2-E-6) ROOM LAMP (SEE NOTE)

REF NO.	PART NO.	DESCRIPTION	Q'TY	REMARKS
1	36210-60P01-6GS	LAMP ASSY, ROOM (GRAY)	1	
2	36212-60P00	.LENS	1	
3	09471-12181	.BULB (12V10W)	1	
4	36210-79J00	LAMP ASSY, LUGGAGE ROOM	1	
5	09471-12216	.BULB (12V5W)	1	
6-1	36230-68L00-6GS	LAMP ASSY, SPOT (GRAY)	1	N/MICROPHONE
6-2	36230-54P10-6GS	LAMP ASSY, SPOT (GRAY)	1	W/MICROPHONE:LHD
6-3	36230-54P20-6GS	LAMP ASSY, SPOT (GRAY)	1	W/MICROPHONE:RHD
7	36212-68L00	.LENS LH	1	
8	36212-68L10	.LENS RH	1	
9	36218-68L00	.SOCKET, BULB	2	
10	09471-12216	.BULB (12V5W)	2	
11	39813-62R00	MIC ASSY, HANDS FREE	1	W/MICROPHONE
12	36550-60E00	LAMP ASSY, ASHTRAY ILLUM	1	
13	09471-12091	.BULB (12V1.4W G30) (DENSO)	1	
14	36550-57L30	LAMP ASSY, FLOOR	2	
15	37690-57L00	SWITCH ASSY, GLOVE BOX	1	

NOTE : N/SUNROOF:TYPE 3:(K10C,K14C):W/CRUISE CONTROL,N/SUNROOF: TYPE 4

APK414-3 P22 338B
ROOM LAMP (2)

FIG.338C

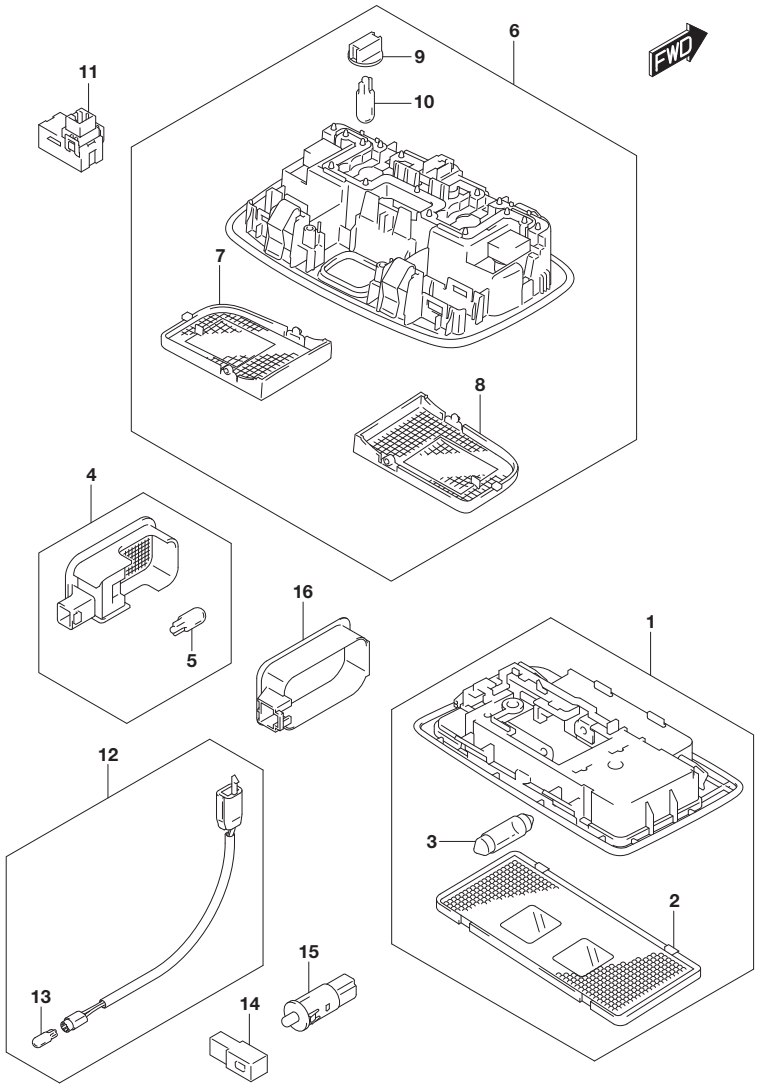

APK414-3 P22 338C
ROOM LAMP (3)

FIG.338C (2-E-7) ROOM LAMP (N/SUNROOF:TYPE 3:K14D)

REF NO.	PART NO.	DESCRIPTION	Q'TY	REMARKS
1	36210-60P01-6GS	LAMP ASSY, ROOM (GRAY)	1	
2	36212-60P00	.LENS	1	
3	09471-12181	.BULB (12V10W)	1	
4	36210-79J00	LAMP ASSY, LUGGAGE ROOM	1	W/LUGGAGE ROOM LAMP
5	09471-12216	.BULB (12V5W)	1	W/LUGGAGE ROOM LAMP
6-1	36230-68L00-6GS	LAMP ASSY, SPOT (GRAY)	1	N/MICROPHONE
6-2	36230-54P10-6GS	LAMP ASSY, SPOT (GRAY)	1	W/MICROPHONE:LHD
6-3	36230-54P20-6GS	LAMP ASSY, SPOT (GRAY)	1	W/MICROPHONE:RHD
7	36212-68L00	.LENS LH	1	
8	36212-68L10	.LENS RH	1	
9	36218-68L00	.SOCKET, BULB	2	
10	09471-12216	.BULB (12V5W)	2	
11	39813-62R00	MIC ASSY, HANDS FREE	1	W/MICROPHONE
12	36550-60E00	LAMP ASSY, ASHTRAY ILLUM	1	W/FOOT ILLUMINATION
13	09471-12091	.BULB (12V1.4W G30) (DENSO)	1	W/FOOT ILLUMINATION
14	36550-57L30	LAMP ASSY, FLOOR	2	W/FOOT ILLUMINATION
15	37690-57L00	SWITCH ASSY, GLOVE BOX	1	W/FOOT ILLUMINATION
16	36216-54G00-5PK	COVER, LUGGAGE LAMP HOLE (BLACK)	1	N/LUGGAGE ROOM LAMP

FIG.338D

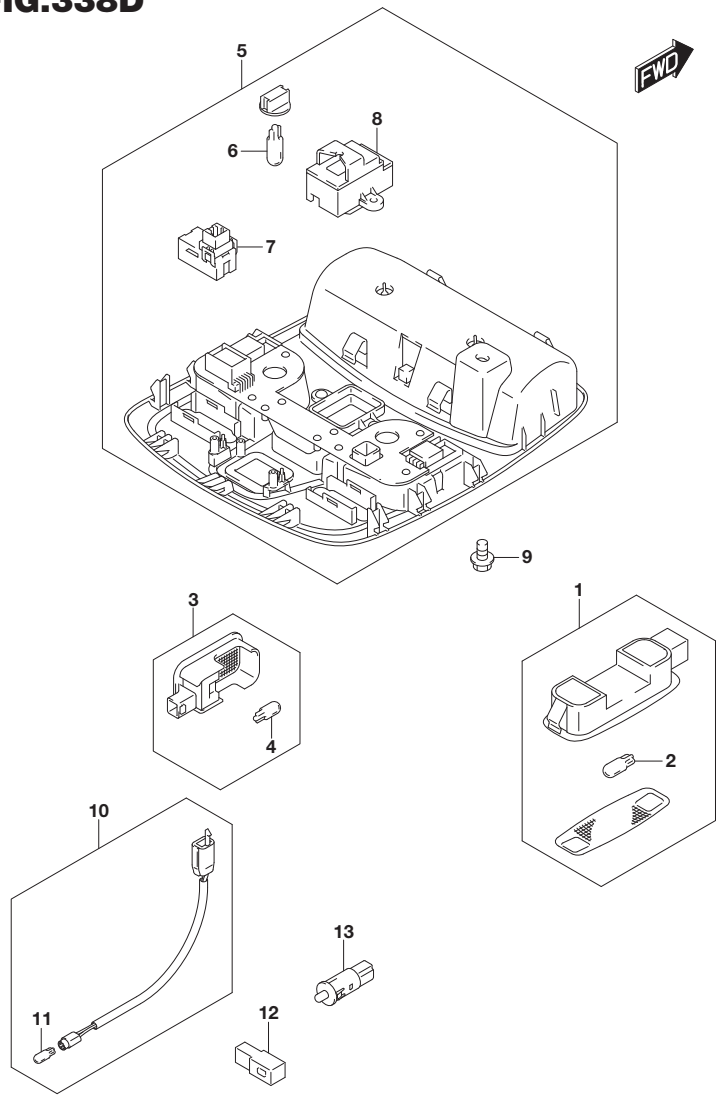

FIG.338D (2-E-8) ROOM LAMP (W/SUNROOF)

REF NO.	PART NO.	DESCRIPTION	Q'TY	REMARKS
1	36210-61M00-6GS	LAMP ASSY, ROOM (GRAY)	2	
2	09471-12216	.BULB (12V5W)	2	
3	36210-79J00	LAMP ASSY, LUGGAGE ROOM	1	
4	09471-12216	.BULB (12V5W)	1	
5-1	36230-61M30-6GS	LAMP ASSY, SPOT (GRAY)	1	N/MICROPHONE
5-2	36230-61M51-6GS	LAMP ASSY, SPOT (GRAY)	1	W/MICROPHONE:LHD
5-3	36230-61M61-6GS	LAMP ASSY, SPOT (GRAY)	1	W/MICROPHONE:RHD
6	09471-12216	.BULB (12V5W)	2	
7	39813-62R00	.MIC ASSY, HANDS FREE	1	W/MICROPHONE
8	37880-61M00-6GS	.SWITCH ASSY, SUN ROOF (GRAY)	1	
9	01551-0612C	BOLT	1	
10	36550-60E00	LAMP ASSY, ASHTRAY ILLUM	1	
11	09471-12091	.BULB (12V1.4W G30) (DENSO)	1	
12	36550-57L30	LAMP ASSY, FLOOR	2	
13	37690-57L00	SWITCH ASSY, GLOVE BOX	1	

APK414-3 P22 338D
ROOM LAMP (4)

FIG.348A

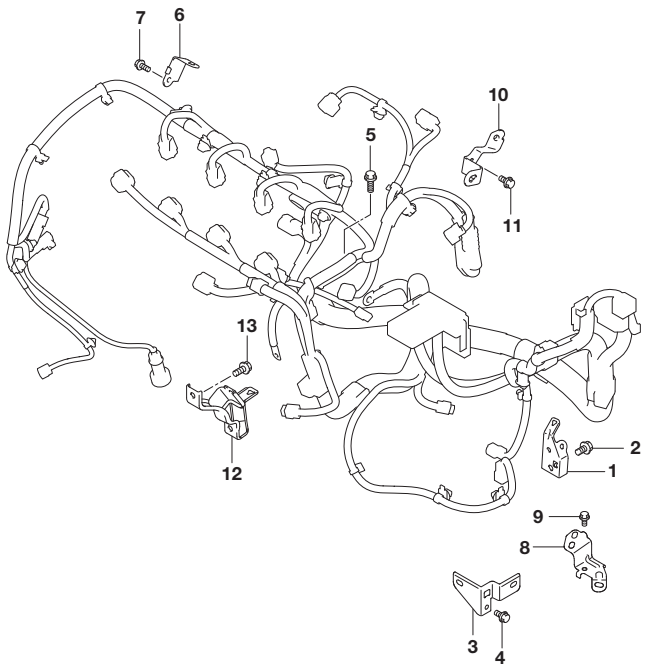

FIG.348A (2-E-9) ENGINE HARNESS BRACKET (5MT)

REF NO.	PART NO.	DESCRIPTION	Q'TY	REMARKS
1	36654-51K20	BRACKET, ENG HARN HOOK	1	
2	01550-0812A	BOLT	1	
3	36651-61MB0	BRACKET, ENG HARN BACK	1	
4	01550-0612A	BOLT	1	
5	01550-0616C	BOLT	1	
6	36653-68P40	BRACKET, ENG HARN PROTECTOR	1	
7	01550-0612A	BOLT	1	
8	36651-64RA0	BRACKET, ENG HARN MT	1	
9	01550-0612C	BOLT	1	
10	36653-68P70	BRACKET, ENG HARN	1	
11	01550-0612A	BOLT	1	
12	36653-64R60	BRACKET, ENG HARN	1	
13	01550-0612A	BOLT	2	

FIG.348B(2-E-10) ENGINE HARNESS BRACKET (6MT:K14C)
FIG.348C(2-E-11) ENGINE HARNESS BRACKET (6MT:K14D)
FIG.348D(2-E-12) ENGINE HARNESS BRACKET (6AT:K10C)
FIG.348E(2-E-13) ENGINE HARNESS BRACKET (6AT:K14C)

FIG.348B

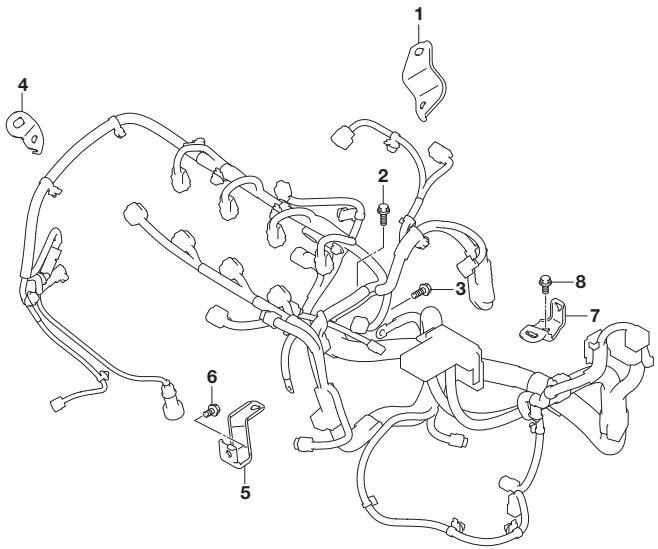

FIG.348B (2-E-10) ENGINE HARNESS BRACKET (6MT:K14C)

REF NO.	PART NO.	DESCRIPTION	Q'TY	REMARKS
1	36651-68M00	BRACKET, ENG HARN	1	
2	01550-0616A	BOLT	2	
3	01550-0616A	BOLT	1	
4	36651-68M20	BRACKET, ENG HARN	1	
5	36651-68M10	BRACKET, ENG HARN	1	
6	01550-0612A	BOLT	1	
7	36653-54P00	BRACKET, BTRY GND	1	
8	01550-0612A	BOLT	1	

FIG.348C

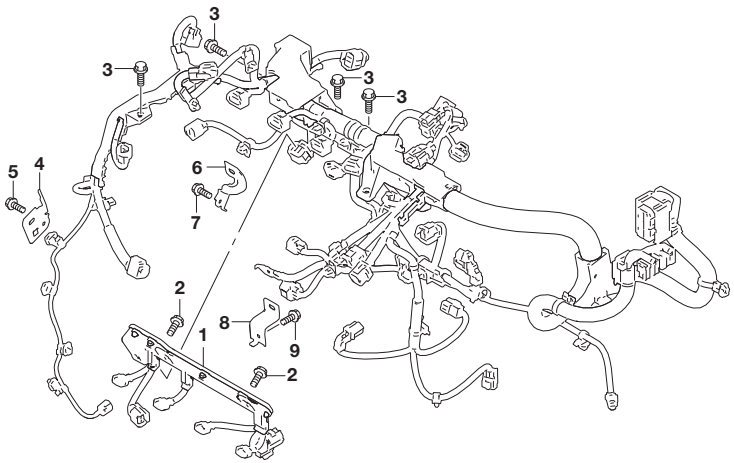

FIG.348C (2-E-11) ENGINE HARNESS BRACKET (6MT:K14D)

REF NO.	PART NO.	DESCRIPTION	Q'TY	REMARKS
1	15716-53SA0	WIRE, INJ KNOCK	1	
2	01550-0616A	BOLT	2	
3	01550-0616C	BOLT	4	
4	36653-74S00	BRACKET, ENG HARN	1	
5	01550-0612A	BOLT	1	
6	36653-74S10	BRACKET, ENG HARN	1	
7	01550-0612C	BOLT	1	
8	36653-74S30	BRACKET, ENG HARN	1	
9	01550-0612C	BOLT	1	

FIG.348D

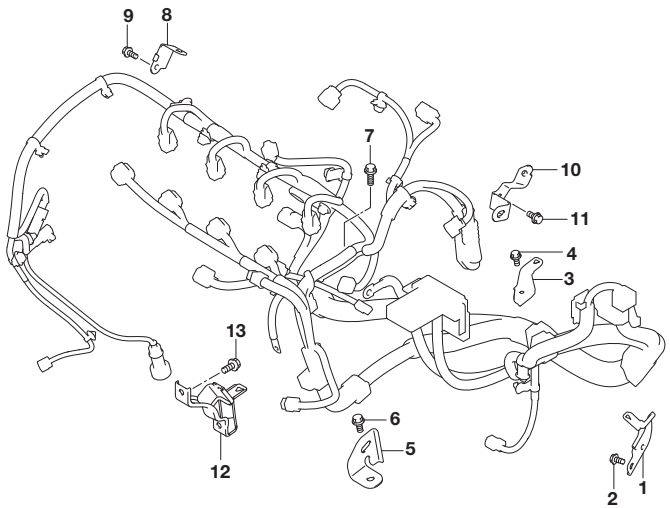

FIG.348D (2-E-12) ENGINE HARNESS BRACKET (6AT:K10C)

REF NO.	PART NO.	DESCRIPTION	Q'TY	REMARKS
1	36653-54PA0	BRACKET, ENG HARN BODY	1	
2	01551-0612C	BOLT	2	
3	36651-60R10	BRACKET, ENG HARN AT	1	
4	01550-0612C	BOLT	1	
5	36651-68P90	BRACKET, ENG HARN AT	1	
6	01550-0612C	BOLT	1	
7	01550-0616C	BOLT	1	
8	36653-68P40	BRACKET, ENG HARN PROTECTOR	1	
9	01550-0612A	BOLT	1	
10	36653-68P70	BRACKET, ENG HARN	1	
11	01550-0612A	BOLT	1	
12	36653-64R60	BRACKET, ENG HARN	1	
13	01550-0612A	BOLT	2	

FIG.348E

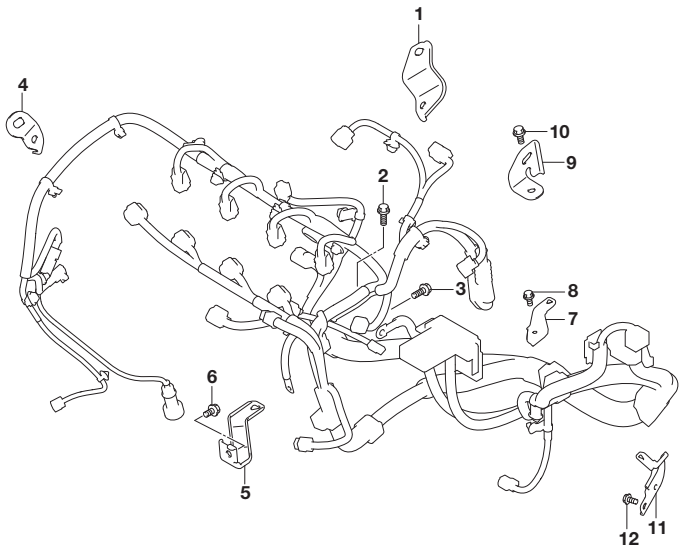

FIG.348E (2-E-13) ENGINE HARNESS BRACKET (6AT:K14C)

REF NO.	PART NO.	DESCRIPTION	Q'TY	REMARKS
1	36651-68M00	BRACKET, ENG HARN	1	
2	01550-0616A	BOLT	2	
3	01550-0616A	BOLT	1	
4	36651-68M20	BRACKET, ENG HARN	1	
5	36651-68M10	BRACKET, ENG HARN	1	
6	01550-0612A	BOLT	1	
7	36651-60R10	BRACKET, ENG HARN AT	1	
8	01550-0612C	BOLT	1	
9	36651-68P90	BRACKET, ENG HARN AT	1	
10	01550-0612C	BOLT	1	
11	36653-54PA0	BRACKET, ENG HARN BODY	1	
12	01551-0612C	BOLT	2	

FIG.34NA

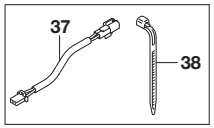

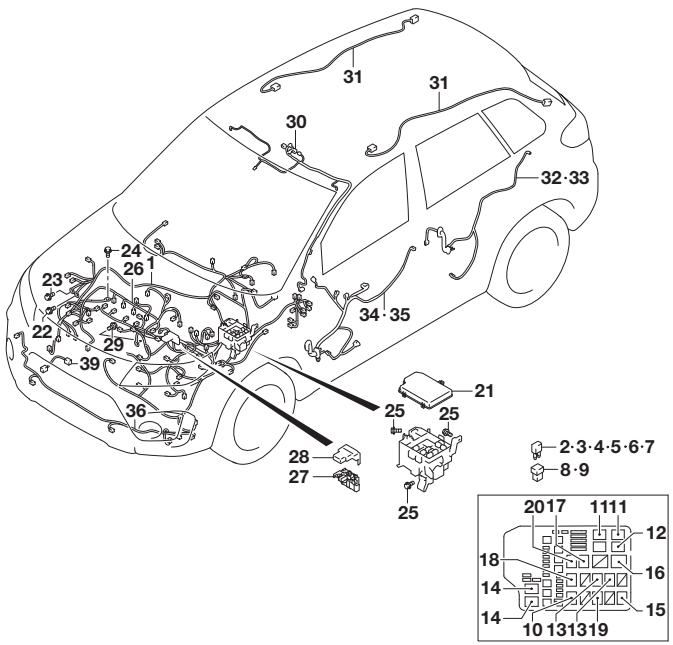

FIG.34NA (2-E-14) WIRING HARNESS FRONT SIDE (TYPE 3:LHD:K10C)

REF NO.	PART NO.	DESCRIPTION	Q'TY	REMARKS
1-1	36601-86R20	HARNESS ASSY, MAIN	1	5MT:GL:2WD:N/AIR CON
1-2	36601-86R30	HARNESS ASSY, MAIN	1	5MT:GL:2WD:W/AUTO AIR CON
1-3	36601-86R40	HARNESS ASSY, MAIN	1	5MT:GL:4WD:N/AIR CON
1-4	36601-86R50	HARNESS ASSY, MAIN	1	5MT:GL:4WD:W/AUTO AIR CON
1-5	36601-86R00	HARNESS ASSY, MAIN	1	5MT:GLX
1-6	36601-86R60	HARNESS ASSY, MAIN	1	6AT:GL:2WD
1-7	36601-86R70	HARNESS ASSY, MAIN	1	6AT:GL:4WD
1-8	36601-86R10	HARNESS ASSY, MAIN	1	6AT:GLX
2	09481-07504	.FUSE (7.5A)	2	
3	09481-10504	.FUSE (10A)	2	
4-1	09481-15504	.FUSE (15A)	4	5MT
4-2	09481-15504	.FUSE (15A)	5	6AT
5	09481-20504	.FUSE (20A)	3	
6	09481-25504	.FUSE (25A)	3	
7-1	09481-30504	.FUSE (30A)	3	5MT
7-2	09481-30504	.FUSE (30A)	4	6AT
8	09481-30403	.FUSE (30A)	4	
9	09481-40403	.FUSE (40A)	2	
10	38860-76F01	.RELAY ASSY	1	ST
11	38860-76F01	.RELAY ASSY	2	RDTR
12	38860-78F00	.RELAY ASSY	1	RDTR
13	38860-76F01	.RELAY ASSY	2	HEAD LAMP
14	38860-78F00	.RELAY ASSY	2	GLX
				WIPER
15	38860-76F01	RELAY ASSY	1	STARTER 2
16	38860-55P00	RELAY ASSY	1	MAIN

FIG.34NB(2-F-3) WIRING HARNESS FRONT SIDE (TYPE 3:LHD:K14C)
FIG.34NC(2-F-5) WIRING HARNESS FRONT SIDE (TYPE 3:LHD:K14D)
FIG.34ND(2-F-7) WIRING HARNESS FRONT SIDE (TYPE 3:RHD:K10C)
FIG.34NE(2-F-10) WIRING HARNESS FRONT SIDE (TYPE 3:RHD:K14C)
FIG.34NF(2-F-12) WIRING HARNESS FRONT SIDE (TYPE 3:RHD:K14D)
FIG.34NG(2-F-14) WIRING HARNESS FRONT SIDE (TYPE 4:LHD)
FIG.34NH(2-G-2) WIRING HARNESS FRONT SIDE (TYPE 4:RHD)

FIG.34NA

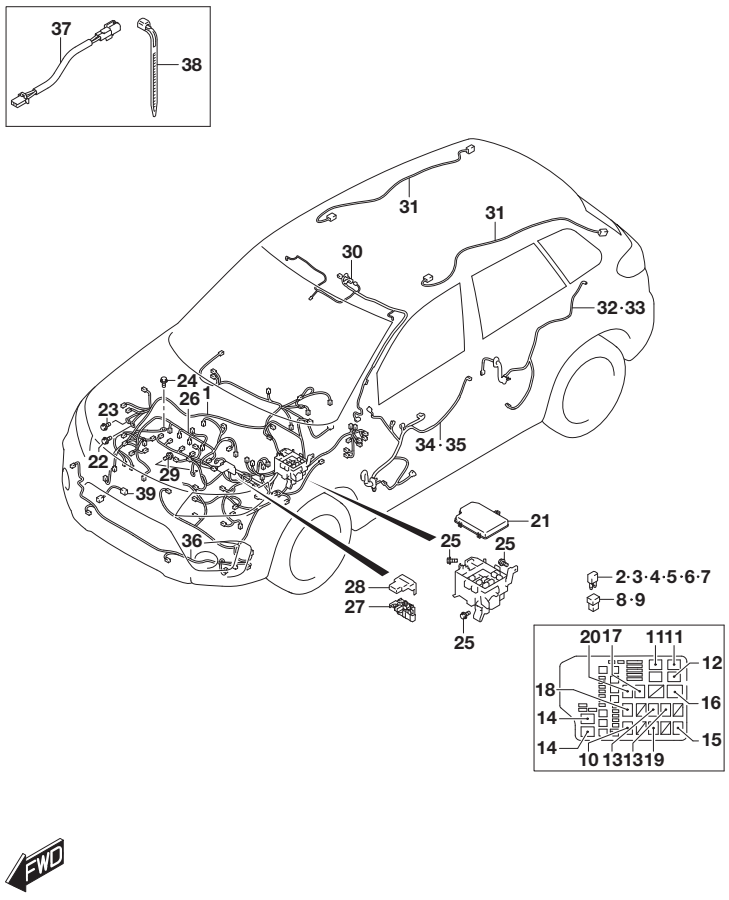

FIG.34NA (2-E-15) WIRING HARNESS FRONT SIDE (TYPE 3:LHD:K10C)

REF NO.	PART NO.	DESCRIPTION	Q'TY	REMARKS
17	38860-76F01	RELAY ASSY	1	FUEL PUMP
18	38860-76F01	RELAY ASSY	1	FR FOG
19	38860-76F01	RELAY ASSY	1	6AT BACK UP LAMP
20	38860-76F01	RELAY ASSY	1	A/C
21-1	36717-54P00	COVER, RELAY BOX	1	
21-2	36717-74S00	COVER, RELAY BOX	1	FROM 2019-10
22	09115-06005	BOLT (6X16)	4	
23	09115-06005	BOLT (6X16)	1	
24	01550-0612C	BOLT	1	
25	02162-0616A	SCREW	3	
26-1	36650-86R00	HARNESS ASSY, ENG	1	5MT:2WD
26-2	36650-86R10	HARNESS ASSY, ENG	1	5MT:4WD
26-3	36650-86RA0	HARNESS ASSY, ENG	1	6AT:2WD
26-4	36650-86RB0	HARNESS ASSY, ENG	1	6AT:4WD
27	36739-61M00	.FUSE, BATTERY	1	
28	36694-66M00	COVER, BTRY TERMINAL	1	
29	01550-0612A	BOLT	1	
30-1	36820-54P00	WIRE, DOME LAMP	1	GL:2WD:N/MICROPHONE: N/FRONT FOG LAMP
30-2	36820-54PA0	WIRE, DOME LAMP	1	GL:2WD:N/MICROPHONE: W/FRONT FOG LAMP
30-3	36820-54P10	WIRE, DOME LAMP	1	GL:2WD:W/MICROPHONE: N/FRONT FOG LAMP
30-4	36820-54PB0	WIRE, DOME LAMP	1	GL:2WD:W/MICROPHONE: W/FRONT FOG LAMP
30-5	36820-54P00	WIRE, DOME LAMP	1	GL:4WD:N/MICROPHONE: N/FRONT FOG LAMP
30-6	36820-86R00	WIRE, DOME LAMP	1	GL:4WD:N/MICROPHONE: W/FRONT FOG LAMP
30-7	36820-54P10	WIRE, DOME LAMP	1	GL:4WD:W/MICROPHONE: N/FRONT FOG LAMP
30-8	36820-86R10	WIRE, DOME LAMP	1	GL:4WD:W/MICROPHONE: W/FRONT FOG LAMP
30-9	36820-86R30	WIRE, DOME LAMP	1	GLX:N/SUNROOF:N/MICROPHONE
30-10	36820-86R40	WIRE, DOME LAMP	1	GLX:N/SUNROOF:W/MICROPHONE

FIG.34NA

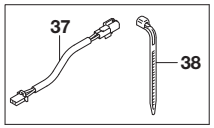

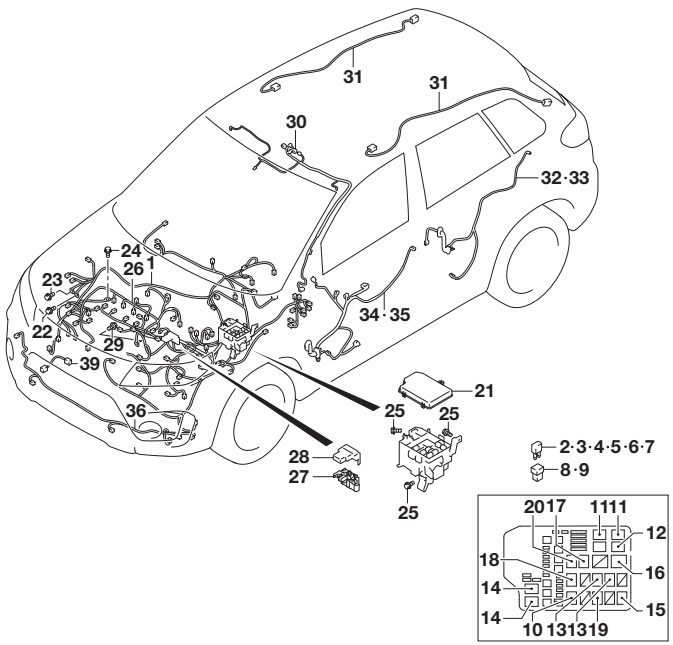

FIG.34NA (2-F-2) WIRING HARNESS FRONT SIDE (TYPE 3:LHD:K10C)

REF NO.	PART NO.	DESCRIPTION	Q'TY	REMARKS
30-11	36820-86R60	WIRE, DOME LAMP	1	GLX:W/SUNROOF
31	36821-54P00	WIRE, RR DOME LAMP	2	GLX:W/SUNROOF
32-1	36751-54P00	WIRE, RR DR RH SIDE	1	GL:N/AEB CAMERA: N/CRUISE CONTROL
32-2	36751-54P10	WIRE, RR DR RH SIDE	1	GL:N/AEB CAMERA: W/CRUISE CONTROL
32-3	36751-54P10	WIRE, RR DR RH SIDE	1	GL:W/AEB MONAURAL CAMERA
32-4	36751-54P10	WIRE, RR DR RH SIDE	1	GLX
33-1	36751-54PA0	WIRE, RR DR LH SIDE	1	GL:N/AEB CAMERA: N/CRUISE CONTROL
33-2	36751-54PB0	WIRE, RR DR LH SIDE	1	GL:N/AEB CAMERA: W/CRUISE CONTROL
33-3	36751-54PB0	WIRE, RR DR LH SIDE	1	GL:W/AEB MONAURAL CAMERA
33-4	36751-54PB0	WIRE, RR DR LH SIDE	1	GLX
34-1	36756-54P00	WIRE, P/W MAIN	1	GL:N/AEB CAMERA
34-2	36756-86R00	WIRE, P/W MAIN	1	GL:W/AEB MONAURAL CAMERA
34-3	36756-86R10	WIRE, P/W MAIN	1	GLX
35-1	36757-54P00	WIRE, P/W SUB	1	GL:N/AEB CAMERA
35-2	36757-86R00	WIRE, P/W SUB	1	GL:W/AEB MONAURAL CAMERA
35-3	36757-86R10	WIRE, P/W SUB	1	GLX
36-1	36813-86RA0	WIRE, FR BUMPER	1	W/HALOGEN HEADLAMP:W/BULB DRL
36-2	36813-86RE0	WIRE, FR BUMPER	1	W/HALOGEN HEADLAMP:W/LED DRL
36-3	36813-86RF0	WIRE, FR BUMPER	1	W/LED HEADLAMP
37	36691-61M10	WIRE, A/B	1	OPT
38	09407-18402	CLAMP (L:165)	5	OPT
39	36895-64R00	WIRE, KNOCK SNSR	1	

FIG.34NB

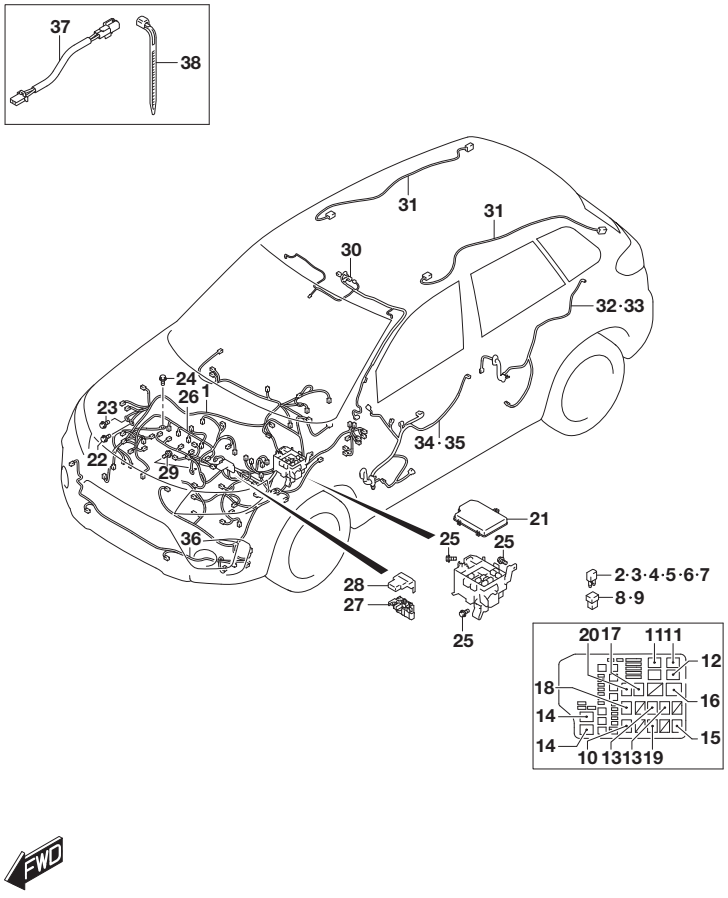

FIG.34NB (2-F-3) WIRING HARNESS FRONT SIDE (TYPE 3:LHD:K14C)

REF NO.	PART NO.	DESCRIPTION	Q'TY	REMARKS
1-1	36601-86R30	HARNESS ASSY, MAIN	1	6MT:GL:2WD
1-2	36601-86R50	HARNESS ASSY, MAIN	1	6MT:GL:4WD
1-3	36601-86R00	HARNESS ASSY, MAIN	1	6MT:GLX
1-4	36601-86R60	HARNESS ASSY, MAIN	1	6AT:GL:2WD
1-5	36601-86R70	HARNESS ASSY, MAIN	1	6AT:GL:4WD
1-6	36601-86R10	HARNESS ASSY, MAIN	1	6AT:GLX
2	09481-07504	.FUSE (7.5A)	2	
3	09481-10504	.FUSE (10A)	2	
4-1	09481-15504	.FUSE (15A)	4	6MT
4-2	09481-15504	.FUSE (15A)	5	6AT
5	09481-20504	.FUSE (20A)	3	
6	09481-25504	.FUSE (25A)	3	
7-1	09481-30504	.FUSE (30A)	3	6MT
7-2	09481-30504	.FUSE (30A)	4	6AT
8	09481-30403	.FUSE (30A)	4	
9	09481-40403	.FUSE (40A)	2	
10	38860-76F01	.RELAY ASSY	1	ST
11	38860-76F01	.RELAY ASSY	2	RDTR
12	38860-78F00	.RELAY ASSY	1	RDTR
13	38860-76F01	.RELAY ASSY	2	HEAD LAMP
14	38860-78F00	.RELAY ASSY	2	GLX
				WIPER
15	38860-76F01	RELAY ASSY	1	STARTER 2
16	38860-55P00	RELAY ASSY	1	MAIN
17	38860-76F01	RELAY ASSY	1	FUEL PUMP
18	38860-76F01	RELAY ASSY	1	FR FOG
19	38860-76F01	RELAY ASSY	1	6AT
				BACK UP LAMP
20	38860-76F01	RELAY ASSY	1	A/C
21-1	36717-54P00	COVER, RELAY BOX	1	
21-2	36717-74S00	COVER, RELAY BOX	1	FROM 2019-10
22	09115-06005	BOLT (6X16)	4	
23	09115-06005	BOLT (6X16)	1	
24	01550-0612C	BOLT	1	
25	02162-0616A	SCREW	3	

FIG.34NB

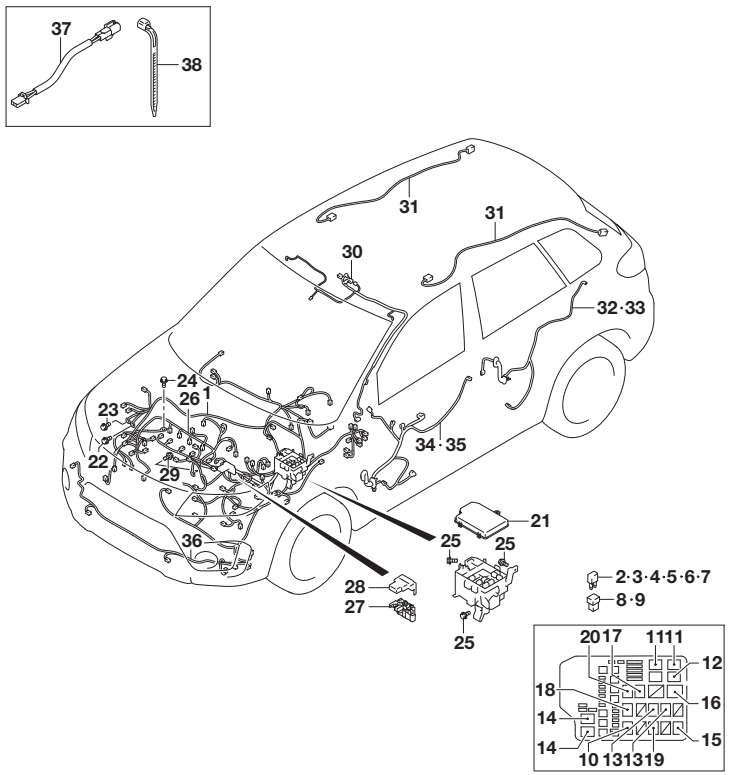

FIG.34NB (2-F-4) WIRING HARNESS FRONT SIDE (TYPE 3:LHD:K14C)

REF NO.	PART NO.	DESCRIPTION	Q'TY	REMARKS
26-1	36650-60R00	HARNESS ASSY, ENG	1	6MT:2WD
26-2	36650-60R20	HARNESS ASSY, ENG	1	6MT:4WD
26-3	36650-60R10	HARNESS ASSY, ENG	1	6AT:2WD
26-4	36650-60R30	HARNESS ASSY, ENG	1	6AT:4WD
27	36739-61M00	.FUSE, BATTERY	1	
28	36694-66M00	COVER, BTRY TERMINAL	1	
29	01550-0612A	BOLT	1	
30-1	36820-54PA0	WIRE, DOME LAMP	1	GL:2WD:N/MICROPHONE
30-2	36820-54PB0	WIRE, DOME LAMP	1	GL:2WD:W/MICROPHONE
30-3	36820-86R00	WIRE, DOME LAMP	1	GL:4WD:N/MICROPHONE
30-4	36820-86R10	WIRE, DOME LAMP	1	GL:4WD:W/MICROPHONE
30-5	36820-86R30	WIRE, DOME LAMP	1	GLX:N/SUNROOF:N/MICROPHONE
30-6	36820-86R40	WIRE, DOME LAMP	1	GLX:N/SUNROOF:W/MICROPHONE
30-7	36820-86R60	WIRE, DOME LAMP	1	GLX:W/SUNROOF
31	36821-54P00	WIRE, RR DOME LAMP	2	GLX:W/SUNROOF
32	36751-54P10	WIRE, RR DR RH SIDE	1	
33	36751-54PB0	WIRE, RR DR LH SIDE	1	
34-1	36756-54P00	WIRE, P/W MAIN	1	GL:N/AEB CAMERA
34-2	36756-86R00	WIRE, P/W MAIN	1	GL:W/AEB MONAURAL CAMERA
34-3	36756-86R10	WIRE, P/W MAIN	1	GLX
35-1	36757-54P00	WIRE, P/W SUB	1	GL:N/AEB CAMERA
35-2	36757-86R00	WIRE, P/W SUB	1	GL:W/AEB MONAURAL CAMERA
35-3	36757-86R10	WIRE, P/W SUB	1	GLX
36-1	36813-86RE0	WIRE, FR BUMPER	1	W/HALOGEN HEADLAMP
36-2	36813-86RF0	WIRE, FR BUMPER	1	W/LED HEADLAMP
37	36691-61M10	WIRE, A/B	1	OPT
38	09407-18402	CLAMP (L:165)	5	OPT

FIG.34NC

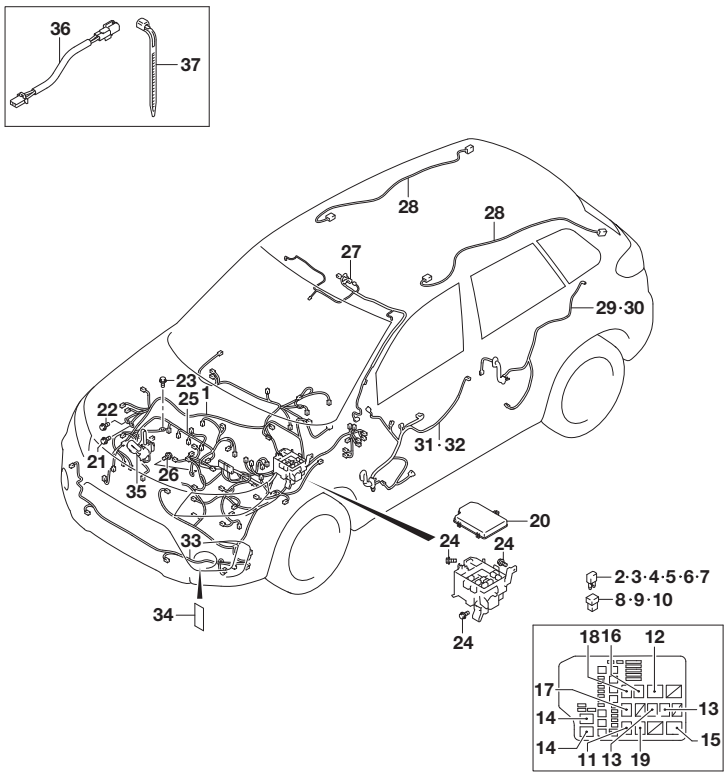

FIG.34NC (2-F-5) WIRING HARNESS FRONT SIDE (TYPE 3:LHD:K14D)

REF NO.	PART NO.	DESCRIPTION	Q'TY	REMARKS
1-1	36601-74S10	HARNESS ASSY, MAIN	1	GL:N/AEB CAMERA
1-2	36601-74S20	HARNESS ASSY, MAIN	1	GL:W/AEB MONAURAL CAMERA
1-3	36601-74S00	HARNESS ASSY, MAIN	1	GLX
2	09481-07504	.FUSE (7.5A)	2	
3	09481-10504	.FUSE (10A)	4	
4	09481-15504	.FUSE (15A)	4	
5	09481-20504	.FUSE (20A)	4	
6	09481-25504	.FUSE (25A)	3	
7	09481-30504	.FUSE (30A)	1	
8	09481-30403	.FUSE (30A)	2	
9	09481-40403	.FUSE (40A)	3	
10	09481-50403	.FUSE (50A)	1	
11	38860-76F01	.RELAY ASSY	1	ST
12	38860-78F00	.RELAY ASSY	1	RDTR
13	38860-76F01	.RELAY ASSY	2	HEAD LAMP
14	38860-78F00	.RELAY ASSY	2	GLX
				WIPER
15	38860-55P00	RELAY ASSY	1	MAIN
16	38860-76F01	RELAY ASSY	1	FUEL PUMP
17	38860-76F01	RELAY ASSY	1	FR FOG
18	38860-76F01	RELAY ASSY	1	A/C
19	38860-76F01	RELAY ASSY	1	VVT
20	36717-74S00	COVER, RELAY BOX	1	
21	09115-06005	BOLT (6X16)	4	
22	09115-06005	BOLT (6X16)	1	
23	01550-0612C	BOLT	1	
24	02162-0616A	SCREW	3	
25-1	36650-74S00	HARNESS ASSY, ENG	1	2WD
25-2	36650-74S10	HARNESS ASSY, ENG	1	4WD
26	01550-0612A	BOLT	1	

FIG.34NC

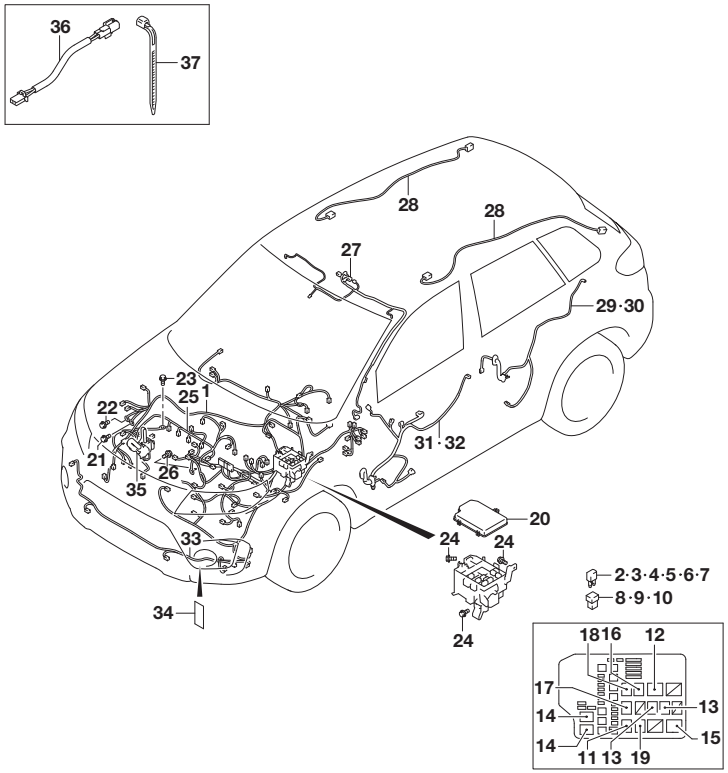

FIG.34NC (2-F-6) WIRING HARNESS FRONT SIDE (TYPE 3:LHD:K14D)

REF NO.	PART NO.	DESCRIPTION	Q'TY	REMARKS
27-1	36820-54P30	WIRE, DOME LAMP	1	N/SUNROOF:N/AEB CAMERA
27-2	36820-86R30	WIRE, DOME LAMP	1	N/SUNROOF: W/AEB MONAURAL CAMERA: N/MICROPHONE
27-3	36820-86R40	WIRE, DOME LAMP	1	N/SUNROOF: W/AEB MONAURAL CAMERA: W/MICROPHONE
27-4	36820-86R60	WIRE, DOME LAMP	1	W/SUNROOF
28	36821-54P00	WIRE, RR DOME LAMP	2	W/SUNROOF
29-1	36751-54P00	WIRE, RR DR RH SIDE	1	W/REAR MANUAL WINDOW
29-2	36751-54P10	WIRE, RR DR RH SIDE	1	W/REAR POWER WINDOW
30-1	36751-54PA0	WIRE, RR DR LH SIDE	1	W/REAR MANUAL WINDOW
30-2	36751-54PB0	WIRE, RR DR LH SIDE	1	W/REAR POWER WINDOW
31-1	36756-54P00	WIRE, P/W MAIN	1	GL:N/BLIND SPOT WARNING
31-2	36756-86R00	WIRE, P/W MAIN	1	GL:W/BLIND SPOT WARNING
31-3	36756-86R10	WIRE, P/W MAIN	1	GLX
32-1	36757-54P00	WIRE, P/W SUB	1	GL:N/BLIND SPOT WARNING
32-2	36757-86R00	WIRE, P/W SUB	1	GL:W/BLIND SPOT WARNING
32-3	36757-86R10	WIRE, P/W SUB	1	GLX
33-1	36813-86RE0	WIRE, FR BUMPER	1	GL
33-2	36813-86RF0	WIRE, FR BUMPER	1	GLX
34	36930-82010	COVER, HARNESS	2	
35	36895-74S10	WIRE, ABV	1	
36	36691-61M10	WIRE, A/B	1	OPT
37	09407-18402	CLAMP (L:165)	5	OPT

APK414-3 P22 34NC
WIRING HARNESS FRONT SIDE (3)

FIG.34ND

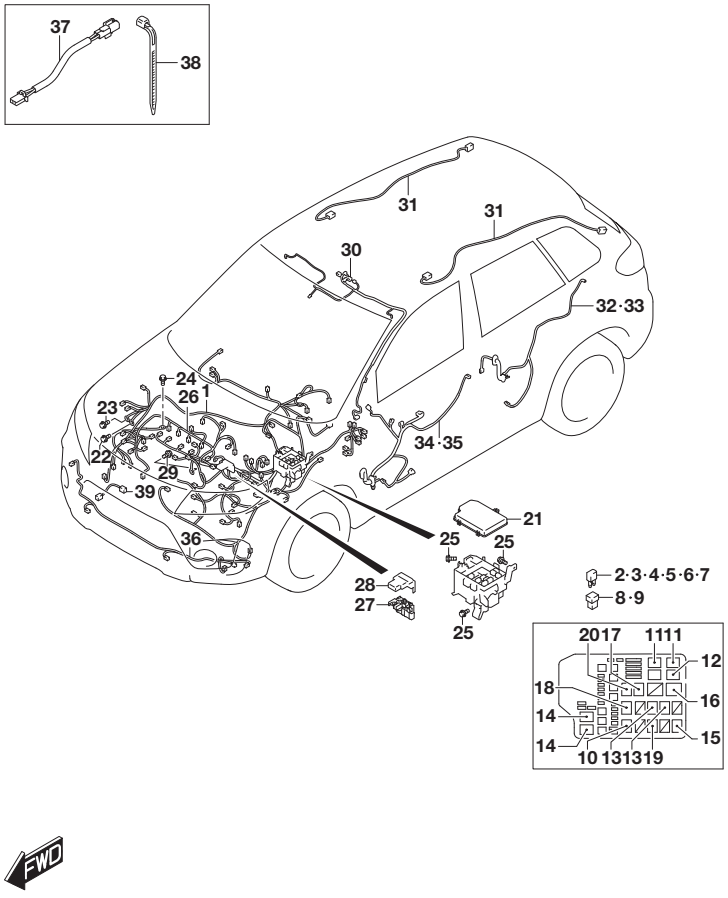

FIG.34ND (2-F-7) WIRING HARNESS FRONT SIDE (TYPE 3:RHD:K10C)

REF NO.	PART NO.	DESCRIPTION	Q'TY	REMARKS
1-1	36610-86R20	HARNESS ASSY, MAIN	1	5MT:GL:2WD:N/AIR CON
1-2	36610-86R30	HARNESS ASSY, MAIN	1	5MT:GL:2WD:W/AUTO AIR CON
1-3	36610-86R50	HARNESS ASSY, MAIN	1	5MT:GL:4WD
1-4	36610-86R00	HARNESS ASSY, MAIN	1	5MT:GLX
1-5	36610-86R60	HARNESS ASSY, MAIN	1	6AT:GL:2WD
1-6	36610-86R70	HARNESS ASSY, MAIN	1	6AT:GL:4WD
1-7	36610-86R10	HARNESS ASSY, MAIN	1	6AT:GLX
2	09481-07504	.FUSE (7.5A)	2	
3	09481-10504	.FUSE (10A)	2	
4-1	09481-15504	.FUSE (15A)	4	5MT
4-2	09481-15504	.FUSE (15A)	5	6AT
5	09481-20504	.FUSE (20A)	3	
6	09481-25504	.FUSE (25A)	3	
7-1	09481-30504	.FUSE (30A)	3	5MT:GL:2WD
7-2	09481-30504	.FUSE (30A)	3	5MT:GL:4WD
7-3	09481-30504	.FUSE (30A)	3	5MT:GLX
7-4	09481-30504	.FUSE (30A)	4	6AT:GL:2WD
7-5	09481-30504	.FUSE (30A)	3	6AT:GL:4WD
7-6	09481-30504	.FUSE (30A)	4	6AT:GLX
8	09481-30403	.FUSE (30A)	4	
9	09481-40403	.FUSE (40A)	2	
10	38860-76F01	.RELAY ASSY	1	ST
11	38860-76F01	.RELAY ASSY	2	RDTR
12	38860-78F00	.RELAY ASSY	1	RDTR
13	38860-76F01	.RELAY ASSY	2	HEAD LAMP
14	38860-78F00	.RELAY ASSY	2	GLX
				WIPER
15	38860-76F01	RELAY ASSY	1	STARTER 2
16	38860-55P00	RELAY ASSY	1	MAIN
17	38860-76F01	RELAY ASSY	1	FUEL PUMP
18	38860-76F01	RELAY ASSY	1	FR FOG
19	38860-76F01	RELAY ASSY	1	6AT
				BACK UP LAMP
20	38860-76F01	RELAY ASSY	1	A/C
21-1	36717-54P00	COVER, RELAY BOX	1	
21-2	36717-74S00	COVER, RELAY BOX	1	FROM 2019-10

FIG.34ND

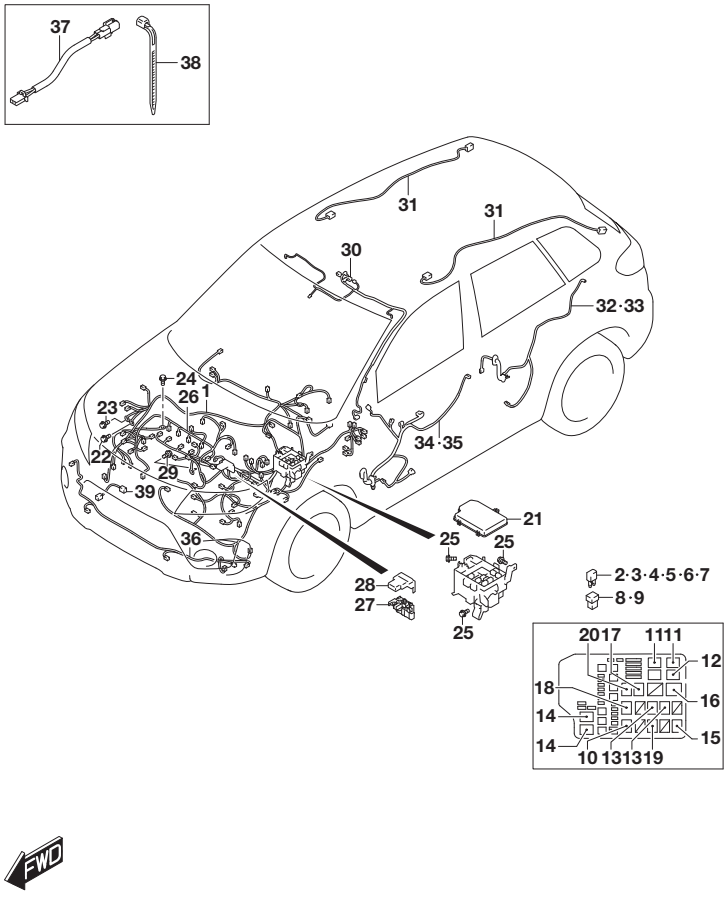

FIG.34ND (2-F-8) WIRING HARNESS FRONT SIDE (TYPE 3:RHD:K10C)

REF NO.	PART NO.	DESCRIPTION	Q'TY	REMARKS
22	09115-06005	BOLT (6X16)	4	
23	09115-06005	BOLT (6X16)	1	
24	01550-0612C	BOLT	1	
25	02162-0616A	SCREW	3	
26-1	36650-86R00	HARNESS ASSY, ENG	1	5MT:2WD
26-2	36650-86R10	HARNESS ASSY, ENG	1	5MT:4WD
26-3	36650-86RA0	HARNESS ASSY, ENG	1	6AT:2WD
26-4	36650-86RB0	HARNESS ASSY, ENG	1	6AT:4WD
27	36739-61M00	.FUSE, BATTERY	1	
28	36694-66M00	COVER, BTRY TERMINAL	1	
29	01550-0612A	BOLT	1	
30-1	36820-54P00	WIRE, DOME LAMP	1	GL:2WD:N/MICROPHONE
30-2	36820-54P10	WIRE, DOME LAMP	1	GL:2WD:W/MICROPHONE: N/FRONT FOG LAMP
30-3	36820-54PB0	WIRE, DOME LAMP	1	GL:2WD:W/MICROPHONE: W/FRONT FOG LAMP
30-4	36820-86R20	WIRE, DOME LAMP	1	GL:4WD
30-5	36820-86R50	WIRE, DOME LAMP	1	GLX:N/SUNROOF
30-6	36820-86R70	WIRE, DOME LAMP	1	GLX:W/SUNROOF
31	36821-54P00	WIRE, RR DOME LAMP	2	GLX:W/SUNROOF
32-1	36751-54P20	WIRE, RR DR RH SIDE	1	GL:N/AEB CAMERA: N/CRUISE CONTROL
32-2	36751-54P30	WIRE, RR DR RH SIDE	1	GL:N/AEB CAMERA: W/CRUISE CONTROL
32-3	36751-54P30	WIRE, RR DR RH SIDE	1	GL:W/AEB MONAURAL CAMERA
32-4	36751-54P30	WIRE, RR DR RH SIDE	1	GLX
33-1	36751-54PC0	WIRE, RR DR LH SIDE	1	GL:N/AEB CAMERA: N/CRUISE CONTROL
33-2	36751-54PD0	WIRE, RR DR LH SIDE	1	GL:N/AEB CAMERA: W/CRUISE CONTROL
33-3	36751-54PD0	WIRE, RR DR LH SIDE	1	GL:W/AEB MONAURAL CAMERA
33-4	36751-54PD0	WIRE, RR DR LH SIDE	1	GLX
34-1	36756-54PA0	WIRE, P/W MAIN	1	GL:N/AEB CAMERA
34-2	36756-86RA0	WIRE, P/W MAIN	1	GL:W/AEB MONAURAL CAMERA
34-3	36756-86RB0	WIRE, P/W MAIN	1	GLX

FIG.34ND

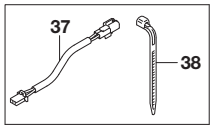

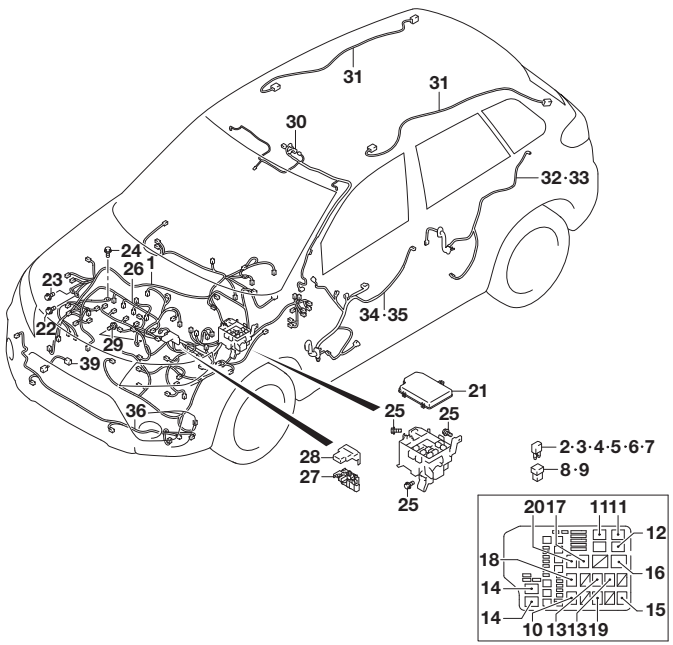

FIG.34ND (2-F-9) WIRING HARNESS FRONT SIDE (TYPE 3:RHD:K10C)

REF NO.	PART NO.	DESCRIPTION	Q'TY	REMARKS
35-1	36757-54PA0	WIRE, P/W SUB	1	GL:N/AEB CAMERA
35-2	36757-86RA0	WIRE, P/W SUB	1	GL:W/AEB MONAURAL CAMERA
35-3	36757-86RB0	WIRE, P/W SUB	1	GLX
36-1	36813-86RA0	WIRE, FR BUMPER	1	W/HALOGEN HEADLAMP: N/CRUISE CONTROL
36-2	36813-86RE0	WIRE, FR BUMPER	1	W/HALOGEN HEADLAMP: W/CRUISE CONTROL
36-3	36813-86RF0	WIRE, FR BUMPER	1	W/LED HEADLAMP
37	36691-61M10	WIRE, A/B	1	OPT
38	09407-18402	CLAMP (L:165)	5	OPT
39	36895-64R00	WIRE, KNOCK SNSR	1	

FIG.34NE

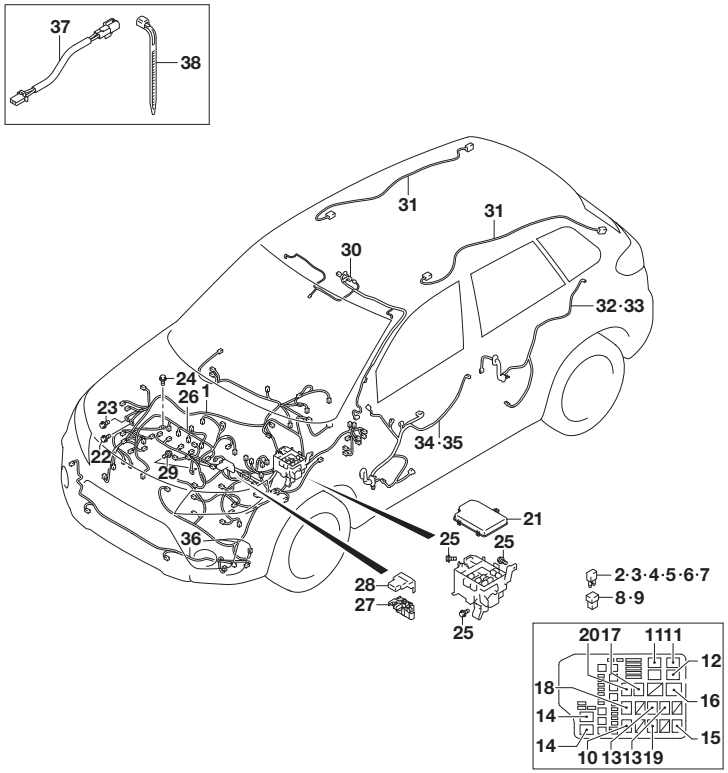

FIG.34NE (2-F-10) WIRING HARNESS FRONT SIDE (TYPE 3:RHD:K14C)

REF NO.	PART NO.	DESCRIPTION	Q'TY	REMARKS
1-1	36610-86R30	HARNESS ASSY, MAIN	1	6MT:GL:2WD
1-2	36610-86R50	HARNESS ASSY, MAIN	1	6MT:GL:4WD
1-3	36610-86R00	HARNESS ASSY, MAIN	1	6MT:GLX
1-4	36610-86R60	HARNESS ASSY, MAIN	1	6AT:GL:2WD
1-5	36610-86R70	HARNESS ASSY, MAIN	1	6AT:GL:4WD
1-6	36610-86R10	HARNESS ASSY, MAIN	1	6AT:GLX
2	09481-07504	.FUSE (7.5A)	2	
3	09481-10504	.FUSE (10A)	2	
4-1	09481-15504	.FUSE (15A)	4	6MT
4-2	09481-15504	.FUSE (15A)	5	6AT
5	09481-20504	.FUSE (20A)	3	
6	09481-25504	.FUSE (25A)	3	
7-1	09481-30504	.FUSE (30A)	3	6MT:GL:2WD
7-2	09481-30504	.FUSE (30A)	3	6MT:GL:4WD
7-3	09481-30504	.FUSE (30A)	3	6MT:GLX
7-4	09481-30504	.FUSE (30A)	4	6AT:GL:2WD
7-5	09481-30504	.FUSE (30A)	3	6AT:GL:4WD
7-6	09481-30504	.FUSE (30A)	4	6AT:GLX
8	09481-30403	.FUSE (30A)	4	
9	09481-40403	.FUSE (40A)	2	
10	38860-76F01	.RELAY ASSY	1	ST
11	38860-76F01	.RELAY ASSY	2	RDTR
12	38860-78F00	.RELAY ASSY	1	RDTR
13	38860-76F01	.RELAY ASSY	2	HEAD LAMP
14	38860-78F00	.RELAY ASSY	2	GLX
				WIPER
15	38860-76F01	RELAY ASSY	1	STARTER 2
16	38860-55P00	RELAY ASSY	1	MAIN
17	38860-76F01	RELAY ASSY	1	FUEL PUMP
18	38860-76F01	RELAY ASSY	1	FR FOG
19	38860-76F01	RELAY ASSY	1	6AT
				BACK UP LAMP
20	38860-76F01	RELAY ASSY	1	A/C
21-1	36717-54P00	COVER, RELAY BOX	1	
21-2	36717-74S00	COVER, RELAY BOX	1	FROM 2019-10
22	09115-06005	BOLT (6X16)	4	

FIG.34NE

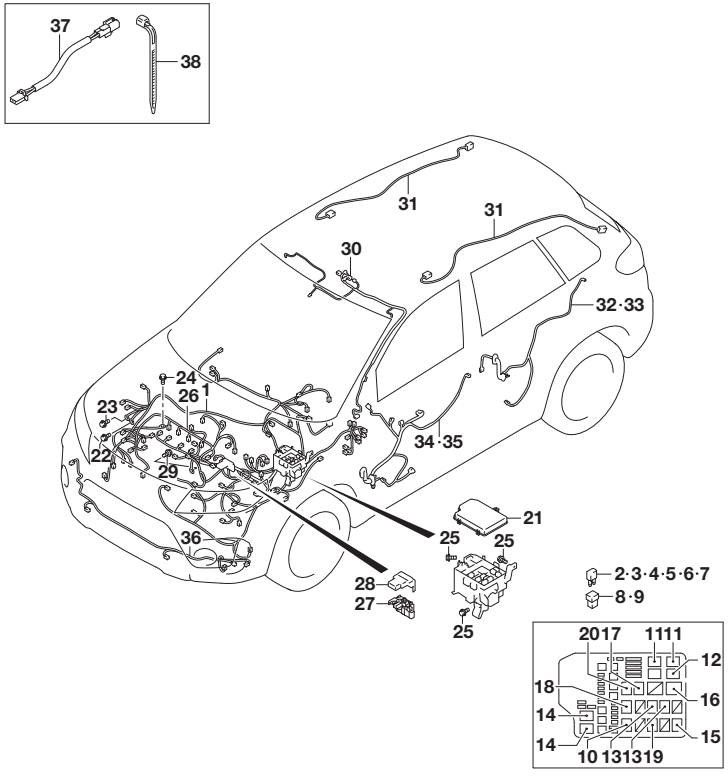

FIG.34NE (2-F-11) WIRING HARNESS FRONT SIDE (TYPE 3:RHD:K14C)

REF NO.	PART NO.	DESCRIPTION	Q'TY	REMARKS
23	09115-06005	BOLT (6X16)	1	
24	01550-0612C	BOLT	1	
25	02162-0616A	SCREW	3	
26-1	36650-60R00	HARNESS ASSY, ENG	1	6MT:2WD
26-2	36650-60R20	HARNESS ASSY, ENG	1	6MT:4WD
26-3	36650-60R10	HARNESS ASSY, ENG	1	6AT:2WD
26-4	36650-60R30	HARNESS ASSY, ENG	1	6AT:4WD
27	36739-61M00	.FUSE, BATTERY	1	
28	36694-66M00	COVER, BTRY TERMINAL	1	
29	01550-0612A	BOLT	1	
30-1	36820-54PB0	WIRE, DOME LAMP	1	GL:2WD
30-2	36820-86R20	WIRE, DOME LAMP	1	GL:4WD
30-3	36820-86R50	WIRE, DOME LAMP	1	GLX:N/SUNROOF
30-4	36820-86R70	WIRE, DOME LAMP	1	GLX:W/SUNROOF
31	36821-54P00	WIRE, RR DOME LAMP	2	GLX:W/SUNROOF
32	36751-54P30	WIRE, RR DR RH SIDE	1	
33	36751-54PD0	WIRE, RR DR LH SIDE	1	
34-1	36756-54PA0	WIRE, P/W MAIN	1	GL:N/AEB CAMERA
34-2	36756-86RA0	WIRE, P/W MAIN	1	GL:W/AEB MONAURAL CAMERA
34-3	36756-86RB0	WIRE, P/W MAIN	1	GLX
35-1	36757-54PA0	WIRE, P/W SUB	1	GL:N/AEB CAMERA
35-2	36757-86RA0	WIRE, P/W SUB	1	GL:W/AEB MONAURAL CAMERA
35-3	36757-86RB0	WIRE, P/W SUB	1	GLX
36-1	36813-86RE0	WIRE, FR BUMPER	1	W/HALOGEN HEADLAMP
36-2	36813-86RF0	WIRE, FR BUMPER	1	W/LED HEADLAMP
37	36691-61M10	WIRE, A/B	1	OPT
38	09407-18402	CLAMP (L:165)	5	OPT

FIG.34NF

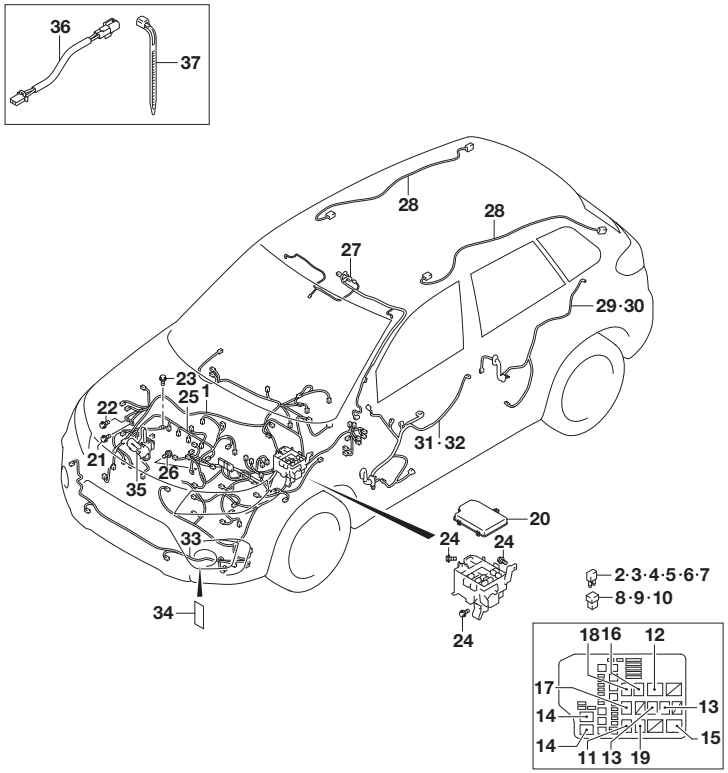

FIG.34NF (2-F-12) WIRING HARNESS FRONT SIDE (TYPE 3:RHD:K14D)

REF NO.	PART NO.	DESCRIPTION	Q'TY	REMARKS
1-1	36610-74S10	HARNESS ASSY, MAIN	1	GL:N/AEB CAMERA
1-2	36610-74S20	HARNESS ASSY, MAIN	1	GL:W/AEB MONAURAL CAMERA
1-3	36610-74S00	HARNESS ASSY, MAIN	1	GLX
2	09481-07504	.FUSE (7.5A)	2	
3	09481-10504	.FUSE (10A)	4	
4	09481-15504	.FUSE (15A)	4	
5	09481-20504	.FUSE (20A)	4	
6	09481-25504	.FUSE (25A)	3	
7	09481-30504	.FUSE (30A)	1	
8	09481-30403	.FUSE (30A)	2	
9	09481-40403	.FUSE (40A)	3	
10	09481-50403	.FUSE (50A)	1	
11	38860-76F01	.RELAY ASSY	1	ST
12	38860-78F00	.RELAY ASSY	1	RDTR
13	38860-76F01	.RELAY ASSY	2	HEAD LAMP
14	38860-78F00	.RELAY ASSY	2	GLX
				WIPER
15	38860-55P00	RELAY ASSY	1	MAIN
16	38860-76F01	RELAY ASSY	1	FUEL PUMP
17	38860-76F01	RELAY ASSY	1	FR FOG
18	38860-76F01	RELAY ASSY	1	A/C
19	38860-76F01	RELAY ASSY	1	VVT
20	36717-74S00	COVER, RELAY BOX	1	
21	09115-06005	BOLT (6X16)	4	
22	09115-06005	BOLT (6X16)	1	
23	01550-0612C	BOLT	1	
24	02162-0616A	SCREW	3	
25-1	36650-74S00	HARNESS ASSY, ENG	1	2WD
25-2	36650-74S10	HARNESS ASSY, ENG	1	4WD
26	01550-0612A	BOLT	1	

FIG.34NF

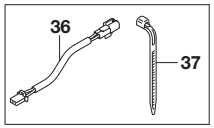

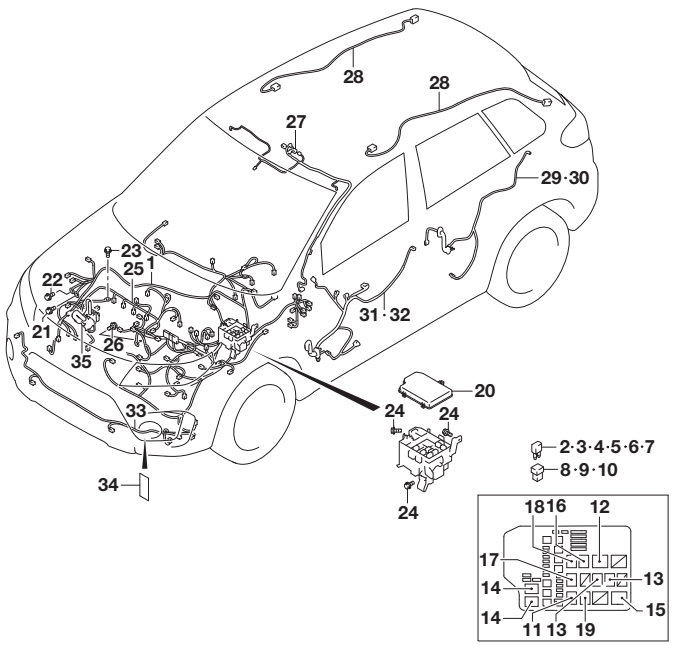

FIG.34NF (2-F-13) WIRING HARNESS FRONT SIDE (TYPE 3:RHD:K14D)

REF NO.	PART NO.	DESCRIPTION	Q'TY	REMARKS
27-1	36820-54P40	WIRE, DOME LAMP	1	N/SUNROOF:N/AEB CAMERA
27-2	36820-86R80	WIRE, DOME LAMP	1	N/SUNROOF: W/AEB MONAURAL CAMERA: N/MICROPHONE
27-3	36820-86R50	WIRE, DOME LAMP	1	N/SUNROOF: W/AEB MONAURAL CAMERA: W/MICROPHONE
27-4	36820-86R70	WIRE, DOME LAMP	1	W/SUNROOF
28	36821-54P00	WIRE, RR DOME LAMP	2	W/SUNROOF
29-1	36751-54P20	WIRE, RR DR RH SIDE	1	W/REAR MANUAL WINDOW
29-2	36751-54P30	WIRE, RR DR RH SIDE	1	W/REAR POWER WINDOW
30-1	36751-54PC0	WIRE, RR DR LH SIDE	1	W/REAR MANUAL WINDOW
30-2	36751-54PD0	WIRE, RR DR LH SIDE	1	W/REAR POWER WINDOW
31-1	36756-54PA0	WIRE, P/W MAIN	1	GL:N/BLIND SPOT WARNING
31-2	36756-86RA0	WIRE, P/W MAIN	1	GL:W/BLIND SPOT WARNING
31-3	36756-86RB0	WIRE, P/W MAIN	1	GLX
32-1	36757-54PA0	WIRE, P/W SUB	1	GL:N/BLIND SPOT WARNING
32-2	36757-86RA0	WIRE, P/W SUB	1	GL:W/BLIND SPOT WARNING
32-3	36757-86RB0	WIRE, P/W SUB	1	GLX
33-1	36813-86RE0	WIRE, FR BUMPER	1	GL
33-2	36813-86RF0	WIRE, FR BUMPER	1	GLX
34	36930-82010	COVER, HARNESS	2	
35	36895-74S10	WIRE, ABV	1	
36	36691-61M10	WIRE, A/B	1	OPT
37	09407-18402	CLAMP (L:165)	5	OPT

FIG.34NG

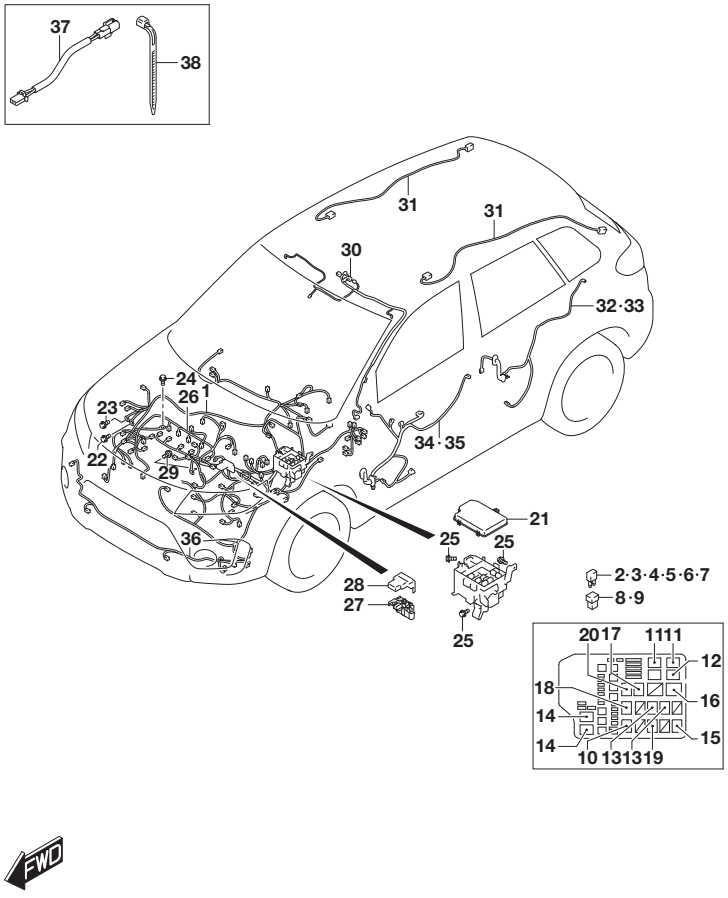

FIG.34NG (2-F-14) WIRING HARNESS FRONT SIDE (TYPE 4:LHD)

REF NO.	PART NO.	DESCRIPTION	Q'TY	REMARKS
1-1	36601-86R30	HARNESS ASSY, MAIN	1	6MT:GL:2WD
1-2	36601-86R50	HARNESS ASSY, MAIN	1	6MT:GL:4WD
1-3	36601-86R00	HARNESS ASSY, MAIN	1	6MT:GLX
1-4	36601-86R60	HARNESS ASSY, MAIN	1	6AT:GL:2WD
1-5	36601-86R70	HARNESS ASSY, MAIN	1	6AT:GL:4WD
1-6	36601-86R10	HARNESS ASSY, MAIN	1	6AT:GLX
2	09481-07504	.FUSE (7.5A)	2	
3	09481-10504	.FUSE (10A)	2	
4-1	09481-15504	.FUSE (15A)	4	6MT
4-2	09481-15504	.FUSE (15A)	5	6AT
5	09481-20504	.FUSE (20A)	3	
6	09481-25504	.FUSE (25A)	3	
7-1	09481-30504	.FUSE (30A)	3	6MT
7-2	09481-30504	.FUSE (30A)	4	6AT
8	09481-30403	.FUSE (30A)	4	
9	09481-40403	.FUSE (40A)	2	
10	38860-76F01	.RELAY ASSY	1	ST
11	38860-76F01	.RELAY ASSY	2	RDTR
12	38860-78F00	.RELAY ASSY	1	RDTR
13	38860-76F01	.RELAY ASSY	2	HEAD LAMP
14	38860-78F00	.RELAY ASSY	2	GLX
				WIPER
15	38860-76F01	RELAY ASSY	1	STARTER 2
16	38860-55P00	RELAY ASSY	1	MAIN
17	38860-76F01	RELAY ASSY	1	FUEL PUMP
18	38860-76F01	RELAY ASSY	1	FR FOG
19	38860-76F01	RELAY ASSY	1	6AT
				BACK UP LAMP
20	38860-76F01	RELAY ASSY	1	A/C
21	36717-74S00	COVER, RELAY BOX	1	
22	09115-06005	BOLT (6X16)	4	
23	09115-06005	BOLT (6X16)	1	
24	01550-0612C	BOLT	1	
25	02162-0616A	SCREW	3	

FIG.34NG

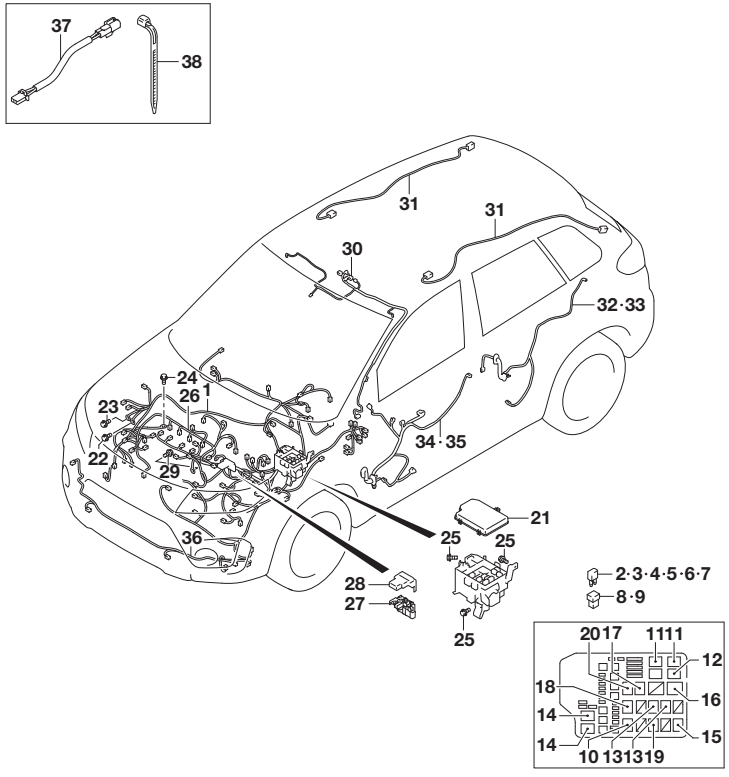

FIG.34NG (2-F-15) WIRING HARNESS FRONT SIDE (TYPE 4:LHD)

REF NO.	PART NO.	DESCRIPTION	Q'TY	REMARKS
26-1	36605-86R00	HARNESS ASSY, ENG	1	6MT:2WD
26-2	36605-86R20	HARNESS ASSY, ENG	1	6MT:4WD
26-3	36605-86R10	HARNESS ASSY, ENG	1	6AT:2WD
26-4	36605-86R30	HARNESS ASSY, ENG	1	6AT:4WD
27	36739-61M00	.FUSE, BATTERY	1	
28	36694-66M00	COVER, BTRY TERMINAL	1	
29	01550-0612A	BOLT	1	
30-1	36820-54PA0	WIRE, DOME LAMP	1	GL:2WD:N/MICROPHONE
30-2	36820-54PB0	WIRE, DOME LAMP	1	GL:2WD:W/MICROPHONE
30-3	36820-86R00	WIRE, DOME LAMP	1	GL:4WD:N/MICROPHONE
30-4	36820-86R10	WIRE, DOME LAMP	1	GL:4WD:W/MICROPHONE
30-5	36820-86R30	WIRE, DOME LAMP	1	GLX:N/SUNROOF:N/MICROPHONE
30-6	36820-86R40	WIRE, DOME LAMP	1	GLX:N/SUNROOF:W/MICROPHONE
30-7	36820-86R60	WIRE, DOME LAMP	1	GLX:W/SUNROOF
31	36821-54P00	WIRE, RR DOME LAMP	2	GLX:W/SUNROOF
32	36751-54P10	WIRE, RR DR RH SIDE	1	
33	36751-54PB0	WIRE, RR DR LH SIDE	1	
34-1	36756-54P00	WIRE, P/W MAIN	1	GL:N/AEB CAMERA
34-2	36756-86R00	WIRE, P/W MAIN	1	GL:W/AEB MONAURAL CAMERA
34-3	36756-86R10	WIRE, P/W MAIN	1	GLX
35-1	36757-54P00	WIRE, P/W SUB	1	GL:N/AEB CAMERA
35-2	36757-86R00	WIRE, P/W SUB	1	GL:W/AEB MONAURAL CAMERA
35-3	36757-86R10	WIRE, P/W SUB	1	GLX
36-1	36813-86RE0	WIRE, FR BUMPER	1	W/HALOGEN HEADLAMP
36-2	36813-86RF0	WIRE, FR BUMPER	1	W/LED HEADLAMP
37	36691-61M10	WIRE, A/B	1	OPT
38	09407-18402	CLAMP (L:165)	5	OPT

FIG.34NH

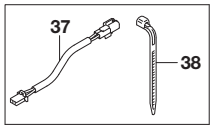

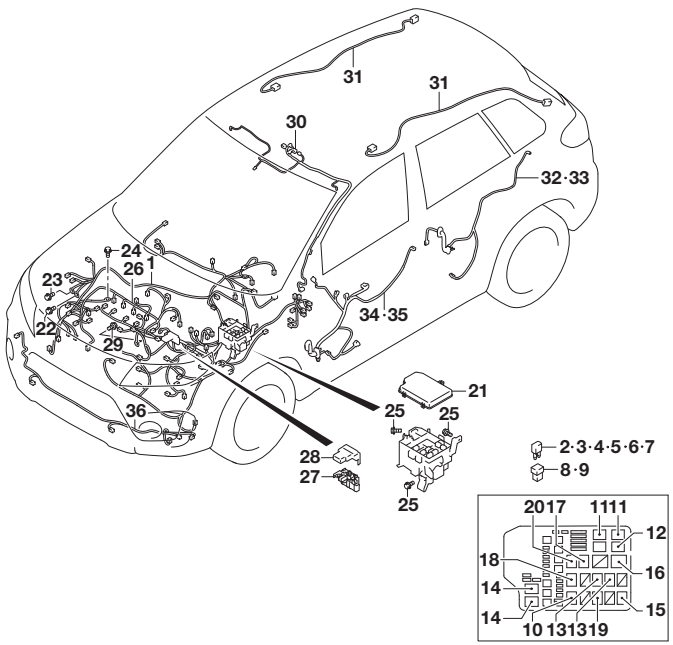

FIG.34NH (2-G-2) WIRING HARNESS FRONT SIDE (TYPE 4:RHD)

REF NO.	PART NO.	DESCRIPTION	Q'TY	REMARKS
1-1	36610-86R30	HARNESS ASSY, MAIN	1	6MT:GL:2WD
1-2	36610-86R50	HARNESS ASSY, MAIN	1	6MT:GL:4WD
1-3	36610-86R00	HARNESS ASSY, MAIN	1	6MT:GLX
1-4	36610-86R60	HARNESS ASSY, MAIN	1	6AT:GL:2WD
1-5	36610-86R70	HARNESS ASSY, MAIN	1	6AT:GL:4WD
1-6	36610-86R10	HARNESS ASSY, MAIN	1	6AT:GLX
2	09481-07504	.FUSE (7.5A)	2	
3	09481-10504	.FUSE (10A)	2	
4-1	09481-15504	.FUSE (15A)	4	6MT
4-2	09481-15504	.FUSE (15A)	5	6AT
5	09481-20504	.FUSE (20A)	3	
6	09481-25504	.FUSE (25A)	3	
7-1	09481-30504	.FUSE (30A)	3	6MT:GL:2WD
7-2	09481-30504	.FUSE (30A)	3	6MT:GL:4WD
7-3	09481-30504	.FUSE (30A)	3	6MT:GLX
7-4	09481-30504	.FUSE (30A)	4	6AT:GL:2WD
7-5	09481-30504	.FUSE (30A)	3	6AT:GL:4WD
7-6	09481-30504	.FUSE (30A)	4	6AT:GLX
8	09481-30403	.FUSE (30A)	4	
9	09481-40403	.FUSE (40A)	2	
10	38860-76F01	.RELAY ASSY	1	ST
11	38860-76F01	.RELAY ASSY	2	RDTR
12	38860-78F00	.RELAY ASSY	1	RDTR
13	38860-76F01	.RELAY ASSY	2	HEAD LAMP
14	38860-78F00	.RELAY ASSY	2	GLX
				WIPER
15	38860-76F01	RELAY ASSY	1	STARTER 2
16	38860-55P00	RELAY ASSY	1	MAIN
17	38860-76F01	RELAY ASSY	1	FUEL PUMP
18	38860-76F01	RELAY ASSY	1	FR FOG
19	38860-76F01	RELAY ASSY	1	6AT
				BACK UP LAMP
20	38860-76F01	RELAY ASSY	1	A/C
21	36717-74S00	COVER, RELAY BOX	1	
22	09115-06005	BOLT (6X16)	4	
23	09115-06005	BOLT (6X16)	1	

FIG.34NH

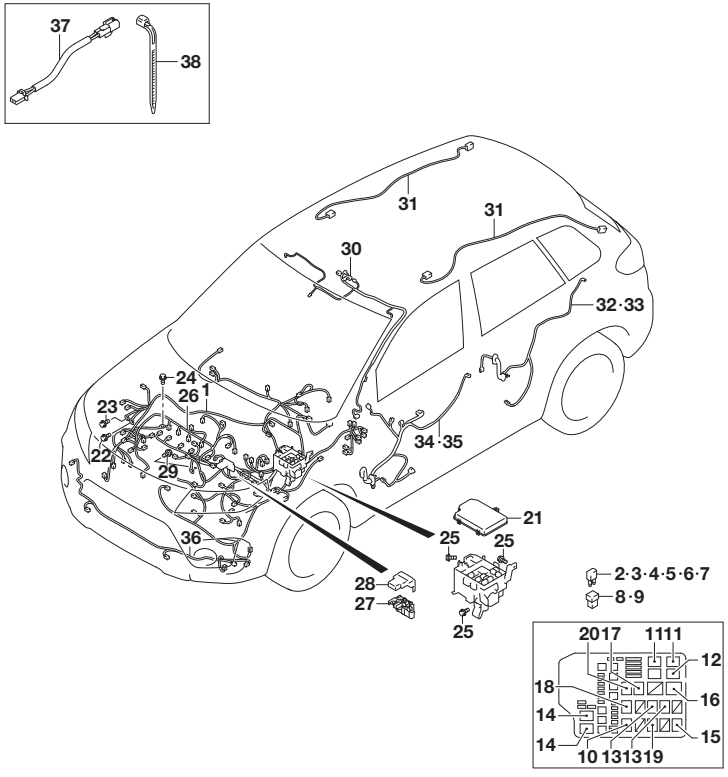

FIG.34NH (2-G-3) WIRING HARNESS FRONT SIDE (TYPE 4:RHD)

REF NO.	PART NO.	DESCRIPTION	Q'TY	REMARKS
24	01550-0612C	BOLT	1	
25	02162-0616A	SCREW	3	
26-1	36605-86R00	HARNESS ASSY, ENG	1	6MT:2WD
26-2	36605-86R20	HARNESS ASSY, ENG	1	6MT:4WD
26-3	36605-86R10	HARNESS ASSY, ENG	1	6AT:2WD
26-4	36605-86R30	HARNESS ASSY, ENG	1	6AT:4WD
27	36739-61M00	.FUSE, BATTERY	1	
28	36694-66M00	COVER, BTRY TERMINAL	1	
29	01550-0612A	BOLT	1	
30-1	36820-54PB0	WIRE, DOME LAMP	1	GL:2WD
30-2	36820-86R20	WIRE, DOME LAMP	1	GL:4WD
30-3	36820-86R50	WIRE, DOME LAMP	1	GLX:N/SUNROOF
30-4	36820-86R70	WIRE, DOME LAMP	1	GLX:W/SUNROOF
31	36821-54P00	WIRE, RR DOME LAMP	2	GLX:W/SUNROOF
32	36751-54P30	WIRE, RR DR RH SIDE	1	
33	36751-54PD0	WIRE, RR DR LH SIDE	1	
34-1	36756-54PA0	WIRE, P/W MAIN	1	GL:N/AEB CAMERA
34-2	36756-86RA0	WIRE, P/W MAIN	1	GL:W/AEB MONAURAL CAMERA
34-3	36756-86RB0	WIRE, P/W MAIN	1	GLX
35-1	36757-54PA0	WIRE, P/W SUB	1	GL:N/AEB CAMERA
35-2	36757-86RA0	WIRE, P/W SUB	1	GL:W/AEB MONAURAL CAMERA
35-3	36757-86RB0	WIRE, P/W SUB	1	GLX
36-1	36813-86RE0	WIRE, FR BUMPER	1	W/HALOGEN HEADLAMP
36-2	36813-86RF0	WIRE, FR BUMPER	1	W/LED HEADLAMP
37	36691-61M10	WIRE, A/B	1	OPT
38	09407-18402	CLAMP (L:165)	5	OPT

FIG.34PA

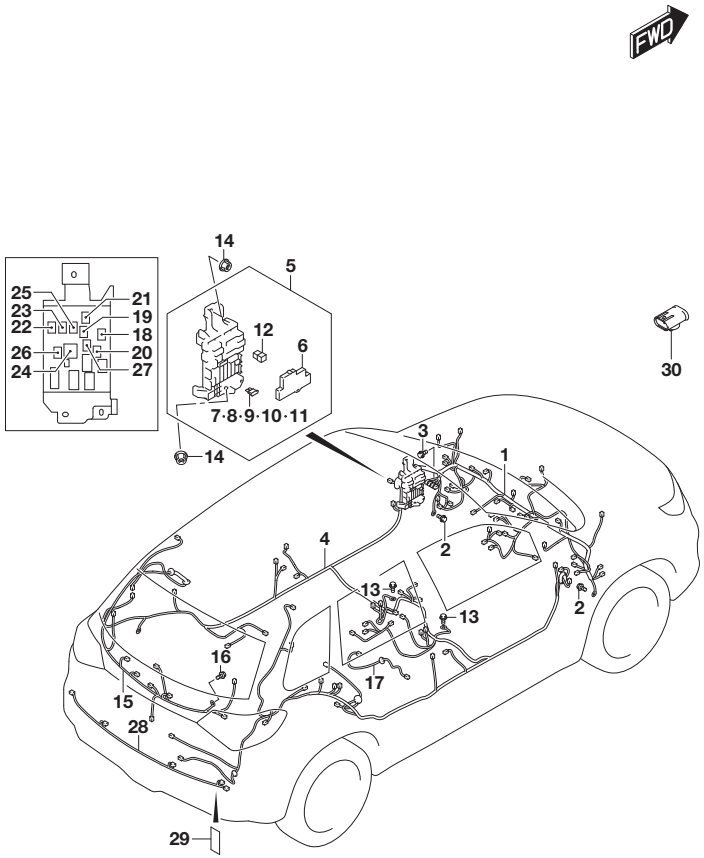

FIG.34PA (2-G-4) WIRING HARNESS REAR SIDE (TYPE 3:LHD:K10C)

REF NO.	PART NO.	DESCRIPTION	Q'TY	REMARKS
1-1	36602-86R00	HARNESS ASSY, I/P	1	2WD:GL:N/AIR CON
1-2	36602-86R10	HARNESS ASSY, I/P	1	2WD:GL:W/AUTO AIR CON
1-3	36602-86R20	HARNESS ASSY, I/P	1	2WD:GLX
1-4	36602-86R40	HARNESS ASSY, I/P	1	4WD:GL:N/AIR CON
1-5	36602-86R30	HARNESS ASSY, I/P	1	4WD:GL:W/AUTO AIR CON
1-6	36602-86R50	HARNESS ASSY, I/P	1	4WD:GLX
2	09115-06005	BOLT (6X16)	3	
3	02162-0612A	SCREW	1	
4-1	36603-86R00	HARNESS ASSY, FL	1	2WD:GL:N/SEAT HEATER: N/LUGGAGE ROOM LAMP
4-2	36603-86R20	HARNESS ASSY, FL	1	2WD:GL:N/SEAT HEATER: W/LUGGAGE ROOM LAMP
4-3	36603-86R10	HARNESS ASSY, FL	1	2WD:GL:W/SEAT HEATER: N/LUGGAGE ROOM LAMP
4-4	36603-86R30	HARNESS ASSY, FL	1	2WD:GL:W/SEAT HEATER: W/LUGGAGE ROOM LAMP
4-5	36603-86R40	HARNESS ASSY, FL	1	2WD:GLX:N/SEAT HEATER
4-6	36603-86R50	HARNESS ASSY, FL	1	2WD:GLX:W/SEAT HEATER
4-7	36603-86R60	HARNESS ASSY, FL	1	4WD:GL:N/SEAT HEATER: N/LUGGAGE ROOM LAMP
4-8	36603-86R80	HARNESS ASSY, FL	1	4WD:GL:N/SEAT HEATER: W/LUGGAGE ROOM LAMP
4-9	36603-86R70	HARNESS ASSY, FL	1	4WD:GL:W/SEAT HEATER: N/LUGGAGE ROOM LAMP
4-10	36603-86R90	HARNESS ASSY, FL	1	4WD:GL:W/SEAT HEATER: W/LUGGAGE ROOM LAMP

FIG.34PB(2-G-6) WIRING HARNESS REAR SIDE (TYPE 3:LHD:K14C)
FIG.34PC(2-G-8) WIRING HARNESS REAR SIDE (TYPE 3:LHD:K14D)
FIG.34PD(2-G-10) WIRING HARNESS REAR SIDE (TYPE 3:RHD:K10C)
FIG.34PE(2-G-12) WIRING HARNESS REAR SIDE (TYPE 3:RHD:K14C)
FIG.34PF(2-G-14) WIRING HARNESS REAR SIDE (TYPE 3:RHD:K14D)
FIG.34PG(2-H-2) WIRING HARNESS REAR SIDE (TYPE 4:LHD)
FIG.34PH(2-H-4) WIRING HARNESS REAR SIDE (TYPE 4:RHD)

FIG.34PA

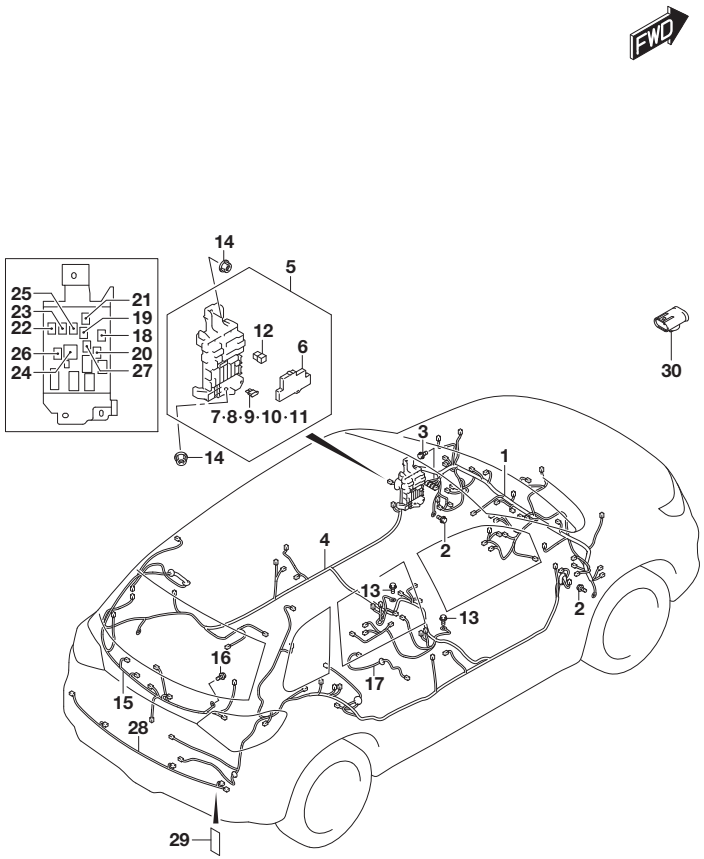

FIG.34PA (2-G-5) WIRING HARNESS REAR SIDE (TYPE 3:LHD:K10C)

REF NO.	PART NO.	DESCRIPTION	Q'TY	REMARKS
4-11	36603-86RA0	HARNESS ASSY, FL	1	4WD:GLX:N/SEAT HEATER
4-12	36603-86RB0	HARNESS ASSY, FL	1	4WD:GLX:W/SEAT HEATER
5-1	36710-61M00	.BOX ASSY, JUNCTION	1	N/PUSH START
5-2	36710-61M10	.BOX ASSY, JUNCTION	1	W/PUSH START
6	36717-61MP0	..COVER, FUSE	1	
7	09481-07504	..FUSE (7.5A)	6	
8	09481-10504	..FUSE (10A)	12	
9	09481-15504	..FUSE (15A)	9	
10	09481-20504	..FUSE (20A)	5	
11	09481-30504	..FUSE (30A)	1	
12	09481-30403	..FUSE (30A)	1	
13	09115-06005	BOLT (6X16)	4	
14	08316-1008A	NUT	2	
15-1	36680-86RC0	HARNESS ASSY, BK DR	1	N/BACK CAMERA
15-2	36680-86RD0	HARNESS ASSY, BK DR	1	W/BACK CAMERA
16	09115-06005	BOLT (6X16)	1	
17	36840-61M00	WIRE, FUEL PUMP	1	
18	38860-76F01	RELAY ASSY	1	HTR
19	38860-76F01	RELAY ASSY	1	HORN
20	38860-76F01	RELAY ASSY	1	RR DEF
21	38860-76F01	RELAY ASSY	1	TAIL
22	38860-76F01	RELAY ASSY	1	DRL
23	38860-76F01	RELAY ASSY	1	RR FOG
24	38860-57L00	RELAY ASSY	1	W/PUSH START IGN 2
25	38860-76F01	RELAY ASSY	1	W/PUSH START ACC
26	38860-76F01	RELAY ASSY	1	W/PUSH START IGN 1
27	38860-76F01	RELAY ASSY	1	REAR WIPER
28	36813-54P00	WIRE, RR PARK SNSR	1	GLX
29	36930-82010	COVER, HARNESS	2	
30	36696-68L00	CAP, A/C HARN	1	N/AIR CON

FIG.34PB

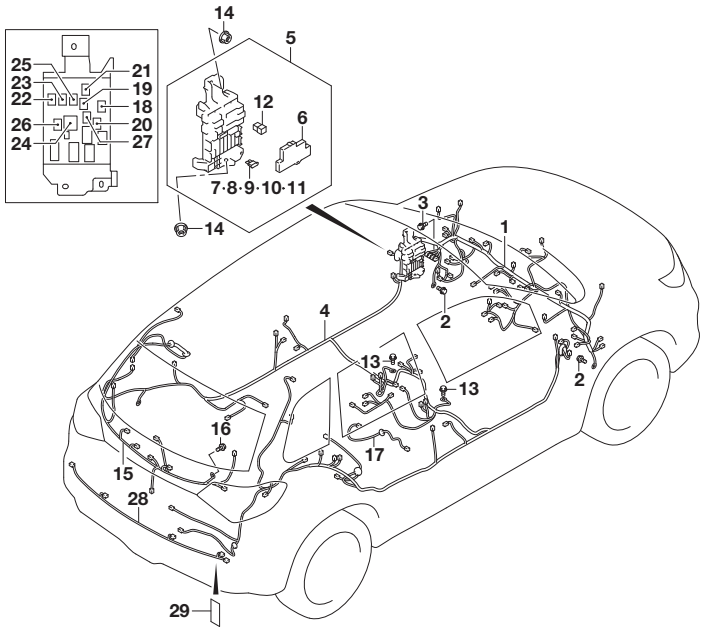

FIG.34PB (2-G-6) WIRING HARNESS REAR SIDE (TYPE 3:LHD:K14C)

REF NO.	PART NO.	DESCRIPTION	Q'TY	REMARKS
1-1	36602-86R10	HARNESS ASSY, I/P	1	2WD:GL
1-2	36602-86R20	HARNESS ASSY, I/P	1	2WD:GLX
1-3	36602-86R30	HARNESS ASSY, I/P	1	4WD:GL
1-4	36602-86R50	HARNESS ASSY, I/P	1	4WD:GLX
2	09115-06005	BOLT (6X16)	3	
3	02162-0612A	SCREW	1	
4-1	36603-86R20	HARNESS ASSY, FL	1	2WD:GL:N/SEAT HEATER
4-2	36603-86R30	HARNESS ASSY, FL	1	2WD:GL:W/SEAT HEATER
4-3	36603-86R40	HARNESS ASSY, FL	1	2WD:GLX:N/SEAT HEATER
4-4	36603-86R50	HARNESS ASSY, FL	1	2WD:GLX:W/SEAT HEATER
4-5	36603-86R80	HARNESS ASSY, FL	1	4WD:GL:N/SEAT HEATER
4-6	36603-86R90	HARNESS ASSY, FL	1	4WD:GL:W/SEAT HEATER
4-7	36603-86RA0	HARNESS ASSY, FL	1	4WD:GLX:N/SEAT HEATER
4-8	36603-86RB0	HARNESS ASSY, FL	1	4WD:GLX:W/SEAT HEATER
5-1	36710-61M00	.BOX ASSY, JUNCTION	1	N/PUSH START
5-2	36710-61M10	.BOX ASSY, JUNCTION	1	W/PUSH START
6	36717-61MP0	..COVER, FUSE	1	
7	09481-07504	..FUSE (7.5A)	6	
8	09481-10504	..FUSE (10A)	12	
9	09481-15504	..FUSE (15A)	9	
10	09481-20504	..FUSE (20A)	5	
11	09481-30504	..FUSE (30A)	1	
12	09481-30403	..FUSE (30A)	1	
13	09115-06005	BOLT (6X16)	4	
14	08316-1008A	NUT	2	
15-1	36680-86RC0	HARNESS ASSY, BK DR	1	N/BACK CAMERA
15-2	36680-86RD0	HARNESS ASSY, BK DR	1	W/BACK CAMERA
16	09115-06005	BOLT (6X16)	1	
17	36840-61M00	WIRE, FUEL PUMP	1	
18	38860-76F01	RELAY ASSY	1	HTR
19	38860-76F01	RELAY ASSY	1	HORN
20	38860-76F01	RELAY ASSY	1	RR DEF
21	38860-76F01	RELAY ASSY	1	TAIL
22	38860-76F01	RELAY ASSY	1	DRL
23	38860-76F01	RELAY ASSY	1	RR FOG

FIG.34PB

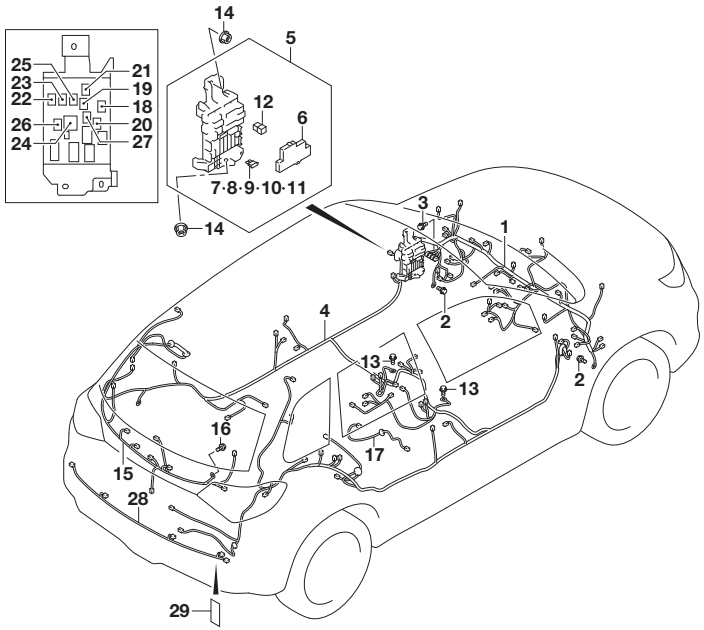

FIG.34PB (2-G-7) WIRING HARNESS REAR SIDE (TYPE 3:LHD:K14C)

REF NO.	PART NO.	DESCRIPTION	Q'TY	REMARKS
24	38860-57L00	RELAY ASSY	1	W/PUSH START IGN 2
25	38860-76F01	RELAY ASSY	1	W/PUSH START ACC
26	38860-76F01	RELAY ASSY	1	W/PUSH START IGN 1
27	38860-76F01	RELAY ASSY	1	REAR WIPER
28	36813-54P00	WIRE, RR PARK SNSR	1	GLX
29	36930-82010	COVER, HARNESS	2	

FIG.34PC

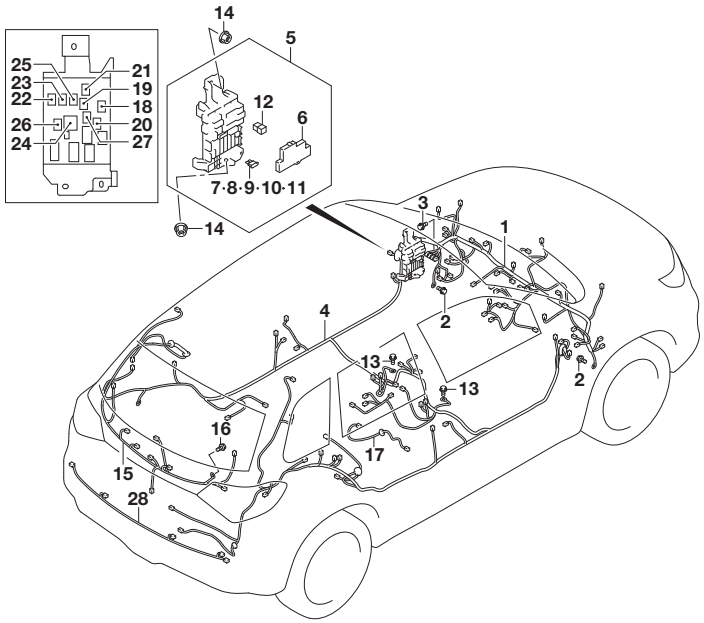

FIG.34PC (2-G-8) WIRING HARNESS REAR SIDE (TYPE 3:LHD:K14D)

REF NO.	PART NO.	DESCRIPTION	Q'TY	REMARKS
1-1	36602-74S00	HARNESS ASSY, I/P	1	2WD:GL:N/AEB CAMERA
1-2	36602-74S40	HARNESS ASSY, I/P	1	2WD:GL:W/AEB MONAURAL CAMERA: N/BLIND SPOT WARNING
1-3	36602-74S50	HARNESS ASSY, I/P	1	2WD:GL:W/AEB MONAURAL CAMERA: W/BLIND SPOT WARNING
1-4	36602-74S10	HARNESS ASSY, I/P	1	2WD:GLX
1-5	36602-74S20	HARNESS ASSY, I/P	1	4WD:GL
1-6	36602-74S30	HARNESS ASSY, I/P	1	4WD:GLX
2	09115-06005	BOLT (6X16)	3	
3	02162-0612A	SCREW	1	
4-1	36603-74S00	HARNESS ASSY, FL	1	2WD:GL:N/AEB CAMERA: N/SEAT HEATER
4-2	36603-74S10	HARNESS ASSY, FL	1	2WD:GL:N/AEB CAMERA: W/SEAT HEATER
4-3	36603-74S80	HARNESS ASSY, FL	1	2WD:GL:W/AEB MONAURAL CAMERA: N/BLIND SPOT WARNING: N/SEAT HEATER
4-4	36603-74S90	HARNESS ASSY, FL	1	2WD:GL:W/AEB MONAURAL CAMERA: N/BLIND SPOT WARNING: W/SEAT HEATER
4-5	36603-74SA0	HARNESS ASSY, FL	1	2WD:GL:W/AEB MONAURAL CAMERA: W/BLIND SPOT WARNING: N/SEAT HEATER
4-6	36603-74SB0	HARNESS ASSY, FL	1	2WD:GL:W/AEB MONAURAL CAMERA: W/BLIND SPOT WARNING: W/SEAT HEATER
4-7	36603-74S20	HARNESS ASSY, FL	1	2WD:GLX:N/SEAT HEATER
4-8	36603-74S30	HARNESS ASSY, FL	1	2WD:GLX:W/SEAT HEATER
4-9	36603-74S40	HARNESS ASSY, FL	1	4WD:GL:N/SEAT HEATER
4-10	36603-74S50	HARNESS ASSY, FL	1	4WD:GL:W/SEAT HEATER
4-11	36603-74S60	HARNESS ASSY, FL	1	4WD:GLX:N/SEAT HEATER
4-12	36603-74S70	HARNESS ASSY, FL	1	4WD:GLX:W/SEAT HEATER
5-1	36710-61M00	.BOX ASSY, JUNCTION	1	N/PUSH START
5-2	36710-61M10	.BOX ASSY, JUNCTION	1	W/PUSH START
6	36717-61MP0	..COVER, FUSE	1	
7	09481-07504	..FUSE (7.5A)	6	

FIG.34PC

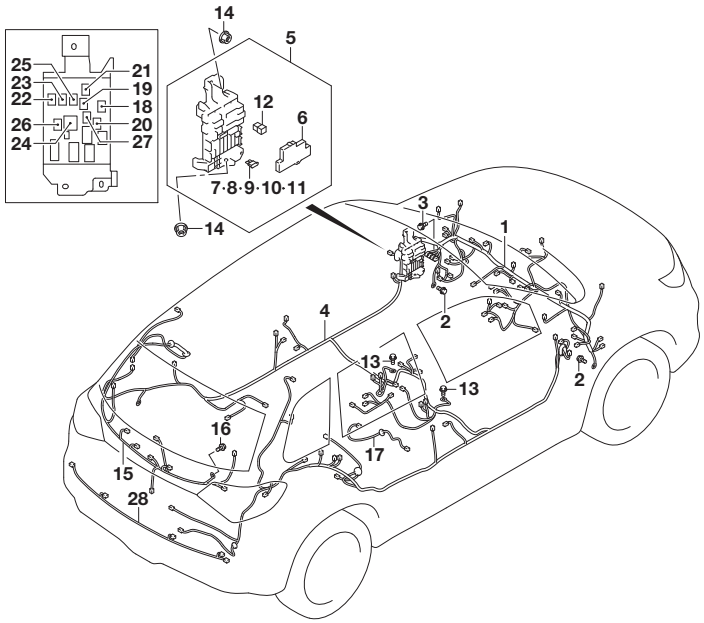

FIG.34PC (2-G-9) WIRING HARNESS REAR SIDE (TYPE 3:LHD:K14D)

REF NO.	PART NO.	DESCRIPTION	Q'TY	REMARKS
8	09481-10504	..FUSE (10A)	12	
9	09481-15504	..FUSE (15A)	9	
10	09481-20504	..FUSE (20A)	5	
11	09481-30504	..FUSE (30A)	1	
12	09481-30403	..FUSE (30A)	1	
13	09115-06005	BOLT (6X16)	4	
14	08316-1008A	NUT	2	
15-1	36680-74SC0	HARNESS ASSY, BK DR	1	N/BACK CAMERA
15-2	36680-74SD0	HARNESS ASSY, BK DR	1	W/BACK CAMERA
16	09115-06005	BOLT (6X16)	1	
17	36840-61M00	WIRE, FUEL PUMP	1	
18	38860-76F01	RELAY ASSY	1	HTR
19	38860-76F01	RELAY ASSY	1	HORN
20	38860-76F01	RELAY ASSY	1	RR DEF
21	38860-76F01	RELAY ASSY	1	TAIL
22	38860-76F01	RELAY ASSY	1	DRL
23	38860-76F01	RELAY ASSY	1	RR FOG
24	38860-57L00	RELAY ASSY	1	W/PUSH START IGN 2
25	38860-76F01	RELAY ASSY	1	W/PUSH START ACC
26	38860-76F01	RELAY ASSY	1	W/PUSH START IGN 1
27	38860-76F01	RELAY ASSY	1	REAR WIPER
28	36813-54P00	WIRE, RR PARK SNSR	1	GLX

FIG.34PD

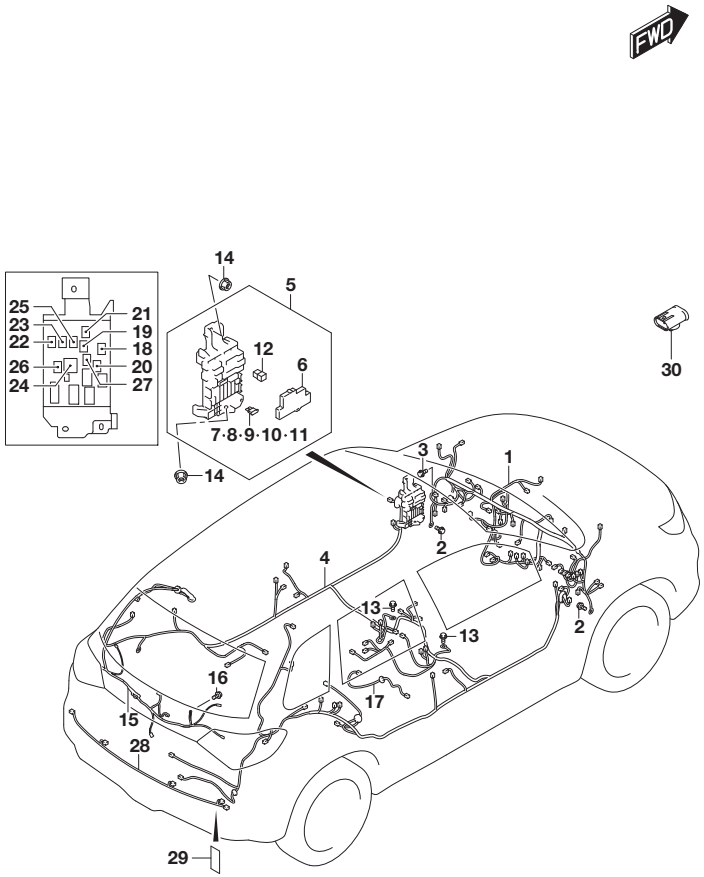

FIG.34PD (2-G-10) WIRING HARNESS REAR SIDE (TYPE 3:RHD:K10C)

REF NO.	PART NO.	DESCRIPTION	Q'TY	REMARKS
1-1	36620-86R00	HARNESS ASSY, I/P	1	2WD:GL:N/AIR CON
1-2	36620-86R10	HARNESS ASSY, I/P	1	2WD:GL:W/AUTO AIR CON
1-3	36620-86R20	HARNESS ASSY, I/P	1	2WD:GLX
1-4	36620-86R30	HARNESS ASSY, I/P	1	4WD:GL
1-5	36620-86R50	HARNESS ASSY, I/P	1	4WD:GLX
2	09115-06005	BOLT (6X16)	3	
3	02162-0612A	SCREW	1	
4-1	36630-86R00	HARNESS ASSY, FL	1	2WD:GL:N/LUGGAGE ROOM LAMP
4-2	36630-86R20	HARNESS ASSY, FL	1	2WD:GL:W/LUGGAGE ROOM LAMP
4-3	36630-86R40	HARNESS ASSY, FL	1	2WD:GLX
4-4	36630-86R80	HARNESS ASSY, FL	1	4WD:GL
4-5	36630-86RA0	HARNESS ASSY, FL	1	4WD:GLX
5-1	36710-61M00	.BOX ASSY, JUNCTION	1	N/PUSH START
5-2	36710-61M10	.BOX ASSY, JUNCTION	1	W/PUSH START
6	36717-61MP0	..COVER, FUSE	1	
7	09481-07504	..FUSE (7.5A)	6	
8	09481-10504	..FUSE (10A)	12	
9	09481-15504	..FUSE (15A)	9	
10	09481-20504	..FUSE (20A)	5	
11	09481-30504	..FUSE (30A)	1	
12	09481-30403	..FUSE (30A)	1	
13	09115-06005	BOLT (6X16)	4	
14	08316-1008A	NUT	2	
15-1	36680-86R20	HARNESS ASSY, BK DR	1	N/BACK CAMERA
15-2	36680-86R30	HARNESS ASSY, BK DR	1	W/BACK CAMERA
16	09115-06005	BOLT (6X16)	1	
17	36840-61M00	WIRE, FUEL PUMP	1	
18	38860-76F01	RELAY ASSY	1	HTR
19	38860-76F01	RELAY ASSY	1	HORN
20	38860-76F01	RELAY ASSY	1	RR DEF
21	38860-76F01	RELAY ASSY	1	TAIL
22	38860-76F01	RELAY ASSY	1	DRL
23	38860-76F01	RELAY ASSY	1	RR FOG
24	38860-57L00	RELAY ASSY	1	W/PUSH START
				IGN 2

FIG.34PD

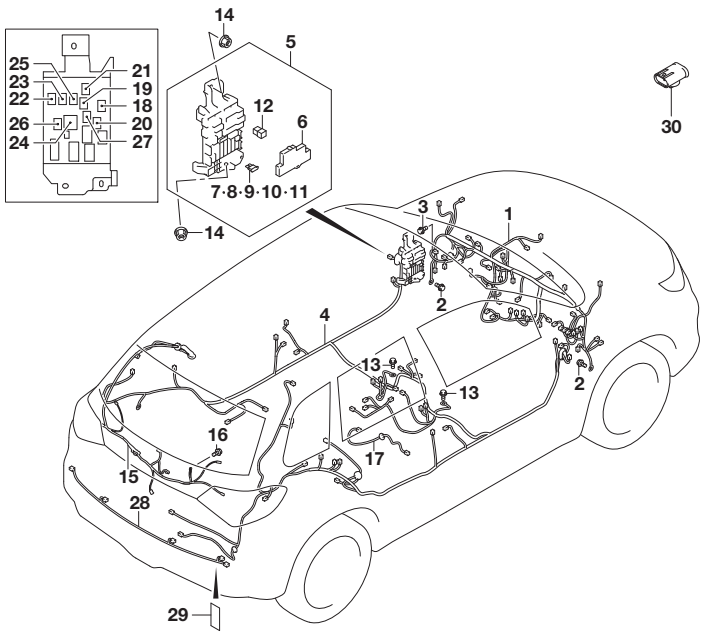

FIG.34PD (2-G-11) WIRING HARNESS REAR SIDE (TYPE 3:RHD:K10C)

REF NO.	PART NO.	DESCRIPTION	Q'TY	REMARKS
25	38860-76F01	RELAY ASSY	1	W/PUSH START ACC
26	38860-76F01	RELAY ASSY	1	W/PUSH START IGN 1
27	38860-76F01	RELAY ASSY	1	REAR WIPER
28	36813-54P00	WIRE, RR PARK SNSR	1	GLX
29	36930-82010	COVER, HARNESS	2	
30	36696-68L00	CAP, A/C HARN	1	N/AIR CON

FIG.34PE

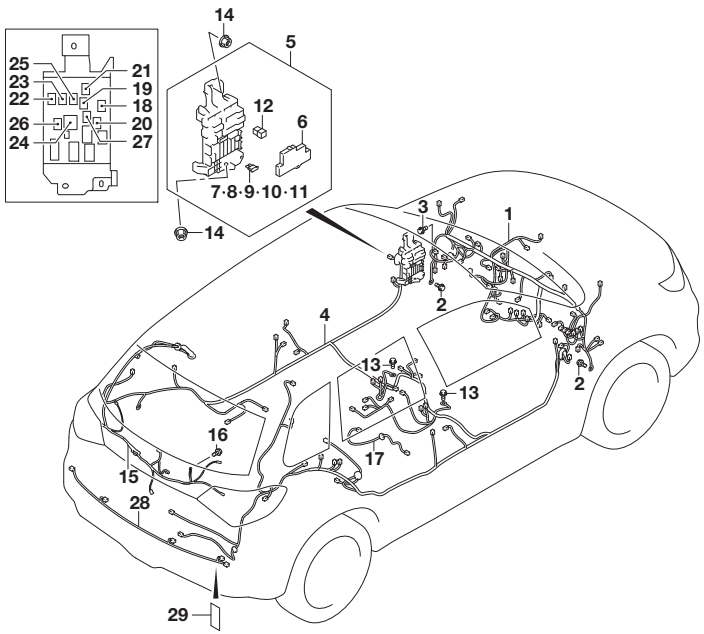

FIG.34PE (2-G-12) WIRING HARNESS REAR SIDE (TYPE 3:RHD:K14C)

REF NO.	PART NO.	DESCRIPTION	Q'TY	REMARKS
1-1	36620-86R10	HARNESS ASSY, I/P	1	2WD:GL
1-2	36620-86R20	HARNESS ASSY, I/P	1	2WD:GLX
1-3	36620-86R30	HARNESS ASSY, I/P	1	4WD:GL
1-4	36620-86R50	HARNESS ASSY, I/P	1	4WD:GLX
2	09115-06005	BOLT (6X16)	3	
3	02162-0612A	SCREW	1	
4-1	36630-86R20	HARNESS ASSY, FL	1	2WD:GL
4-2	36630-86R40	HARNESS ASSY, FL	1	2WD:GLX
4-3	36630-86R80	HARNESS ASSY, FL	1	4WD:GL
4-4	36630-86RA0	HARNESS ASSY, FL	1	4WD:GLX
5-1	36710-61M00	.BOX ASSY, JUNCTION	1	N/PUSH START
5-2	36710-61M10	.BOX ASSY, JUNCTION	1	W/PUSH START
6	36717-61MP0	..COVER, FUSE	1	
7	09481-07504	..FUSE (7.5A)	6	
8	09481-10504	..FUSE (10A)	12	
9	09481-15504	..FUSE (15A)	9	
10	09481-20504	..FUSE (20A)	5	
11	09481-30504	..FUSE (30A)	1	
12	09481-30403	..FUSE (30A)	1	
13	09115-06005	BOLT (6X16)	4	
14	08316-1008A	NUT	2	
15-1	36680-86R20	HARNESS ASSY, BK DR	1	N/BACK CAMERA
15-2	36680-86R30	HARNESS ASSY, BK DR	1	W/BACK CAMERA
16	09115-06005	BOLT (6X16)	1	
17	36840-61M00	WIRE, FUEL PUMP	1	
18	38860-76F01	RELAY ASSY	1	HTR
19	38860-76F01	RELAY ASSY	1	HORN
20	38860-76F01	RELAY ASSY	1	RR DEF
21	38860-76F01	RELAY ASSY	1	TAIL
22	38860-76F01	RELAY ASSY	1	DRL
23	38860-76F01	RELAY ASSY	1	RR FOG
24	38860-57L00	RELAY ASSY	1	W/PUSH START IGN 2
25	38860-76F01	RELAY ASSY	1	W/PUSH START ACC

FIG.34PE

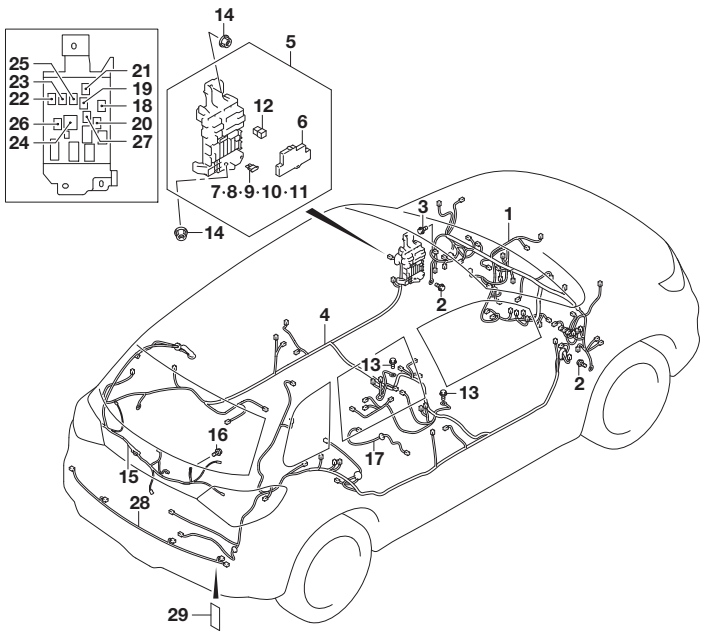

FIG.34PE (2-G-13) WIRING HARNESS REAR SIDE (TYPE 3:RHD:K14C)

REF NO.	PART NO.	DESCRIPTION	Q'TY	REMARKS
26	38860-76F01	RELAY ASSY	1	W/PUSH START IGN 1
27	38860-76F01	RELAY ASSY	1	REAR WIPER
28	36813-54P00	WIRE, RR PARK SNSR	1	GLX
29	36930-82010	COVER, HARNESS	2	

FIG.34PF

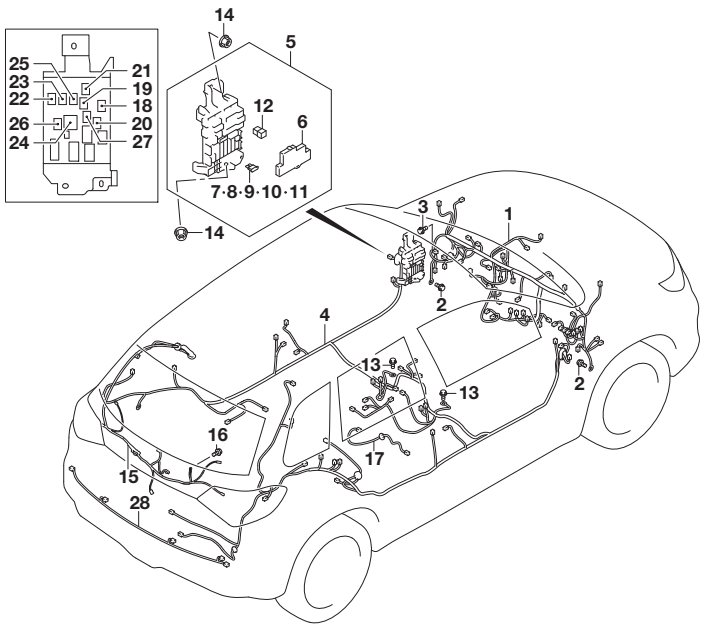

FIG.34PF (2-G-14) WIRING HARNESS REAR SIDE (TYPE 3:RHD:K14D)

REF NO.	PART NO.	DESCRIPTION	Q'TY	REMARKS
1-1	36620-74S00	HARNESS ASSY, I/P	1	2WD:GL:N/AEB CAMERA
1-2	36620-74S40	HARNESS ASSY, I/P	1	2WD:GL:W/AEB MONAURAL CAMERA: N/BLIND SPOT WARNING
1-3	36620-74S50	HARNESS ASSY, I/P	1	2WD:GL:W/AEB MONAURAL CAMERA: W/BLIND SPOT WARNING
1-4	36620-74S10	HARNESS ASSY, I/P	1	2WD:GLX
1-5	36620-74S20	HARNESS ASSY, I/P	1	4WD:GL
1-6	36620-74S30	HARNESS ASSY, I/P	1	4WD:GLX
2	09115-06005	BOLT (6X16)	3	
3	02162-0612A	SCREW	1	
4-1	36630-74S00	HARNESS ASSY, FL	1	2WD:GL:N/AEB CAMERA
4-2	36630-74S40	HARNESS ASSY, FL	1	2WD:GL:W/AEB MONAURAL CAMERA: N/BLIND SPOT WARNING
4-3	36630-74S50	HARNESS ASSY, FL	1	2WD:GL:W/AEB MONAURAL CAMERA: W/BLIND SPOT WARNING
4-4	36630-74S10	HARNESS ASSY, FL	1	2WD:GLX
4-5	36630-74S20	HARNESS ASSY, FL	1	4WD:GL
4-6	36630-74S30	HARNESS ASSY, FL	1	4WD:GLX
5-1	36710-61M00	.BOX ASSY, JUNCTION	1	N/PUSH START
5-2	36710-61M10	.BOX ASSY, JUNCTION	1	W/PUSH START
6	36717-61MP0	..COVER, FUSE	1	
7	09481-07504	..FUSE (7.5A)	6	
8	09481-10504	..FUSE (10A)	12	
9	09481-15504	..FUSE (15A)	9	
10	09481-20504	..FUSE (20A)	5	
11	09481-30504	..FUSE (30A)	1	
12	09481-30403	..FUSE (30A)	1	
13	09115-06005	BOLT (6X16)	4	
14	08316-1008A	NUT	2	
15-1	36680-74S20	HARNESS ASSY, BK DR	1	N/BACK CAMERA
15-2	36680-74S30	HARNESS ASSY, BK DR	1	W/BACK CAMERA
16	09115-06005	BOLT (6X16)	1	
17	36840-61M00	WIRE, FUEL PUMP	1	
18	38860-76F01	RELAY ASSY	1	HTR
19	38860-76F01	RELAY ASSY	1	HORN
20	38860-76F01	RELAY ASSY	1	RR DEF

FIG.34PF

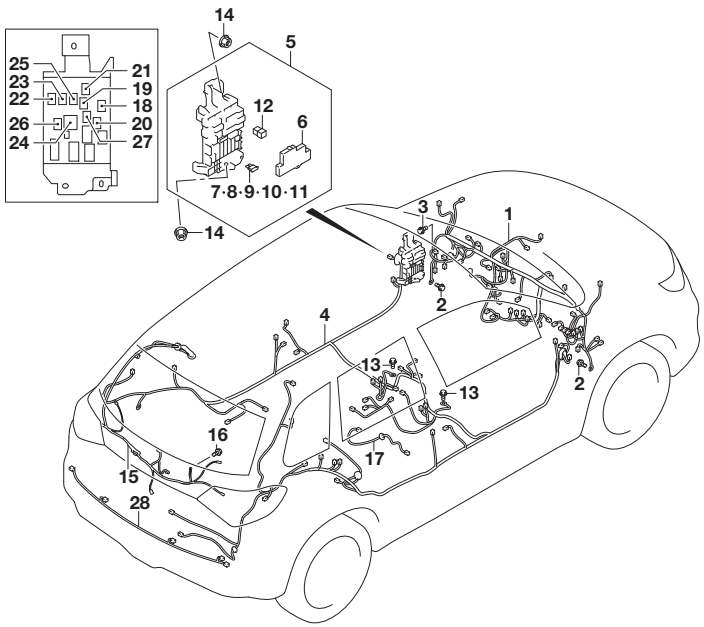

FIG.34PF (2-G-15) WIRING HARNESS REAR SIDE (TYPE 3:RHD:K14D)

REF NO.	PART NO.	DESCRIPTION	Q'TY	REMARKS
21	38860-76F01	RELAY ASSY	1	TAIL
22	38860-76F01	RELAY ASSY	1	DRL
23	38860-76F01	RELAY ASSY	1	RR FOG
24	38860-57L00	RELAY ASSY	1	W/PUSH START IGN 2
25	38860-76F01	RELAY ASSY	1	W/PUSH START ACC
26	38860-76F01	RELAY ASSY	1	W/PUSH START IGN 1
27	38860-76F01	RELAY ASSY	1	REAR WIPER
28	36813-54P00	WIRE, RR PARK SNSR	1	GLX

FIG.34PG

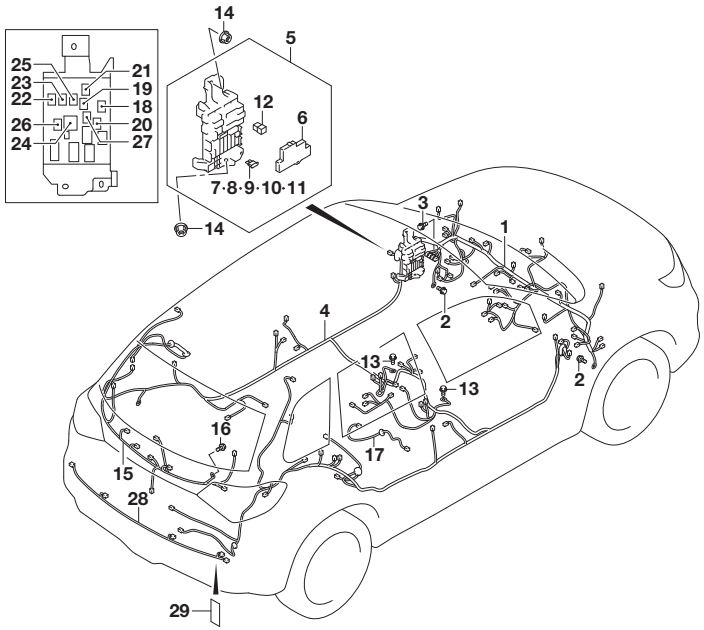

FIG.34PG (2-H-2) WIRING HARNESS REAR SIDE (TYPE 4:LHD)

REF NO.	PART NO.	DESCRIPTION	Q'TY	REMARKS
1-1	36602-86R10	HARNESS ASSY, I/P	1	2WD:GL
1-2	36602-86R20	HARNESS ASSY, I/P	1	2WD:GLX
1-3	36602-86R30	HARNESS ASSY, I/P	1	4WD:GL
1-4	36602-86R50	HARNESS ASSY, I/P	1	4WD:GLX
2	09115-06005	BOLT (6X16)	3	
3	02162-0612A	SCREW	1	
4-1	36603-86R20	HARNESS ASSY, FL	1	2WD:GL:N/SEAT HEATER
4-2	36603-86R30	HARNESS ASSY, FL	1	2WD:GL:W/SEAT HEATER
4-3	36603-86R40	HARNESS ASSY, FL	1	2WD:GLX:N/SEAT HEATER
4-4	36603-86R50	HARNESS ASSY, FL	1	2WD:GLX:W/SEAT HEATER
4-5	36603-86R80	HARNESS ASSY, FL	1	4WD:GL:N/SEAT HEATER
4-6	36603-86R90	HARNESS ASSY, FL	1	4WD:GL:W/SEAT HEATER
4-7	36603-86RA0	HARNESS ASSY, FL	1	4WD:GLX:N/SEAT HEATER
4-8	36603-86RB0	HARNESS ASSY, FL	1	4WD:GLX:W/SEAT HEATER
5-1	36710-61M00	.BOX ASSY, JUNCTION	1	N/PUSH START
5-2	36710-61M10	.BOX ASSY, JUNCTION	1	W/PUSH START
6	36717-61MP0	..COVER, FUSE	1	
7	09481-07504	..FUSE (7.5A)	6	
8	09481-10504	..FUSE (10A)	12	
9	09481-15504	..FUSE (15A)	9	
10	09481-20504	..FUSE (20A)	5	
11	09481-30504	..FUSE (30A)	1	
12	09481-30403	..FUSE (30A)	1	
13	09115-06005	BOLT (6X16)	4	
14	08316-1008A	NUT	2	
15-1	36680-86RC0	HARNESS ASSY, BK DR	1	N/BACK CAMERA
15-2	36680-86RD0	HARNESS ASSY, BK DR	1	W/BACK CAMERA
16	09115-06005	BOLT (6X16)	1	
17	36840-61M00	WIRE, FUEL PUMP	1	
18	38860-76F01	RELAY ASSY	1	HTR
19	38860-76F01	RELAY ASSY	1	HORN
20	38860-76F01	RELAY ASSY	1	RR DEF
21	38860-76F01	RELAY ASSY	1	TAIL
22	38860-76F01	RELAY ASSY	1	DRL
23	38860-76F01	RELAY ASSY	1	RR FOG

FIG.34PG

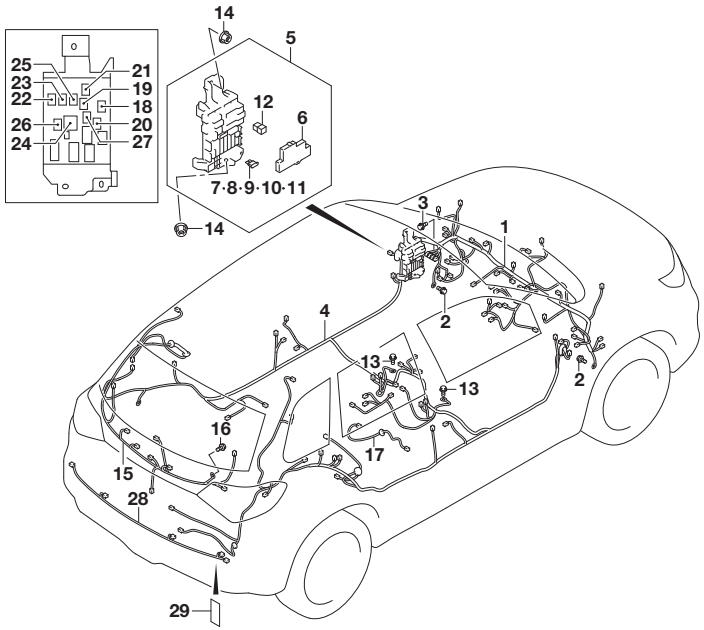

FIG.34PG (2-H-3) WIRING HARNESS REAR SIDE (TYPE 4:LHD)

REF NO.	PART NO.	DESCRIPTION	Q'TY	REMARKS
24	38860-57L00	RELAY ASSY	1	W/PUSH START IGN 2
25	38860-76F01	RELAY ASSY	1	W/PUSH START ACC
26	38860-76F01	RELAY ASSY	1	W/PUSH START IGN 1
27	38860-76F01	RELAY ASSY	1	REAR WIPER
28	36813-54P00	WIRE, RR PARK SNSR	1	GLX
29	36930-82010	COVER, HARNESS	2	

FIG.34PH

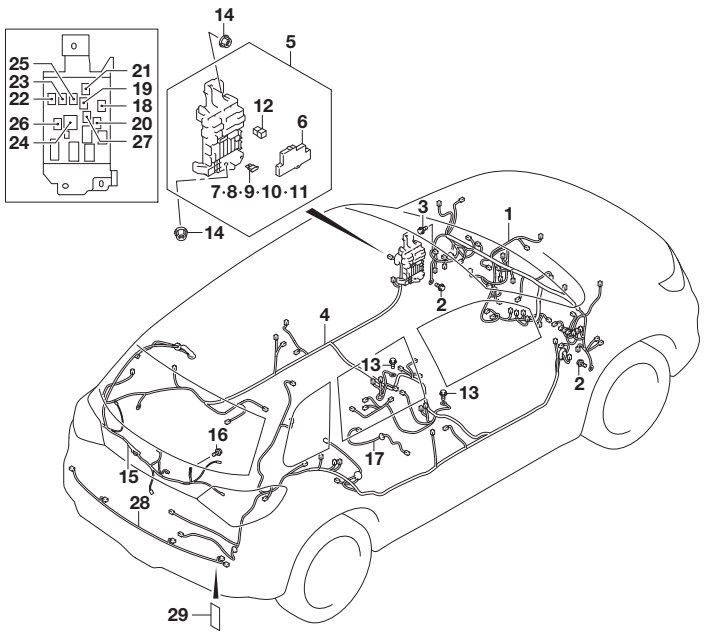

FIG.34PH (2-H-4) WIRING HARNESS REAR SIDE (TYPE 4:RHD)

REF NO.	PART NO.	DESCRIPTION	Q'TY	REMARKS
1-1	36620-86R10	HARNESS ASSY, I/P	1	2WD:GL
1-2	36620-86R20	HARNESS ASSY, I/P	1	2WD:GLX
1-3	36620-86R30	HARNESS ASSY, I/P	1	4WD:GL
1-4	36620-86R50	HARNESS ASSY, I/P	1	4WD:GLX
2	09115-06005	BOLT (6X16)	3	
3	02162-0612A	SCREW	1	
4-1	36630-86R20	HARNESS ASSY, FL	1	2WD:GL
4-2	36630-86R40	HARNESS ASSY, FL	1	2WD:GLX
4-3	36630-86R80	HARNESS ASSY, FL	1	4WD:GL
4-4	36630-86RA0	HARNESS ASSY, FL	1	4WD:GLX
5-1	36710-61M00	.BOX ASSY, JUNCTION	1	N/PUSH START
5-2	36710-61M10	.BOX ASSY, JUNCTION	1	W/PUSH START
6	36717-61MP0	..COVER, FUSE	1	
7	09481-07504	..FUSE (7.5A)	6	
8	09481-10504	..FUSE (10A)	12	
9	09481-15504	..FUSE (15A)	9	
10	09481-20504	..FUSE (20A)	5	
11	09481-30504	..FUSE (30A)	1	
12	09481-30403	..FUSE (30A)	1	
13	09115-06005	BOLT (6X16)	4	
14	08316-1008A	NUT	2	
15-1	36680-86R20	HARNESS ASSY, BK DR	1	N/BACK CAMERA
15-2	36680-86R30	HARNESS ASSY, BK DR	1	W/BACK CAMERA
16	09115-06005	BOLT (6X16)	1	
17	36840-61M00	WIRE, FUEL PUMP	1	
18	38860-76F01	RELAY ASSY	1	HTR
19	38860-76F01	RELAY ASSY	1	HORN
20	38860-76F01	RELAY ASSY	1	RR DEF
21	38860-76F01	RELAY ASSY	1	TAIL
22	38860-76F01	RELAY ASSY	1	DRL
23	38860-76F01	RELAY ASSY	1	RR FOG
24	38860-57L00	RELAY ASSY	1	W/PUSH START IGN 2
25	38860-76F01	RELAY ASSY	1	W/PUSH START ACC

FIG.34PH

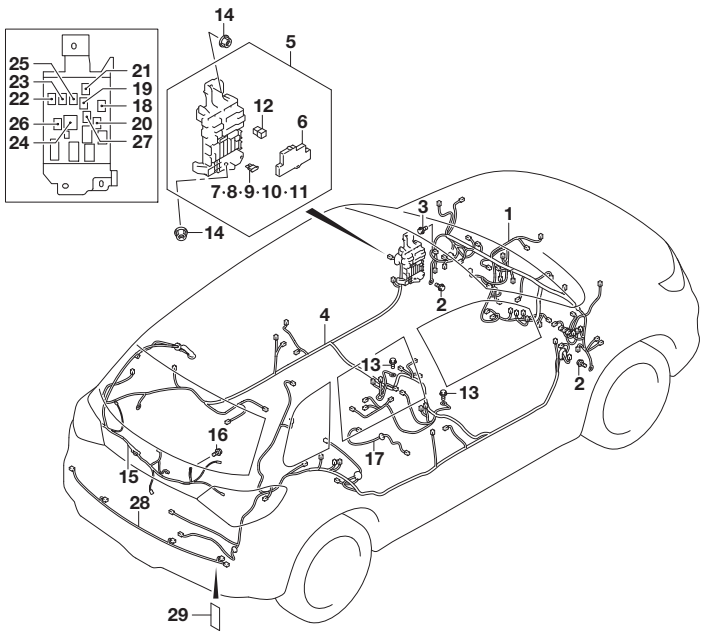

FIG.34PH (2-H-5) WIRING HARNESS REAR SIDE (TYPE 4:RHD)

REF NO.	PART NO.	DESCRIPTION	Q'TY	REMARKS
26	38860-76F01	RELAY ASSY	1	W/PUSH START IGN 1
27	38860-76F01	RELAY ASSY	1	REAR WIPER
28	36813-54P00	WIRE, RR PARK SNSR	1	GLX
29	36930-82010	COVER, HARNESS	2	

FIG.350A

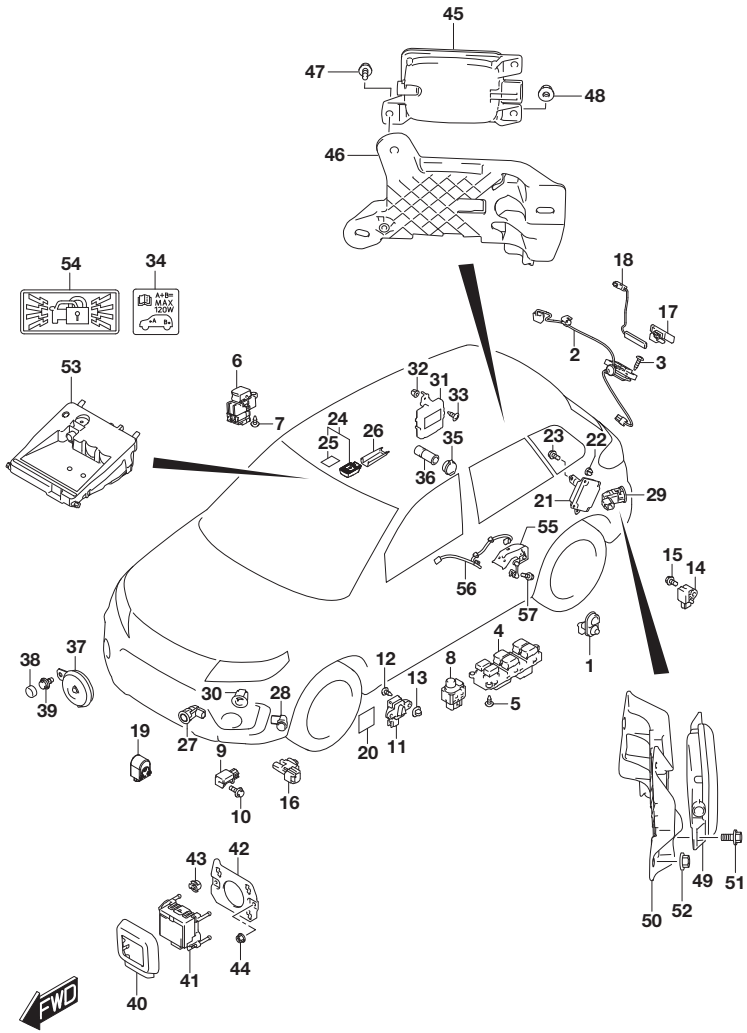

FIG.350A (2-H-6) ELECTRICAL CONTROL BODY (TYPE 3:LHD:K10C)

REF NO.	PART NO.	DESCRIPTION	Q'TY	REMARKS
1	37670-61M00	SET, DOOR SW	4	
2-1	37178-61M00	SWITCH ASSY, BK DR	1	N/PUSH START
2-2	37179-61M00	SWITCH ASSY, BK DR & KLS	1	W/PUSH START
3	03541-0416A	SCREW	2	
4-1	37990-54P01	SWITCH ASSY, POWER WINDOW MA	1	N/CRUISE CONTROL
4-2	37990-54P21	SWITCH ASSY, POWER WINDOW MA	1	W/CRUISE CONTROL
5	03541-0410A	SCREW	3	
6	37995-68L00	SWITCH ASSY, P/W SUB	3	
7	03541-0410A	SCREW	3	
8-1	37950-57L00	SWITCH ASSY, MIRROR	1	GL
8-2	37950-57L10	SWITCH ASSY, MIRROR	1	GLX
9	38930-61M00	SENSOR ASSY, FORWARD	2	
10	09115-06004	BOLT (6X16)	2	
11	38930-61M10	SENSOR ASSY, SIDE A/B	2	
12	09132-05058	SCREW (5X12)	4	
13	09148-05031	NUT	4	
14	38930-61M20	SENSOR ASSY, SIDE A/B	2	
15	09115-06004	BOLT (6X16)	2	
16	95643-51K00	SENSOR, OUTSIDE AIR TEMP	1	
17	37175-54P10	ANTENNA ASSY, KLS BACK DOOR	1	W/PUSH START
18	37175-54P20	ANTENNA ASSY, KLS LUGGAGE	1	W/PUSH START
19	38590-82K01	BUZZER ASSY, KLS	1	W/PUSH START
20	84761-50X50	SEAL (140X190)	1	N/PUSH START
21	38885-86R00	CONTROLLER ASSY, ACTIVE 4WD	1	4WD
22	09148-06007	NUT	2	4WD
23	03541-0612A	SCREW	2	4WD

FIG.350B(2-H-9) ELECTRICAL CONTROL BODY (TYPE 3:LHD:K14C)
FIG.350C(2-H-11) ELECTRICAL CONTROL BODY (TYPE 3:LHD:K14D)
FIG.350D(2-H-13) ELECTRICAL CONTROL BODY (TYPE 3:RHD:K10C)
FIG.350E(2-I-2) ELECTRICAL CONTROL BODY (TYPE 3:RHD:K14C)
FIG.350F(2-I-4) ELECTRICAL CONTROL BODY (TYPE 3:RHD:K14D)
FIG.350G(2-I-6) ELECTRICAL CONTROL BODY (TYPE 4:LHD)
FIG.350H(2-I-8) ELECTRICAL CONTROL BODY (TYPE 4:RHD)

FIG.350A

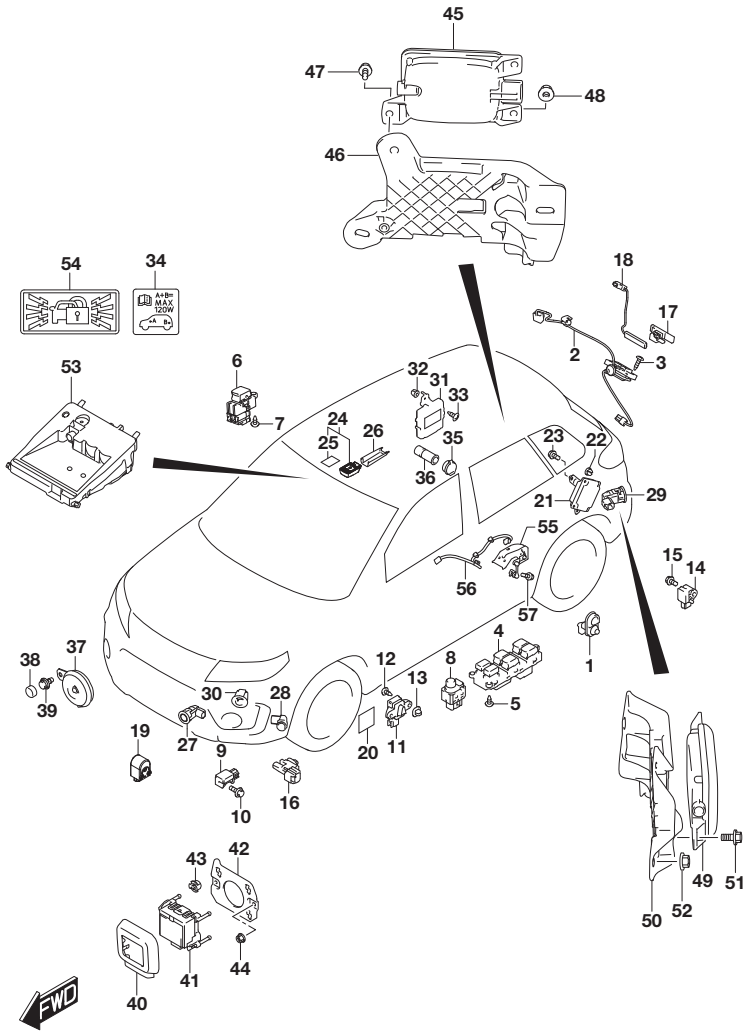

FIG.350A (2-H-7) ELECTRICAL CONTROL BODY (TYPE 3:LHD:K10C)

REF NO.	PART NO.	DESCRIPTION	Q'TY	REMARKS
24	37320-61M10	SENSOR ASSY, RAIN & LIGHT	1	GLX
25	37324-57L00	.SHEET	1	GLX
26	37325-54P00	COVER, RAIN & LIGHT SENSOR	1	GLX
27	37735-54P01	SENSOR ASSY, PARK	2	GLX
28	37735-54P11	SENSOR ASSY, PARK	2	GLX
29	37735-54P01	SENSOR ASSY, PARK	4	GLX
30	37737-54P00	BEZEL, PARK SNSR	2	GLX
31	37730-54P50	CONTROLLER ASSY, PARK SNSR	1	GLX
32	09148-05074	NUT	2	GLX
33	03541-0512A	SCREW	2	GLX
34	39442-61M00	LABEL, ACC SOCKET	1	W/CRUISE CONTROL
35	39411-86G00	CAP, ACC SOCKET	1	W/CRUISE CONTROL
36	39410-86G00	ACCESSORY SOCKET	1	W/CRUISE CONTROL
37	38500-63J01	HORN ASSY, LOW PITCHED	1	
38	38315-60B11	CAP	1	
39	09115-08004	BOLT (8X18)	1	
40	3F103-86R00	COVER, SENSOR ACC INNER	1	W/AEB MONAURAL CAMERA
41-1	33941-86R01	CONTROLLER ASSY, AUTO BRAKE	1	W/AEB MONAURAL CAMERA:5MT:2WD
41-2	33941-86R11	CONTROLLER ASSY, AUTO BRAKE	1	W/AEB MONAURAL CAMERA:5MT:4WD
41-3	33941-86R21	CONTROLLER ASSY, AUTO BRAKE	1	W/AEB MONAURAL CAMERA:6AT:2WD
41-4	33941-86R31	CONTROLLER ASSY, AUTO BRAKE	1	W/AEB MONAURAL CAMERA:6AT:4WD
42	33942-86R00	BRACKET, AUTO BRAKE CONT	1	W/AEB MONAURAL CAMERA
43	33949-73P00	CLIP, AUTO BRAKE CONT	3	W/AEB MONAURAL CAMERA
44	08316-1006A	NUT	2	W/AEB MONAURAL CAMERA
45	3F500-86R00	CONTROLLER ASSY, BLIND SPOT M	1	W/AEB MONAURAL CAMERA
46	3F501-86R00	BRACKET, BLIND SPOT M	1	W/AEB MONAURAL CAMERA
47	09116-05024	BOLT (5X11)	1	W/AEB MONAURAL CAMERA
48	09159-06076	NUT	3	W/AEB MONAURAL CAMERA
49	3F500-86R10	CONTROLLER ASSY, BLIND SPOT S	1	W/AEB MONAURAL CAMERA
50	3F501-86R10	BRACKET, BLIND SPOT S	1	W/AEB MONAURAL CAMERA
51	09116-05024	BOLT (5X11)	1	W/AEB MONAURAL CAMERA
52	09159-06076	NUT	3	W/AEB MONAURAL CAMERA
53-1	33990-86R01	CONTROLLER ASSY, CAMERA SYSTEM	1	W/AEB MONAURAL CAMERA:5MT
53-2	33990-86R11	CONTROLLER ASSY, CAMERA SYSTEM	1	W/AEB MONAURAL CAMERA:6AT
54	36771-79M01	LABEL, SECURITY ALARM	1	
55	38640-80J10	SENSOR ASSY, RR HEIGHT	1	W/LED HEADLAMP

FIG.350A

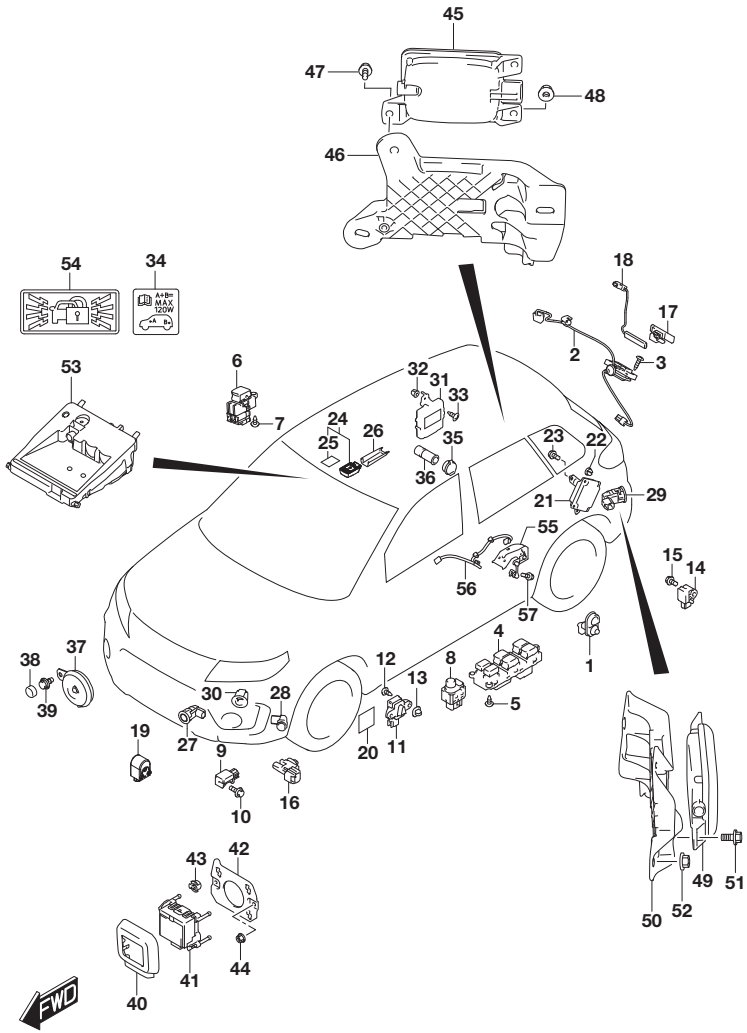

FIG.350A (2-H-8) ELECTRICAL CONTROL BODY (TYPE 3:LHD:K10C)

REF NO.	PART NO.	DESCRIPTION	Q'TY	REMARKS
56	36882-61M00	WIRE, RR HEIGHT SENSOR	1	W/LED HEADLAMP
57	02162-0612A	SCREW	3	W/LED HEADLAMP

FIG.350B

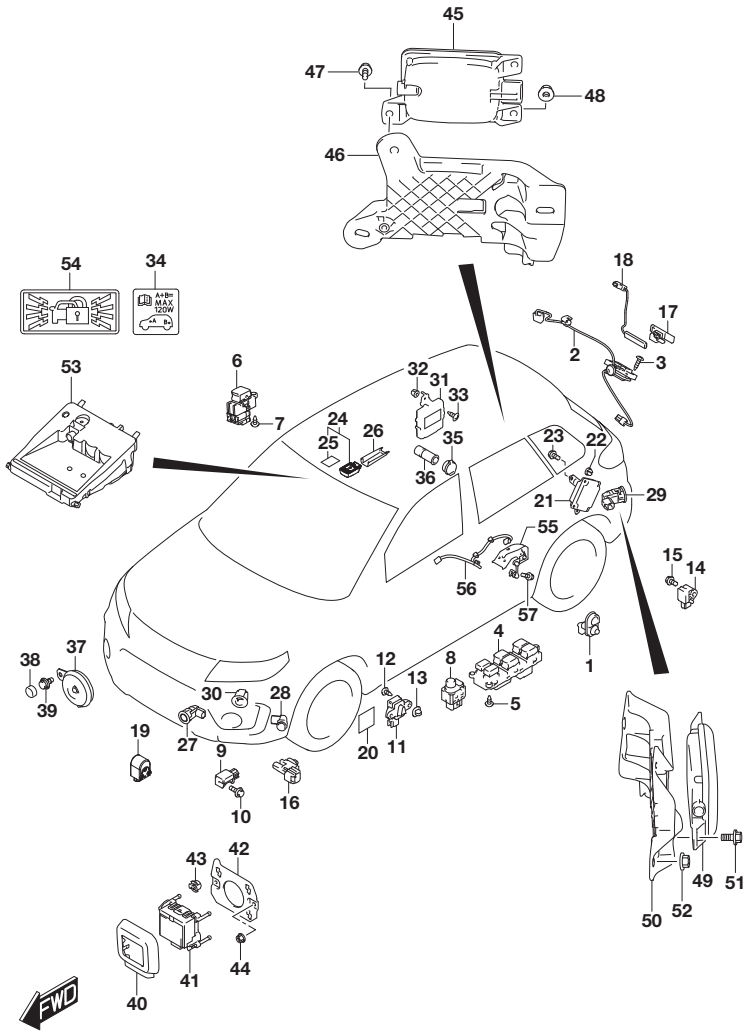

FIG.350B (2-H-9) ELECTRICAL CONTROL BODY (TYPE 3:LHD:K14C)

REF NO.	PART NO.	DESCRIPTION	Q'TY	REMARKS
1	37670-61M00	SET, DOOR SW	4	
2-1	37178-61M00	SWITCH ASSY, BK DR	1	N/PUSH START
2-2	37179-61M00	SWITCH ASSY, BK DR & KLS	1	W/PUSH START
3	03541-0416A	SCREW	2	
4	37990-54P21	SWITCH ASSY, POWER WINDOW MA	1	
5	03541-0410A	SCREW	3	
6	37995-68L00	SWITCH ASSY, P/W SUB	3	
7	03541-0410A	SCREW	3	
8-1	37950-57L00	SWITCH ASSY, MIRROR	1	GL
8-2	37950-57L10	SWITCH ASSY, MIRROR	1	GLX
9	38930-61M00	SENSOR ASSY, FORWARD	2	
10	09115-06004	BOLT (6X16)	2	
11	38930-61M10	SENSOR ASSY, SIDE A/B	2	
12	09132-05058	SCREW (5X12)	4	
13	09148-05031	NUT	4	
14	38930-61M20	SENSOR ASSY, SIDE A/B	2	
15	09115-06004	BOLT (6X16)	2	
16	95643-51K00	SENSOR, OUTSIDE AIR TEMP	1	
17	37175-54P10	ANTENNA ASSY, KLS BACK DOOR	1	W/PUSH START
18	37175-54P20	ANTENNA ASSY, KLS LUGGAGE	1	W/PUSH START
19	38590-82K01	BUZZER ASSY, KLS	1	W/PUSH START
20	84761-50X50	SEAL (140X190)	1	N/PUSH START
21	38885-86R10	CONTROLLER ASSY, ACTIVE 4WD	1	4WD
22	09148-06007	NUT	2	4WD
23	03541-0612A	SCREW	2	4WD
24	37320-61M10	SENSOR ASSY, RAIN & LIGHT	1	GLX
25	37324-57L00	.SHEET	1	GLX
26	37325-54P00	COVER, RAIN & LIGHT SENSOR	1	GLX
27	37735-54P01	SENSOR ASSY, PARK	2	GLX
28	37735-54P11	SENSOR ASSY, PARK	2	GLX
29	37735-54P01	SENSOR ASSY, PARK	4	GLX
30	37737-54P00	BEZEL, PARK SNSR	2	GLX
31	37730-54P50	CONTROLLER ASSY, PARK SNSR	1	GLX
32	09148-05074	NUT	2	GLX
33	03541-0512A	SCREW	2	GLX
34	39442-61M00	LABEL, ACC SOCKET	1	

FIG.350B

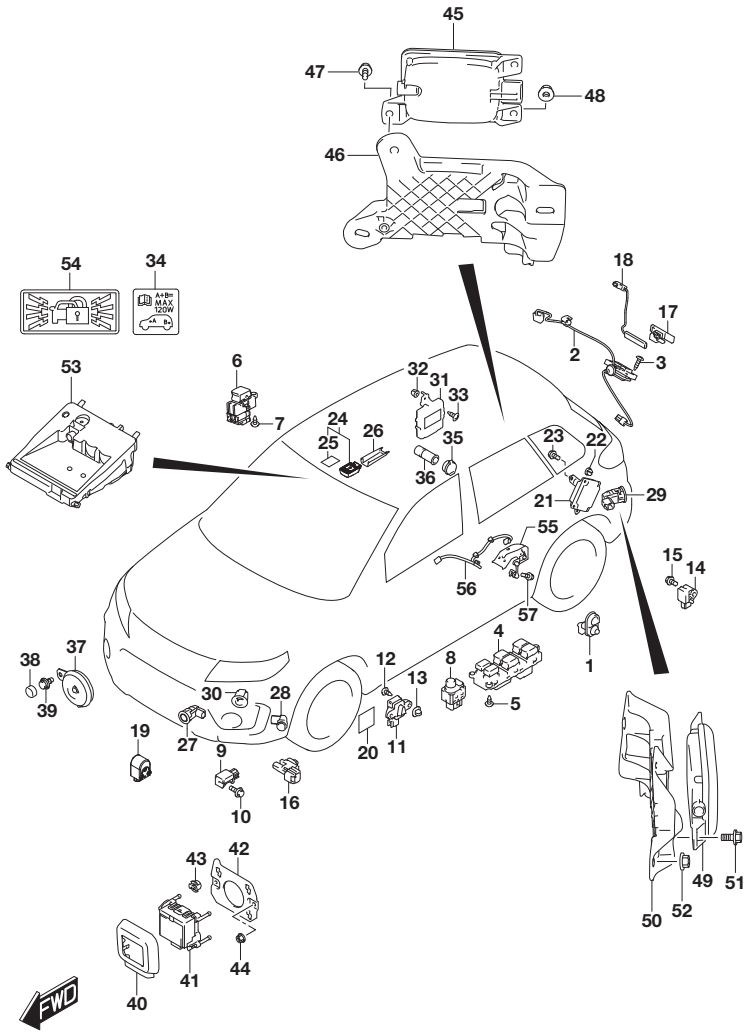

FIG.350B (2-H-10) ELECTRICAL CONTROL BODY (TYPE 3:LHD:K14C)

REF NO.	PART NO.	DESCRIPTION	Q'TY	REMARKS
35	39411-86G00	CAP, ACC SOCKET	1	
36	39410-86G00	ACCESSORY SOCKET	1	
37	38500-63J01	HORN ASSY, LOW PITCHED	1	
38	38315-60B11	CAP	1	
39	09115-08004	BOLT (8X18)	1	
40	3F103-86R00	COVER, SENSOR ACC INNER	1	W/AEB MONAURAL CAMERA
41-1	33941-86R41	CONTROLLER ASSY, AUTO BRAKE	1	W/AEB MONAURAL CAMERA:6MT:2WD
41-2	33941-86R51	CONTROLLER ASSY, AUTO BRAKE	1	W/AEB MONAURAL CAMERA:6MT:4WD
41-3	33941-86R61	CONTROLLER ASSY, AUTO BRAKE	1	W/AEB MONAURAL CAMERA:6AT:2WD
41-4	33941-86R71	CONTROLLER ASSY, AUTO BRAKE	1	W/AEB MONAURAL CAMERA:6AT:4WD
42	33942-86R00	BRACKET, AUTO BRAKE CONT	1	W/AEB MONAURAL CAMERA
43	33949-73P00	CLIP, AUTO BRAKE CONT	3	W/AEB MONAURAL CAMERA
44	08316-1006A	NUT	2	W/AEB MONAURAL CAMERA
45	3F500-86R00	CONTROLLER ASSY, BLIND SPOT M	1	W/AEB MONAURAL CAMERA
46	3F501-86R00	BRACKET, BLIND SPOT M	1	W/AEB MONAURAL CAMERA
47	09116-05024	BOLT (5X11)	1	W/AEB MONAURAL CAMERA
48	09159-06076	NUT	3	W/AEB MONAURAL CAMERA
49	3F500-86R10	CONTROLLER ASSY, BLIND SPOT S	1	W/AEB MONAURAL CAMERA
50	3F501-86R10	BRACKET, BLIND SPOT S	1	W/AEB MONAURAL CAMERA
51	09116-05024	BOLT (5X11)	1	W/AEB MONAURAL CAMERA
52	09159-06076	NUT	3	W/AEB MONAURAL CAMERA
53-1	33990-86R01	CONTROLLER ASSY, CAMERA SYSTEM	1	W/AEB MONAURAL CAMERA:6MT
53-2	33990-86R11	CONTROLLER ASSY, CAMERA SYSTEM	1	W/AEB MONAURAL CAMERA:6AT
54	36771-79M01	LABEL, SECURITY ALARM	1	
55	38640-80J10	SENSOR ASSY, RR HEIGHT	1	W/LED HEADLAMP
56	36882-61M00	WIRE, RR HEIGHT SENSOR	1	W/LED HEADLAMP
57	02162-0612A	SCREW	3	W/LED HEADLAMP

FIG.350C

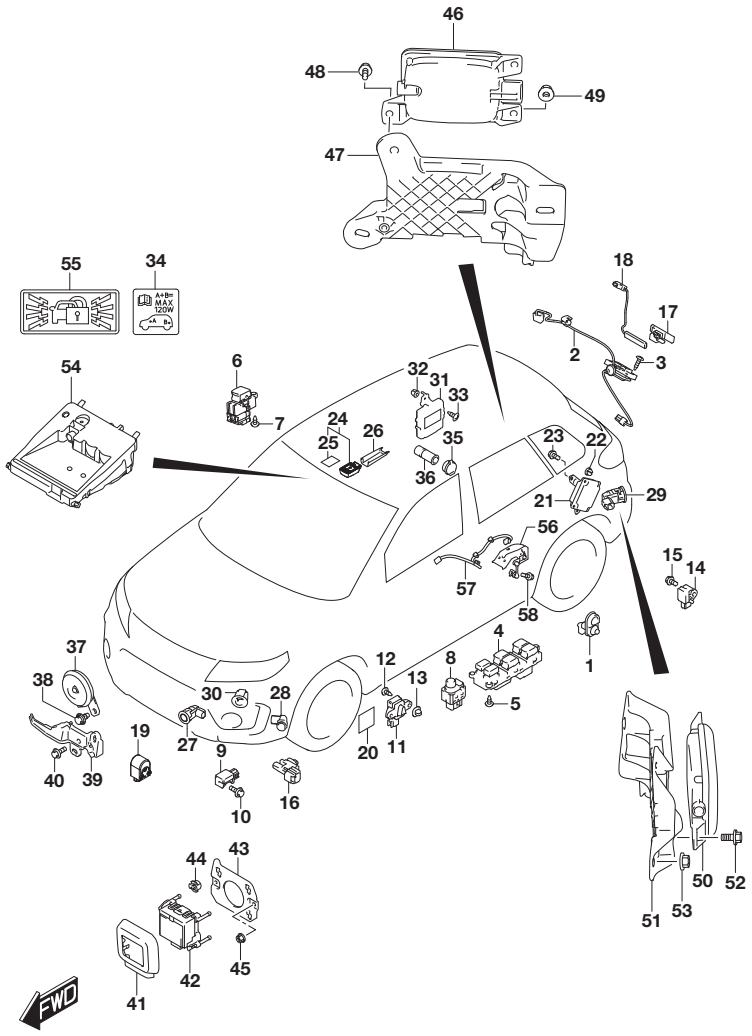

FIG.350C (2-H-11) ELECTRICAL CONTROL BODY (TYPE 3:LHD:K14D)

REF NO.	PART NO.	DESCRIPTION	Q'TY	REMARKS
1	37670-61M00	SET, DOOR SW	4	
2-1	37178-61M00	SWITCH ASSY, BK DR	1	N/PUSH START
2-2	37179-61M00	SWITCH ASSY, BK DR & KLS	1	W/PUSH START
3	03541-0416A	SCREW	2	
4-1	37990-54P02	SWITCH ASSY, POWER WINDOW MA	1	W/REAR MANUAL WINDOW
4-2	37990-54P22	SWITCH ASSY, POWER WINDOW MA	1	W/REAR POWER WINDOW
5	03541-0410A	SCREW	3	
6-1	37995-68L00	SWITCH ASSY, P/W SUB	1	W/REAR MANUAL WINDOW
6-2	37995-68L00	SWITCH ASSY, P/W SUB	3	W/REAR POWER WINDOW
7-1	03541-0410A	SCREW	1	W/REAR MANUAL WINDOW
7-2	03541-0410A	SCREW	3	W/REAR POWER WINDOW
8-1	37950-57L00	SWITCH ASSY, MIRROR	1	GL
8-2	37950-57L10	SWITCH ASSY, MIRROR	1	GLX
9	38930-61M00	SENSOR ASSY, FORWARD	2	
10	09115-06004	BOLT (6X16)	2	
11	38930-61M10	SENSOR ASSY, SIDE A/B	2	
12	09132-05058	SCREW (5X12)	4	
13	09148-05031	NUT	4	
14	38930-61M20	SENSOR ASSY, SIDE A/B	2	
15	09115-06004	BOLT (6X16)	2	
16	95643-51K00	SENSOR, OUTSIDE AIR TEMP	1	
17	37175-54P10	ANTENNA ASSY, KLS BACK DOOR	1	W/PUSH START
18	37175-54P20	ANTENNA ASSY, KLS LUGGAGE	1	W/PUSH START
19	38590-82K01	BUZZER ASSY, KLS	1	W/PUSH START
20	84761-50X50	SEAL (140X190)	1	N/PUSH START
21	38885-86R20	CONTROLLER ASSY, ACTIVE 4WD	1	4WD
22	09148-06007	NUT	2	4WD
23	03541-0612A	SCREW	2	4WD
24	37320-61M10	SENSOR ASSY, RAIN & LIGHT	1	
25	37324-57L00	.SHEET	1	
26	37325-54P00	COVER, RAIN & LIGHT SENSOR	1	
27	37735-54P01	SENSOR ASSY, PARK	2	GLX
28	37735-54P11	SENSOR ASSY, PARK	2	GLX
29	37735-54P01	SENSOR ASSY, PARK	4	GLX
30	37737-54P00	BEZEL, PARK SNSR	2	GLX
31	37730-54P50	CONTROLLER ASSY, PARK SNSR	1	GLX

FIG.350C

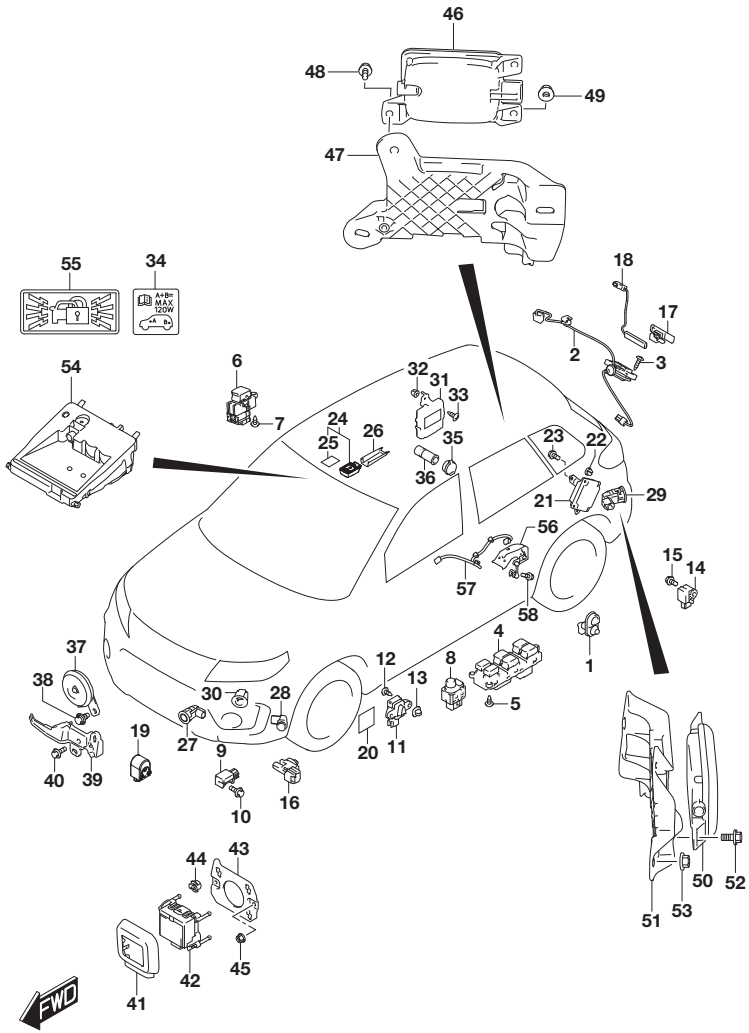

FIG.350C (2-H-12) ELECTRICAL CONTROL BODY (TYPE 3:LHD:K14D)

REF NO.	PART NO.	DESCRIPTION	Q'TY	REMARKS
32	09148-05074	NUT	2	GLX
33	03541-0512A	SCREW	2	GLX
34	39442-61M00	LABEL, ACC SOCKET	1	W/REAR ACC SOCKET
35	39411-86G00	CAP, ACC SOCKET	1	W/REAR ACC SOCKET
36	39410-86G00	ACCESSORY SOCKET	1	W/REAR ACC SOCKET
37	38500-74S00	HORN ASSY, LOW PITCHED	1	
38	09115-08004	BOLT (8X18)	1	
39	38560-74S00	COVER, HORN HARNESS	1	
40	09128-06090	SCREW (6X16)	1	
41	3F103-86R00	COVER, SENSOR ACC INNER	1	W/AEB MONAURAL CAMERA
42-1	33941-53S01	CONTROLLER ASSY, AUTO BRAKE	1	W/AEB MONAURAL CAMERA:2WD
42-2	33941-53S11	CONTROLLER ASSY, AUTO BRAKE	1	W/AEB MONAURAL CAMERA:4WD
43	33942-86R00	BRACKET, AUTO BRAKE CONT	1	W/AEB MONAURAL CAMERA
44	33949-73P00	CLIP, AUTO BRAKE CONT	3	W/AEB MONAURAL CAMERA
45	08316-1006A	NUT	2	W/AEB MONAURAL CAMERA
46	3F500-86R00	CONTROLLER ASSY, BLIND SPOT M	1	W/BLIND SPOT WARNING
47	3F501-86R00	BRACKET, BLIND SPOT M	1	W/BLIND SPOT WARNING
48	09116-05024	BOLT (5X11)	1	W/BLIND SPOT WARNING
49	09159-06076	NUT	3	W/BLIND SPOT WARNING
50	3F500-86R10	CONTROLLER ASSY, BLIND SPOT S	1	W/BLIND SPOT WARNING
51	3F501-86R10	BRACKET, BLIND SPOT S	1	W/BLIND SPOT WARNING
52	09116-05024	BOLT (5X11)	1	W/BLIND SPOT WARNING
53	09159-06076	NUT	3	W/BLIND SPOT WARNING
54	33990-86R01	CONTROLLER ASSY, CAMERA SYSTEM	1	W/AEB MONAURAL CAMERA
55	36771-79M01	LABEL, SECURITY ALARM	1	
56	38640-80J10	SENSOR ASSY, RR HEIGHT	1	
57	36882-61M00	WIRE, RR HEIGHT SENSOR	1	
58	02162-0612A	SCREW	3	

FIG.350D

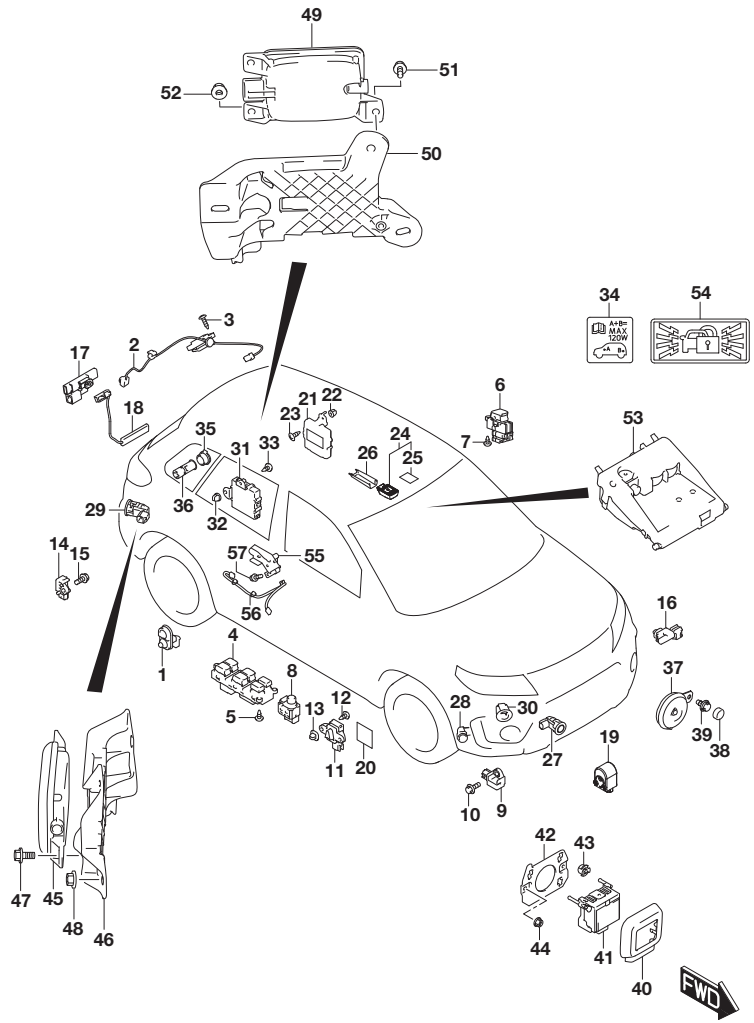

FIG.350D (2-H-13) ELECTRICAL CONTROL BODY (TYPE 3:RHD:K10C)

REF NO.	PART NO.	DESCRIPTION	Q'TY	REMARKS
1	37670-61M00	SET, DOOR SW	4	
2-1	37178-61M00	SWITCH ASSY, BK DR	1	N/PUSH START
2-2	37179-61M00	SWITCH ASSY, BK DR & KLS	1	W/PUSH START
3	03541-0416A	SCREW	2	
4-1	37990-54P11	SWITCH ASSY, POWER WINDOW MA	1	N/CRUISE CONTROL
4-2	37990-54P31	SWITCH ASSY, POWER WINDOW MA	1	W/CRUISE CONTROL
5	03541-0410A	SCREW	3	
6	37995-68L00	SWITCH ASSY, P/W SUB	3	
7	03541-0410A	SCREW	3	
8-1	37950-57L00	SWITCH ASSY, MIRROR	1	GL
8-2	37950-57L10	SWITCH ASSY, MIRROR	1	GLX
9	38930-61M00	SENSOR ASSY, FORWARD	2	
10	09115-06004	BOLT (6X16)	2	
11	38930-61M10	SENSOR ASSY, SIDE A/B	2	
12	09132-05058	SCREW (5X12)	4	
13	09148-05031	NUT	4	
14	38930-61M20	SENSOR ASSY, SIDE A/B	2	
15	09115-06004	BOLT (6X16)	2	
16	95643-51K00	SENSOR, OUTSIDE AIR TEMP	1	
17	37175-54P10	ANTENNA ASSY, KLS BACK DOOR	1	W/PUSH START
18	37175-54P20	ANTENNA ASSY, KLS LUGGAGE	1	W/PUSH START
19	38590-82K01	BUZZER ASSY, KLS	1	W/PUSH START
20	84761-50X50	SEAL (140X190)	1	N/PUSH START
21	38885-86R00	CONTROLLER ASSY, ACTIVE 4WD	1	4WD
22	09148-06007	NUT	2	4WD
23	03541-0612A	SCREW	2	4WD
24	37320-61M10	SENSOR ASSY, RAIN & LIGHT	1	GLX
25	37324-57L00	.SHEET	1	GLX
26	37325-54P00	COVER, RAIN & LIGHT SENSOR	1	GLX
27	37735-54P01	SENSOR ASSY, PARK	2	GLX
28	37735-54P11	SENSOR ASSY, PARK	2	GLX
29	37735-54P01	SENSOR ASSY, PARK	4	GLX
30	37737-54P00	BEZEL, PARK SNSR	2	GLX
31	37730-54P50	CONTROLLER ASSY, PARK SNSR	1	GLX
32	09148-05074	NUT	2	GLX
33	03541-0512A	SCREW	2	GLX

FIG.350D

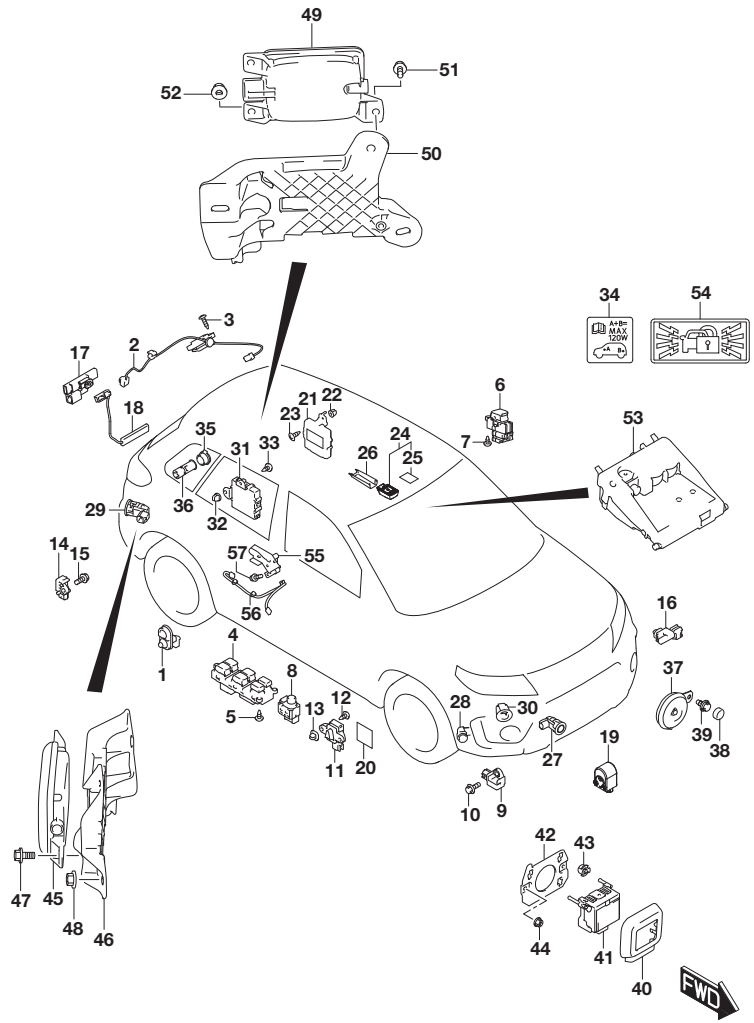

FIG.350D (2-H-14) ELECTRICAL CONTROL BODY (TYPE 3:RHD:K10C)

REF NO.	PART NO.	DESCRIPTION	Q'TY	REMARKS
34	39442-61M00	LABEL, ACC SOCKET	1	W/CRUISE CONTROL
35	39411-86G00	CAP, ACC SOCKET	1	W/CRUISE CONTROL
36	39410-86G00	ACCESSORY SOCKET	1	W/CRUISE CONTROL
37	38500-63J01	HORN ASSY, LOW PITCHED	1	
38	38315-60B11	CAP	1	
39	09115-08004	BOLT (8X18)	1	
40	3F103-86R00	COVER, SENSOR ACC INNER	1	W/AEB MONAURAL CAMERA
41-1	33941-86R01	CONTROLLER ASSY, AUTO BRAKE	1	W/AEB MONAURAL CAMERA:5MT:2WD
41-2	33941-86R11	CONTROLLER ASSY, AUTO BRAKE	1	W/AEB MONAURAL CAMERA:5MT:4WD
41-3	33941-86R21	CONTROLLER ASSY, AUTO BRAKE	1	W/AEB MONAURAL CAMERA:6AT:2WD
41-4	33941-86R31	CONTROLLER ASSY, AUTO BRAKE	1	W/AEB MONAURAL CAMERA:6AT:4WD
42	33942-86R00	BRACKET, AUTO BRAKE CONT	1	W/AEB MONAURAL CAMERA
43	33949-73P00	CLIP, AUTO BRAKE CONT	3	W/AEB MONAURAL CAMERA
44	08316-1006A	NUT	2	W/AEB MONAURAL CAMERA
45	3F500-86R00	CONTROLLER ASSY, BLIND SPOT M	1	W/AEB MONAURAL CAMERA
46	3F501-86R00	BRACKET, BLIND SPOT M	1	W/AEB MONAURAL CAMERA
47	09116-05024	BOLT (5X11)	1	W/AEB MONAURAL CAMERA
48	09159-06076	NUT	3	W/AEB MONAURAL CAMERA
49	3F500-86R10	CONTROLLER ASSY, BLIND SPOT S	1	W/AEB MONAURAL CAMERA
50	3F501-86R10	BRACKET, BLIND SPOT S	1	W/AEB MONAURAL CAMERA
51	09116-05024	BOLT (5X11)	1	W/AEB MONAURAL CAMERA
52	09159-06076	NUT	3	W/AEB MONAURAL CAMERA
53-1	33990-86R21	CONTROLLER ASSY, CAMERA SYSTEM	1	W/AEB MONAURAL CAMERA:5MT
53-2	33990-86R31	CONTROLLER ASSY, CAMERA SYSTEM	1	W/AEB MONAURAL CAMERA:6AT
54	36771-79M01	LABEL, SECURITY ALARM	1	
55	38640-80J10	SENSOR ASSY, RR HEIGHT	1	W/LED HEADLAMP
56	36882-61M00	WIRE, RR HEIGHT SENSOR	1	W/LED HEADLAMP
57	02162-0612A	SCREW	3	W/LED HEADLAMP

FIG.350E

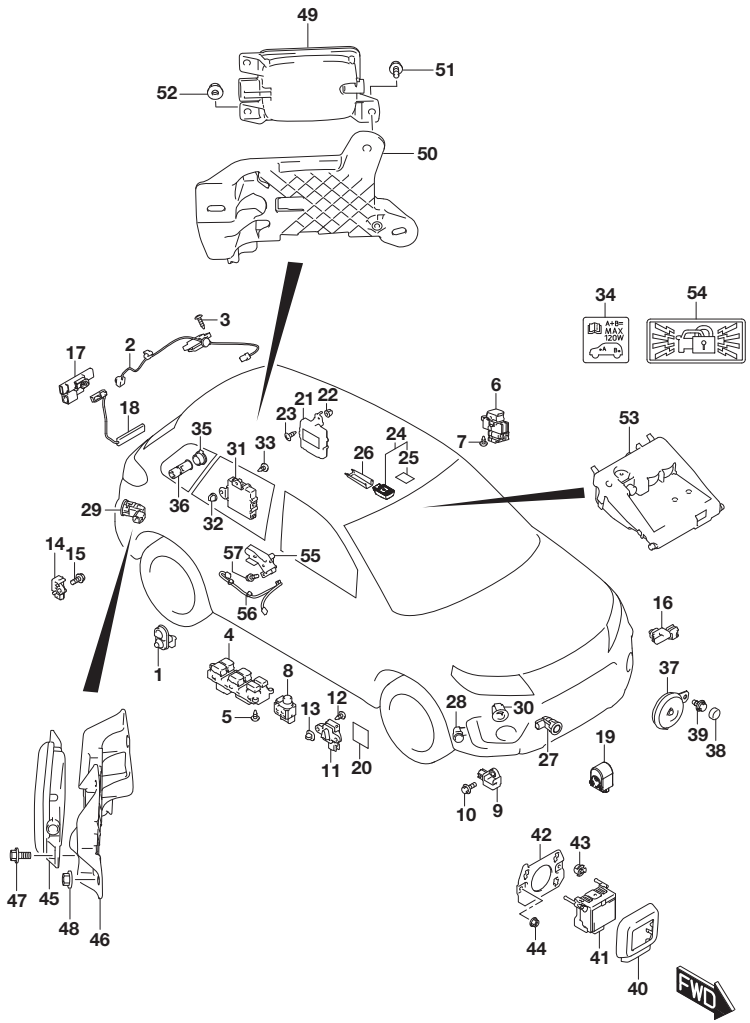

FIG.350E (2-I-2) ELECTRICAL CONTROL BODY (TYPE 3:RHD:K14C)

REF NO.	PART NO.	DESCRIPTION	Q'TY	REMARKS
1	37670-61M00	SET, DOOR SW	4	
2-1	37178-61M00	SWITCH ASSY, BK DR	1	N/PUSH START
2-2	37179-61M00	SWITCH ASSY, BK DR & KLS	1	W/PUSH START
3	03541-0416A	SCREW	2	
4	37990-54P31	SWITCH ASSY, POWER WINDOW MA	1	
5	03541-0410A	SCREW	3	
6	37995-68L00	SWITCH ASSY, P/W SUB	3	
7	03541-0410A	SCREW	3	
8-1	37950-57L00	SWITCH ASSY, MIRROR	1	GL
8-2	37950-57L10	SWITCH ASSY, MIRROR	1	GLX
9	38930-61M00	SENSOR ASSY, FORWARD	2	
10	09115-06004	BOLT (6X16)	2	
11	38930-61M10	SENSOR ASSY, SIDE A/B	2	
12	09132-05058	SCREW (5X12)	4	
13	09148-05031	NUT	4	
14	38930-61M20	SENSOR ASSY, SIDE A/B	2	
15	09115-06004	BOLT (6X16)	2	
16	95643-51K00	SENSOR, OUTSIDE AIR TEMP	1	
17	37175-54P10	ANTENNA ASSY, KLS BACK DOOR	1	W/PUSH START
18	37175-54P20	ANTENNA ASSY, KLS LUGGAGE	1	W/PUSH START
19	38590-82K01	BUZZER ASSY, KLS	1	W/PUSH START
20	84761-50X50	SEAL (140X190)	1	N/PUSH START
21	38885-86R10	CONTROLLER ASSY, ACTIVE 4WD	1	4WD
22	09148-06007	NUT	2	4WD
23	03541-0612A	SCREW	2	4WD
24	37320-61M10	SENSOR ASSY, RAIN & LIGHT	1	GLX
25	37324-57L00	.SHEET	1	GLX
26	37325-54P00	COVER, RAIN & LIGHT SENSOR	1	GLX
27	37735-54P01	SENSOR ASSY, PARK	2	GLX
28	37735-54P11	SENSOR ASSY, PARK	2	GLX
29	37735-54P01	SENSOR ASSY, PARK	4	GLX
30	37737-54P00	BEZEL, PARK SNSR	2	GLX
31	37730-54P50	CONTROLLER ASSY, PARK SNSR	1	GLX
32	09148-05074	NUT	2	GLX
33	03541-0512A	SCREW	2	GLX
34	39442-61M00	LABEL, ACC SOCKET	1	

FIG.350E

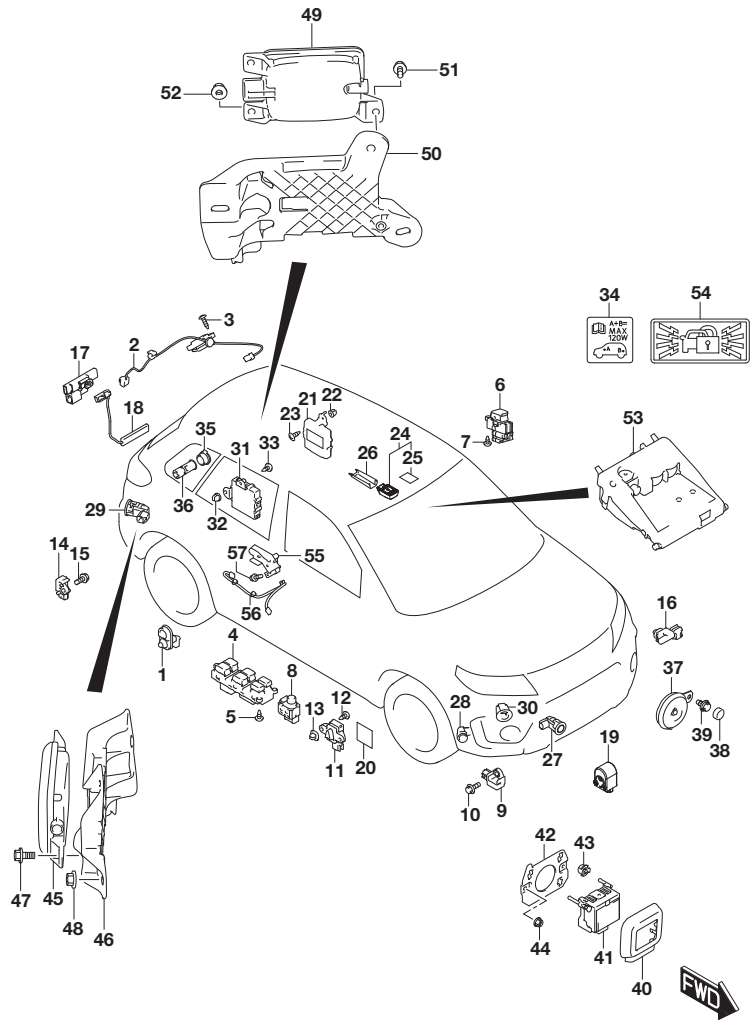

FIG.350E (2-I-3) ELECTRICAL CONTROL BODY (TYPE 3:RHD:K14C)

REF NO.	PART NO.	DESCRIPTION	Q'TY	REMARKS
35	39411-86G00	CAP, ACC SOCKET	1	
36	39410-86G00	ACCESSORY SOCKET	1	
37	38500-63J01	HORN ASSY, LOW PITCHED	1	
38	38315-60B11	CAP	1	
39	09115-08004	BOLT (8X18)	1	
40	3F103-86R00	COVER, SENSOR ACC INNER	1	W/AEB MONAURAL CAMERA
41-1	33941-86R41	CONTROLLER ASSY, AUTO BRAKE	1	W/AEB MONAURAL CAMERA:6MT:2WD
41-2	33941-86R51	CONTROLLER ASSY, AUTO BRAKE	1	W/AEB MONAURAL CAMERA:6MT:4WD
41-3	33941-86R61	CONTROLLER ASSY, AUTO BRAKE	1	W/AEB MONAURAL CAMERA:6AT:2WD
41-4	33941-86R71	CONTROLLER ASSY, AUTO BRAKE	1	W/AEB MONAURAL CAMERA:6AT:4WD
42	33942-86R00	BRACKET, AUTO BRAKE CONT	1	W/AEB MONAURAL CAMERA
43	33949-73P00	CLIP, AUTO BRAKE CONT	3	W/AEB MONAURAL CAMERA
44	08316-1006A	NUT	2	W/AEB MONAURAL CAMERA
45	3F500-86R00	CONTROLLER ASSY, BLIND SPOT M	1	W/AEB MONAURAL CAMERA
46	3F501-86R00	BRACKET, BLIND SPOT M	1	W/AEB MONAURAL CAMERA
47	09116-05024	BOLT (5X11)	1	W/AEB MONAURAL CAMERA
48	09159-06076	NUT	3	W/AEB MONAURAL CAMERA
49	3F500-86R10	CONTROLLER ASSY, BLIND SPOT S	1	W/AEB MONAURAL CAMERA
50	3F501-86R10	BRACKET, BLIND SPOT S	1	W/AEB MONAURAL CAMERA
51	09116-05024	BOLT (5X11)	1	W/AEB MONAURAL CAMERA
52	09159-06076	NUT	3	W/AEB MONAURAL CAMERA
53-1	33990-86R21	CONTROLLER ASSY, CAMERA SYSTEM	1	W/AEB MONAURAL CAMERA:6MT
53-2	33990-86R31	CONTROLLER ASSY, CAMERA SYSTEM	1	W/AEB MONAURAL CAMERA:6AT
54	36771-79M01	LABEL, SECURITY ALARM	1	
55	38640-80J10	SENSOR ASSY, RR HEIGHT	1	W/LED HEADLAMP
56	36882-61M00	WIRE, RR HEIGHT SENSOR	1	W/LED HEADLAMP
57	02162-0612A	SCREW	3	W/LED HEADLAMP

FIG.350F

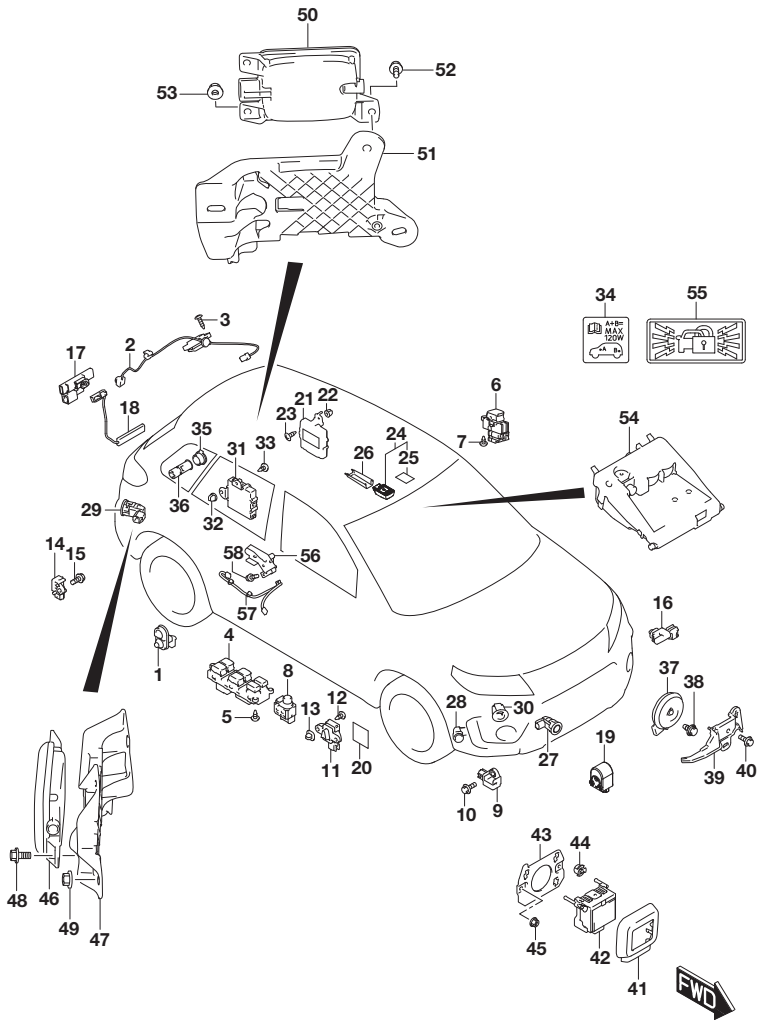

FIG.350F (2-I-4) ELECTRICAL CONTROL BODY (TYPE 3:RHD:K14D)

REF NO.	PART NO.	DESCRIPTION	Q'TY	REMARKS
1	37670-61M00	SET, DOOR SW	4	
2-1	37178-61M00	SWITCH ASSY, BK DR	1	N/PUSH START
2-2	37179-61M00	SWITCH ASSY, BK DR & KLS	1	W/PUSH START
3	03541-0416A	SCREW	2	
4-1	37990-54P12	SWITCH ASSY, POWER WINDOW MA	1	W/REAR MANUAL WINDOW
4-2	37990-54P32	SWITCH ASSY, POWER WINDOW MA	1	W/REAR POWER WINDOW
5	03541-0410A	SCREW	3	
6-1	37995-68L00	SWITCH ASSY, P/W SUB	1	W/REAR MANUAL WINDOW
6-2	37995-68L00	SWITCH ASSY, P/W SUB	3	W/REAR POWER WINDOW
7-1	03541-0410A	SCREW	1	W/REAR MANUAL WINDOW
7-2	03541-0410A	SCREW	3	W/REAR POWER WINDOW
8-1	37950-57L00	SWITCH ASSY, MIRROR	1	GL
8-2	37950-57L10	SWITCH ASSY, MIRROR	1	GLX
9	38930-61M00	SENSOR ASSY, FORWARD	2	
10	09115-06004	BOLT (6X16)	2	
11	38930-61M10	SENSOR ASSY, SIDE A/B	2	
12	09132-05058	SCREW (5X12)	4	
13	09148-05031	NUT	4	
14	38930-61M20	SENSOR ASSY, SIDE A/B	2	
15	09115-06004	BOLT (6X16)	2	
16	95643-51K00	SENSOR, OUTSIDE AIR TEMP	1	
17	37175-54P10	ANTENNA ASSY, KLS BACK DOOR	1	W/PUSH START
18	37175-54P20	ANTENNA ASSY, KLS LUGGAGE	1	W/PUSH START
19	38590-82K01	BUZZER ASSY, KLS	1	W/PUSH START
20	84761-50X50	SEAL (140X190)	1	N/PUSH START
21	38885-86R20	CONTROLLER ASSY, ACTIVE 4WD	1	4WD
22	09148-06007	NUT	2	4WD
23	03541-0612A	SCREW	2	4WD
24	37320-61M10	SENSOR ASSY, RAIN & LIGHT	1	
25	37324-57L00	.SHEET	1	
26	37325-54P00	COVER, RAIN & LIGHT SENSOR	1	
27	37735-54P01	SENSOR ASSY, PARK	2	GLX
28	37735-54P11	SENSOR ASSY, PARK	2	GLX
29	37735-54P01	SENSOR ASSY, PARK	4	GLX
30	37737-54P00	BEZEL, PARK SNSR	2	GLX
31	37730-54P50	CONTROLLER ASSY, PARK SNSR	1	GLX

FIG.350F

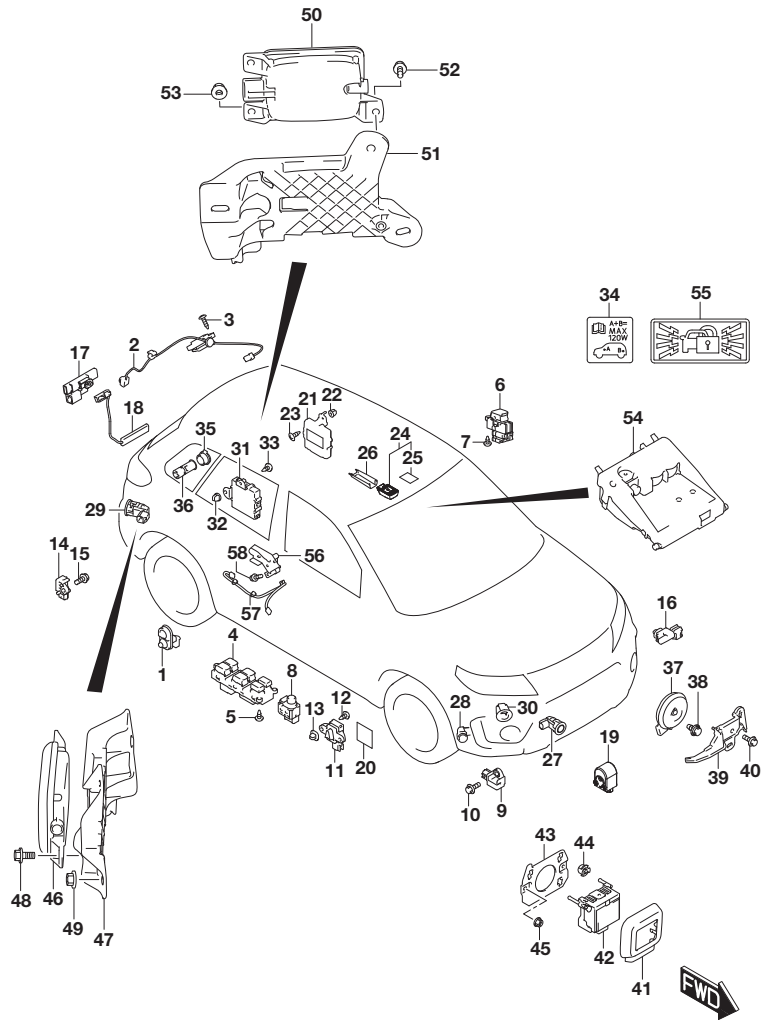

FIG.350F (2-I-5) ELECTRICAL CONTROL BODY (TYPE 3:RHD:K14D)

REF NO.	PART NO.	DESCRIPTION	Q'TY	REMARKS
32	09148-05074	NUT	2	GLX
33	03541-0512A	SCREW	2	GLX
34	39442-61M00	LABEL, ACC SOCKET	1	W/REAR ACC SOCKET
35	39411-86G00	CAP, ACC SOCKET	1	W/REAR ACC SOCKET
36	39410-86G00	ACCESSORY SOCKET	1	W/REAR ACC SOCKET
37	38500-74S00	HORN ASSY, LOW PITCHED	1	
38	09115-08004	BOLT (8X18)	1	
39	38560-74S00	COVER, HORN HARNESS	1	
40	09128-06090	SCREW (6X16)	1	
41	3F103-86R00	COVER, SENSOR ACC INNER	1	W/AEB MONAURAL CAMERA
42-1	33941-53S01	CONTROLLER ASSY, AUTO BRAKE	1	W/AEB MONAURAL CAMERA:2WD
42-2	33941-53S11	CONTROLLER ASSY, AUTO BRAKE	1	W/AEB MONAURAL CAMERA:4WD
43	33942-86R00	BRACKET, AUTO BRAKE CONT	1	W/AEB MONAURAL CAMERA
44	33949-73P00	CLIP, AUTO BRAKE CONT	3	W/AEB MONAURAL CAMERA
45	08316-1006A	NUT	2	W/AEB MONAURAL CAMERA
46	3F500-86R00	CONTROLLER ASSY, BLIND SPOT M	1	W/BLIND SPOT WARNING
47	3F501-86R00	BRACKET, BLIND SPOT M	1	W/BLIND SPOT WARNING
48	09116-05024	BOLT (5X11)	1	W/BLIND SPOT WARNING
49	09159-06076	NUT	3	W/BLIND SPOT WARNING
50	3F500-86R10	CONTROLLER ASSY, BLIND SPOT S	1	W/BLIND SPOT WARNING
51	3F501-86R10	BRACKET, BLIND SPOT S	1	W/BLIND SPOT WARNING
52	09116-05024	BOLT (5X11)	1	W/BLIND SPOT WARNING
53	09159-06076	NUT	3	W/BLIND SPOT WARNING
54	33990-86R21	CONTROLLER ASSY, CAMERA SYSTEM	1	W/AEB MONAURAL CAMERA
55	36771-79M01	LABEL, SECURITY ALARM	1	
56	38640-80J10	SENSOR ASSY, RR HEIGHT	1	
57	36882-61M00	WIRE, RR HEIGHT SENSOR	1	
58	02162-0612A	SCREW	3	

FIG.350G

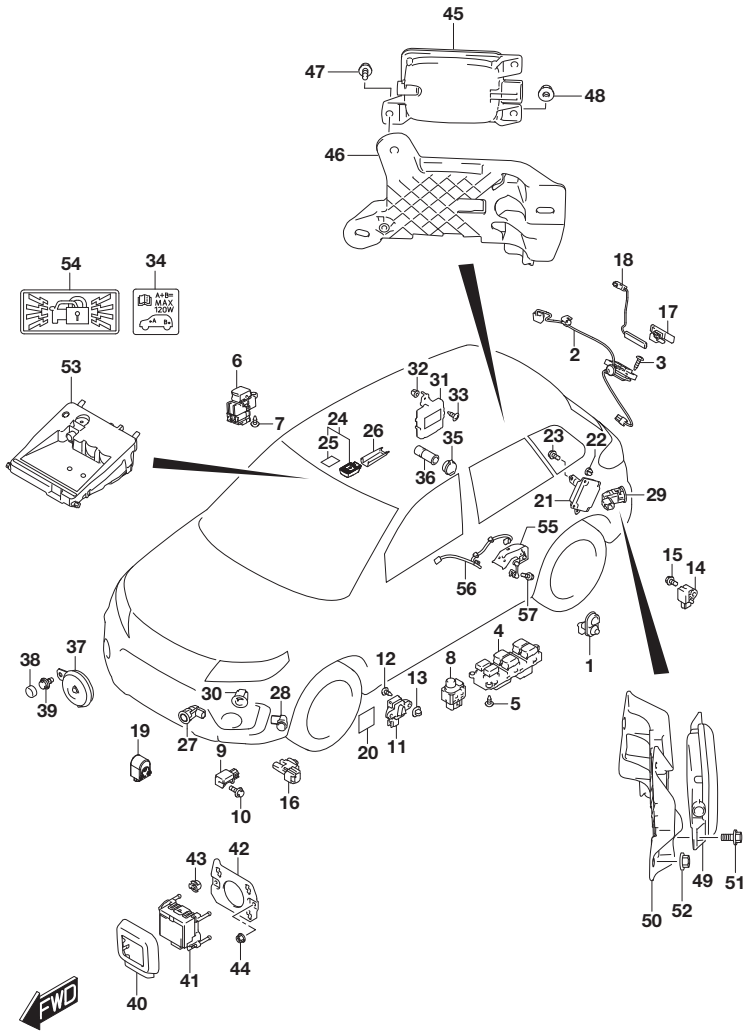

FIG.350G (2-I-6) ELECTRICAL CONTROL BODY (TYPE 4:LHD)

REF NO.	PART NO.	DESCRIPTION	Q'TY	REMARKS
1	37670-61M00	SET, DOOR SW	4	
2-1	37178-61M00	SWITCH ASSY, BK DR	1	N/PUSH START
2-2	37179-61M00	SWITCH ASSY, BK DR & KLS	1	W/PUSH START
3	03541-0416A	SCREW	2	
4	37990-54P21	SWITCH ASSY, POWER WINDOW MA	1	
5	03541-0410A	SCREW	3	
6	37995-68L00	SWITCH ASSY, P/W SUB	3	
7	03541-0410A	SCREW	3	
8-1	37950-57L00	SWITCH ASSY, MIRROR	1	GL
8-2	37950-57L10	SWITCH ASSY, MIRROR	1	GLX
9	38930-61M00	SENSOR ASSY, FORWARD	2	
10	09115-06004	BOLT (6X16)	2	
11	38930-61M10	SENSOR ASSY, SIDE A/B	2	
12	09132-05058	SCREW (5X12)	4	
13	09148-05031	NUT	4	
14	38930-61M20	SENSOR ASSY, SIDE A/B	2	
15	09115-06004	BOLT (6X16)	2	
16	95643-51K00	SENSOR, OUTSIDE AIR TEMP	1	
17	37175-54P10	ANTENNA ASSY, KLS BACK DOOR	1	W/PUSH START
18	37175-54P20	ANTENNA ASSY, KLS LUGGAGE	1	W/PUSH START
19	38590-82K01	BUZZER ASSY, KLS	1	W/PUSH START
20	84761-50X50	SEAL (140X190)	1	N/PUSH START
21	38885-86R10	CONTROLLER ASSY, ACTIVE 4WD	1	4WD
22	09148-06007	NUT	2	4WD
23	03541-0612A	SCREW	2	4WD
24	37320-61M10	SENSOR ASSY, RAIN & LIGHT	1	GLX
25	37324-57L00	.SHEET	1	GLX
26	37325-54P00	COVER, RAIN & LIGHT SENSOR	1	GLX
27	37735-54P01	SENSOR ASSY, PARK	2	GLX
28	37735-54P11	SENSOR ASSY, PARK	2	GLX
29	37735-54P01	SENSOR ASSY, PARK	4	GLX
30	37737-54P00	BEZEL, PARK SNSR	2	GLX
31	37730-54P50	CONTROLLER ASSY, PARK SNSR	1	GLX
32	09148-05074	NUT	2	GLX
33	03541-0512A	SCREW	2	GLX
34	39442-61M00	LABEL, ACC SOCKET	1	

FIG.350G

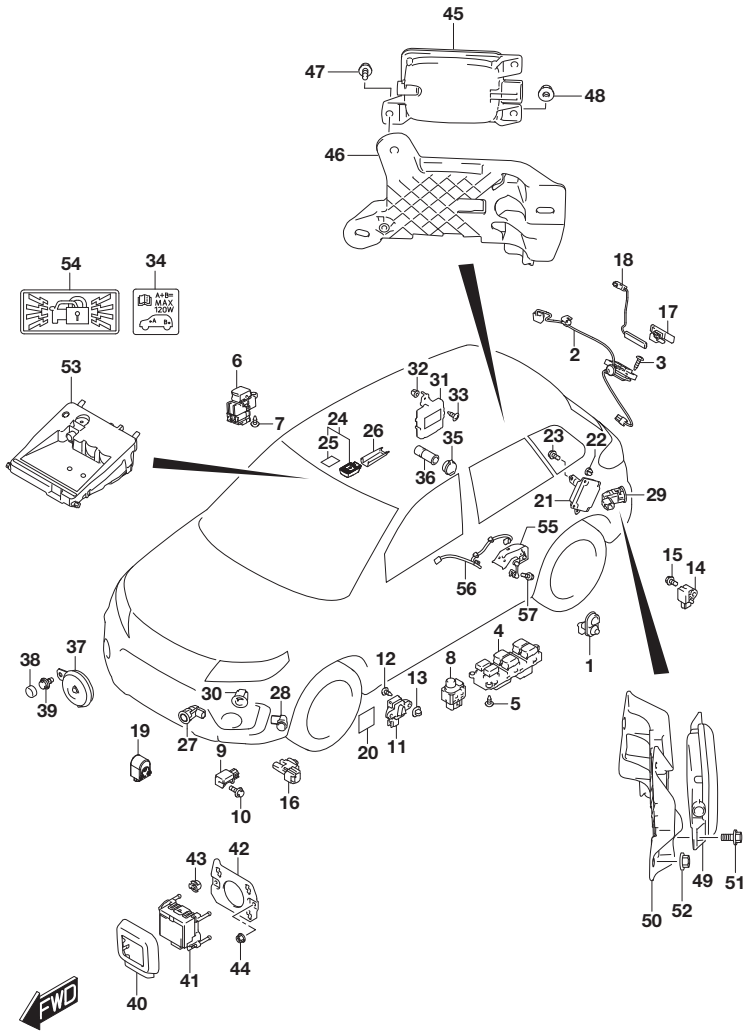

FIG.350G (2-I-7) ELECTRICAL CONTROL BODY (TYPE 4:LHD)

REF NO.	PART NO.	DESCRIPTION	Q'TY	REMARKS
35	39411-86G00	CAP, ACC SOCKET	1	
36	39410-86G00	ACCESSORY SOCKET	1	
37	38500-63J01	HORN ASSY, LOW PITCHED	1	
38	38315-60B11	CAP	1	
39	09115-08004	BOLT (8X18)	1	
40	3F103-86R00	COVER, SENSOR ACC INNER	1	W/AEB MONAURAL CAMERA
41-1	33941-86R41	CONTROLLER ASSY, AUTO BRAKE	1	W/AEB MONAURAL CAMERA:6MT:2WD
41-2	33941-86R51	CONTROLLER ASSY, AUTO BRAKE	1	W/AEB MONAURAL CAMERA:6MT:4WD
41-3	33941-86R61	CONTROLLER ASSY, AUTO BRAKE	1	W/AEB MONAURAL CAMERA:6AT:2WD
41-4	33941-86R71	CONTROLLER ASSY, AUTO BRAKE	1	W/AEB MONAURAL CAMERA:6AT:4WD
42	33942-86R00	BRACKET, AUTO BRAKE CONT	1	W/AEB MONAURAL CAMERA
43	33949-73P00	CLIP, AUTO BRAKE CONT	3	W/AEB MONAURAL CAMERA
44	08316-1006A	NUT	2	W/AEB MONAURAL CAMERA
45	3F500-86R00	CONTROLLER ASSY, BLIND SPOT M	1	W/AEB MONAURAL CAMERA
46	3F501-86R00	BRACKET, BLIND SPOT M	1	W/AEB MONAURAL CAMERA
47	09116-05024	BOLT (5X11)	1	W/AEB MONAURAL CAMERA
48	09159-06076	NUT	3	W/AEB MONAURAL CAMERA
49	3F500-86R10	CONTROLLER ASSY, BLIND SPOT S	1	W/AEB MONAURAL CAMERA
50	3F501-86R10	BRACKET, BLIND SPOT S	1	W/AEB MONAURAL CAMERA
51	09116-05024	BOLT (5X11)	1	W/AEB MONAURAL CAMERA
52	09159-06076	NUT	3	W/AEB MONAURAL CAMERA
53-1	33990-86R01	CONTROLLER ASSY, CAMERA SYSTEM	1	W/AEB MONAURAL CAMERA:6MT
53-2	33990-86R11	CONTROLLER ASSY, CAMERA SYSTEM	1	W/AEB MONAURAL CAMERA:6AT
54	36771-79M01	LABEL, SECURITY ALARM	1	
55	38640-80J10	SENSOR ASSY, RR HEIGHT	1	W/LED HEADLAMP
56	36882-61M00	WIRE, RR HEIGHT SENSOR	1	W/LED HEADLAMP
57	02162-0612A	SCREW	3	W/LED HEADLAMP

FIG.350H

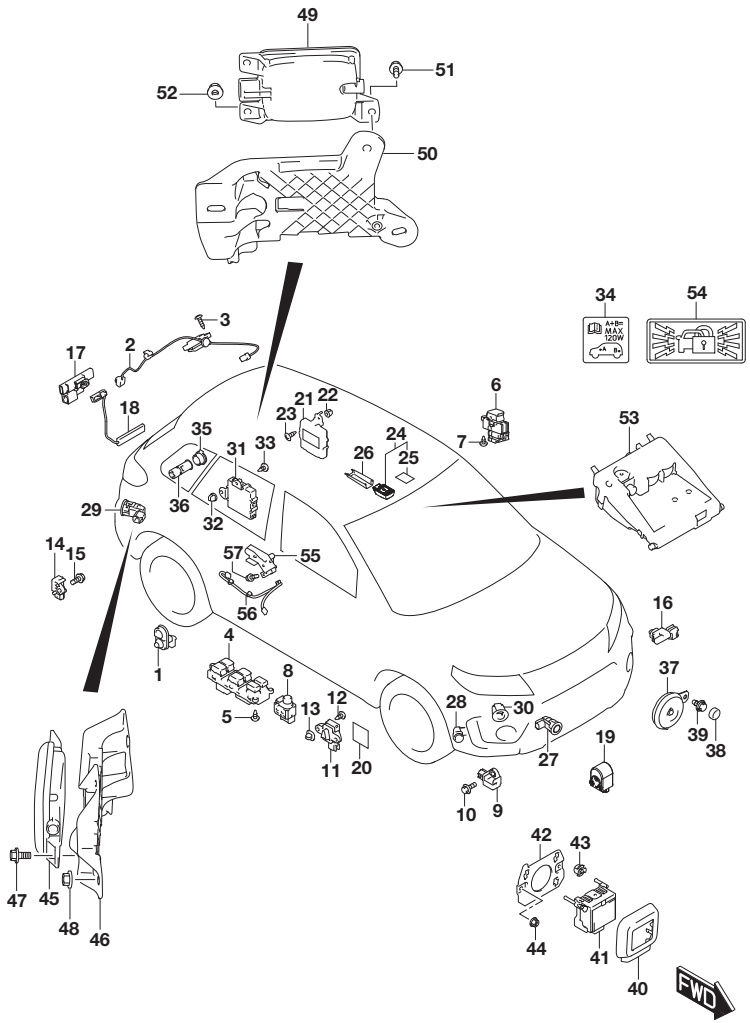

FIG.350H (2-I-8) ELECTRICAL CONTROL BODY (TYPE 4:RHD)

REF NO.	PART NO.	DESCRIPTION	Q'TY	REMARKS
1	37670-61M00	SET, DOOR SW	4	
2-1	37178-61M00	SWITCH ASSY, BK DR	1	N/PUSH START
2-2	37179-61M00	SWITCH ASSY, BK DR & KLS	1	W/PUSH START
3	03541-0416A	SCREW	2	
4	37990-54P31	SWITCH ASSY, POWER WINDOW MA	1	
5	03541-0410A	SCREW	3	
6	37995-68L00	SWITCH ASSY, P/W SUB	3	
7	03541-0410A	SCREW	3	
8-1	37950-57L00	SWITCH ASSY, MIRROR	1	GL
8-2	37950-57L10	SWITCH ASSY, MIRROR	1	GLX
9	38930-61M00	SENSOR ASSY, FORWARD	2	
10	09115-06004	BOLT (6X16)	2	
11	38930-61M10	SENSOR ASSY, SIDE A/B	2	
12	09132-05058	SCREW (5X12)	4	
13	09148-05031	NUT	4	
14	38930-61M20	SENSOR ASSY, SIDE A/B	2	
15	09115-06004	BOLT (6X16)	2	
16	95643-51K00	SENSOR, OUTSIDE AIR TEMP	1	
17	37175-54P10	ANTENNA ASSY, KLS BACK DOOR	1	W/PUSH START
18	37175-54P20	ANTENNA ASSY, KLS LUGGAGE	1	W/PUSH START
19	38590-82K01	BUZZER ASSY, KLS	1	W/PUSH START
20	84761-50X50	SEAL (140X190)	1	N/PUSH START
21	38885-86R10	CONTROLLER ASSY, ACTIVE 4WD	1	4WD
22	09148-06007	NUT	2	4WD
23	03541-0612A	SCREW	2	4WD
24	37320-61M10	SENSOR ASSY, RAIN & LIGHT	1	GLX
25	37324-57L00	.SHEET	1	GLX
26	37325-54P00	COVER, RAIN & LIGHT SENSOR	1	GLX
27	37735-54P01	SENSOR ASSY, PARK	2	GLX
28	37735-54P11	SENSOR ASSY, PARK	2	GLX
29	37735-54P01	SENSOR ASSY, PARK	4	GLX
30	37737-54P00	BEZEL, PARK SNSR	2	GLX
31	37730-54P50	CONTROLLER ASSY, PARK SNSR	1	GLX
32	09148-05074	NUT	2	GLX
33	03541-0512A	SCREW	2	GLX
34	39442-61M00	LABEL, ACC SOCKET	1	

FIG.350H

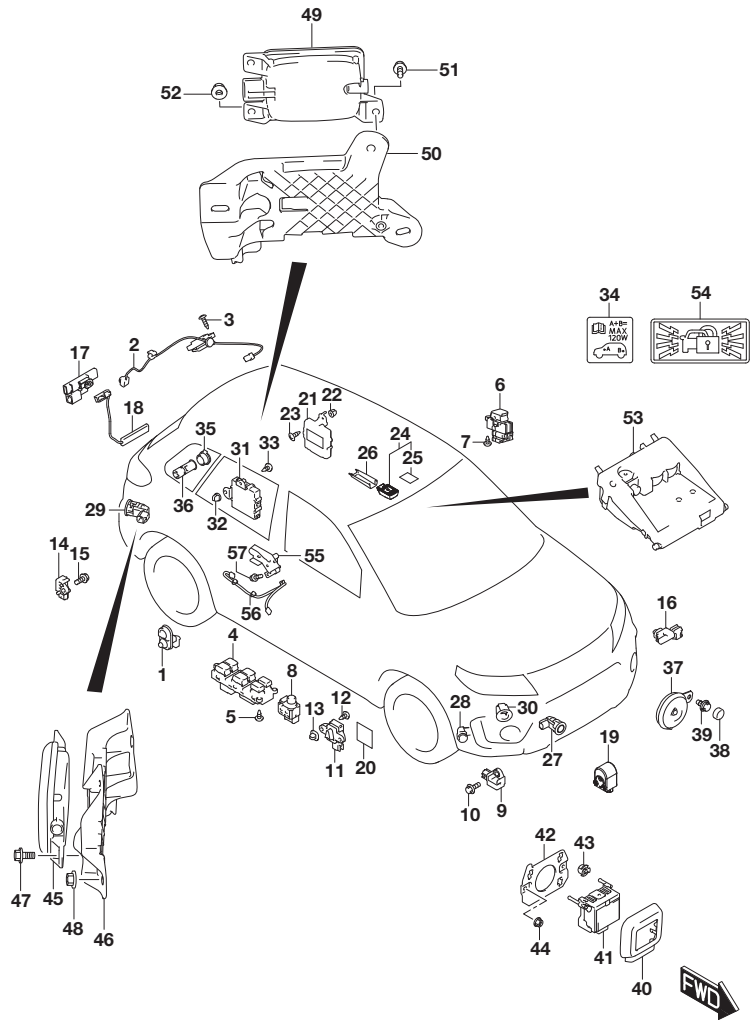

FIG.350H (2-I-9) ELECTRICAL CONTROL BODY (TYPE 4:RHD)

REF NO.	PART NO.	DESCRIPTION	Q'TY	REMARKS
35	39411-86G00	CAP, ACC SOCKET	1	
36	39410-86G00	ACCESSORY SOCKET	1	
37	38500-63J01	HORN ASSY, LOW PITCHED	1	
38	38315-60B11	CAP	1	
39	09115-08004	BOLT (8X18)	1	
40	3F103-86R00	COVER, SENSOR ACC INNER	1	W/AEB MONAURAL CAMERA
41-1	33941-86R41	CONTROLLER ASSY, AUTO BRAKE	1	W/AEB MONAURAL CAMERA:6MT:2WD
41-2	33941-86R51	CONTROLLER ASSY, AUTO BRAKE	1	W/AEB MONAURAL CAMERA:6MT:4WD
41-3	33941-86R61	CONTROLLER ASSY, AUTO BRAKE	1	W/AEB MONAURAL CAMERA:6AT:2WD
41-4	33941-86R71	CONTROLLER ASSY, AUTO BRAKE	1	W/AEB MONAURAL CAMERA:6AT:4WD
42	33942-86R00	BRACKET, AUTO BRAKE CONT	1	W/AEB MONAURAL CAMERA
43	33949-73P00	CLIP, AUTO BRAKE CONT	3	W/AEB MONAURAL CAMERA
44	08316-1006A	NUT	2	W/AEB MONAURAL CAMERA
45	3F500-86R00	CONTROLLER ASSY, BLIND SPOT M	1	W/AEB MONAURAL CAMERA
46	3F501-86R00	BRACKET, BLIND SPOT M	1	W/AEB MONAURAL CAMERA
47	09116-05024	BOLT (5X11)	1	W/AEB MONAURAL CAMERA
48	09159-06076	NUT	3	W/AEB MONAURAL CAMERA
49	3F500-86R10	CONTROLLER ASSY, BLIND SPOT S	1	W/AEB MONAURAL CAMERA
50	3F501-86R10	BRACKET, BLIND SPOT S	1	W/AEB MONAURAL CAMERA
51	09116-05024	BOLT (5X11)	1	W/AEB MONAURAL CAMERA
52	09159-06076	NUT	3	W/AEB MONAURAL CAMERA
53-1	33990-86R21	CONTROLLER ASSY, CAMERA SYSTEM	1	W/AEB MONAURAL CAMERA:6MT
53-2	33990-86R31	CONTROLLER ASSY, CAMERA SYSTEM	1	W/AEB MONAURAL CAMERA:6AT
54	36771-79M01	LABEL, SECURITY ALARM	1	
55	38640-80J10	SENSOR ASSY, RR HEIGHT	1	W/LED HEADLAMP
56	36882-61M00	WIRE, RR HEIGHT SENSOR	1	W/LED HEADLAMP
57	02162-0612A	SCREW	3	W/LED HEADLAMP

FIG.351A

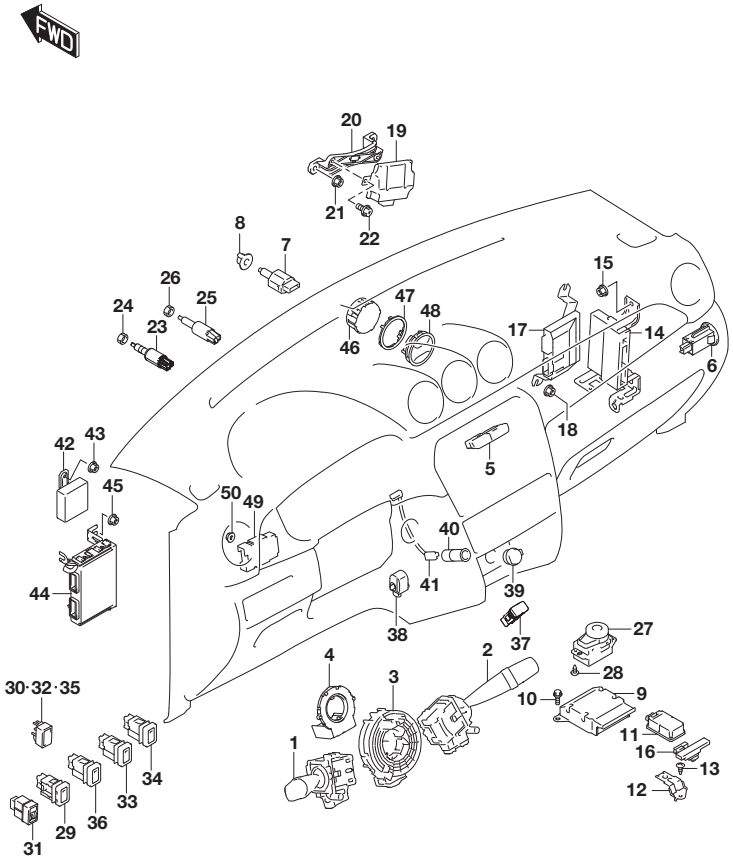

FIG.351A (2-I-10) ELECTRICAL CONTROL INSTRUMENTAL PANEL (SEE NOTE)

REF NO.	PART NO.	DESCRIPTION	Q'TY	REMARKS
1-1	37210-61M60	SWITCH ASSY, LIGHTING & TURN	1	GL
1-2	37210-61M50	SWITCH ASSY, LIGHTING & TURN	1	GLX
2-1	37310-68L10	SWITCH ASSY, WIPER & WASHER	1	GL
2-2	37310-68L20	SWITCH ASSY, WIPER & WASHER	1	GLX
3-1	37480-68L10	CABLE ASSY, CONTACT COIL	1	N/CRUISE CONTROL
3-2	37480-64J70	CABLE ASSY, CONTACT COIL	1	W/CRUISE CONTROL
4	37440-68L10	SENSOR ASSY, ANGLE	1	
5	37430-54P10-5PK	SWITCH ASSY, HAZARD WARNING (BLACK)	1	
6	38970-61M00	SWITCH ASSY, A/B ON OFF	1	
7-1	37740-62R00	SWITCH ASSY, STOP LAMP	1	GL:2WD
7-2	37740-62R10	SWITCH ASSY, STOP LAMP	1	GL:4WD
7-3	37740-62R10	SWITCH ASSY, STOP LAMP	1	GLX
8	37742-75H10	BUSH, STOP LAMP SW	1	
9	38910-86R00	CONTROLLER ASSY, A/B	1	
10	09115-06004	BOLT (6X16)	3	
11	37160-61M11	BASE ASSY, TPMS	1	
12	36772-61M00	BRACKET, TPMS CONT	1	
13	03141-0512A	SCREW	1	

NOTE : TYPE 3:LHD:K10C

FIG.351B(2-I-13) ELECTRICAL CONTROL INSTRUMENTAL PANEL (TYPE 3:LHD:K14C)
FIG.351C(2-J-2) ELECTRICAL CONTROL INSTRUMENTAL PANEL (TYPE 3:LHD:K14D)
FIG.351D(2-J-4) ELECTRICAL CONTROL INSTRUMENTAL PANEL (TYPE 3:RHD:K10C)
FIG.351E(2-J-7) ELECTRICAL CONTROL INSTRUMENTAL PANEL (TYPE 3:RHD:K14C)
FIG.351F(2-J-9) ELECTRICAL CONTROL INSTRUMENTAL PANEL (TYPE 3:RHD:K14D)
FIG.351G(2-J-11) ELECTRICAL CONTROL INSTRUMENTAL PANEL (TYPE 4:LHD)
FIG.351H(2-J-13) ELECTRICAL CONTROL INSTRUMENTAL PANEL (TYPE 4:RHD)

FIG.351A

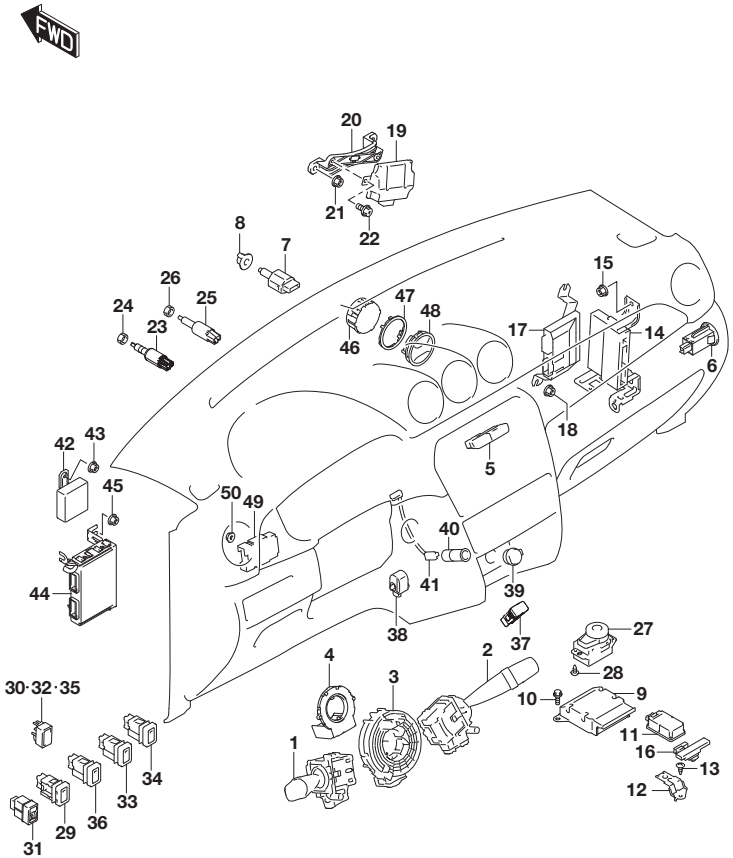

FIG.351A (2-I-11) ELECTRICAL CONTROL INSTRUMENTAL PANEL (SEE NOTE)

REF NO.	PART NO.	DESCRIPTION	Q'TY	REMARKS
14-1	37171-86R01	CONTROLLER ASSY, KEYLESS	1	N/PUSH START
14-2	37171-86RE0	CONTROLLER ASSY, KEYLESS	1	W/PUSH START
15	08316-1008A	NUT	2	
16	37175-54P00	ANTENNA ASSY, KLS INSIDE	1	W/PUSH START
17-1	33680-53S00	CONTROLLER ASSY, IDLE STOP	1	5MT
17-2	33680-53SB0	CONTROLLER ASSY, IDLE STOP	1	6AT
18	09159-06076	NUT	2	
19	33570-71M00	CONVERTER ASSY, DC/DC	1	6AT
20	33571-54P00	BRACKET, DC/DC CONVERTER	1	6AT
21	08316-1008A	NUT	2	6AT
22	02162-0610A	SCREW	2	6AT
23	37970-64J00	SWITCH ASSY, CLUTCH	1	5MT
24	09140-10043	NUT	1	5MT
25	37970-68J00	SWITCH ASSY, CLUTCH	1	5MT
26	09140-10043	NUT	1	5MT
27	37790-61M00	SWITCH ASSY, 4WD SELECT	1	4WD
28	03541-0412A	SCREW	3	4WD
29	37270-68L00	SWITCH ASSY, FR FOG	1	W/FRONT FOG LAMP
30	37285-62JA0	CAP, OPTION SW HOLE	1	N/FRONT FOG LAMP
31	35180-51KB0	SWITCH ASSY, HEADLAMP LEVELING	1	GL
32	37285-62JA0	CAP, OPTION SW HOLE	1	GLX
33-1	37780-61M00	SWITCH ASSY, ID STOP OFF	1	2WD
33-2	37780-54P90	SWITCH ASSY, ID STOP OFF & HILL	1	4WD
34	37690-53S00	SWITCH ASSY, AEB OFF & LDW	1	W/AEB MONAURAL CAMERA
35	37285-62JA0	CAP, OPTION SW HOLE	1	N/AEB CAMERA
36-1	37585-68L00	SWITCH ASSY, ESP OFF	1	GL
36-2	37585-61M90	SWITCH ASSY, ESP OFF & CL SNSR	1	GLX
37	37850-61M00	SWITCH ASSY, SEAT HEATER	2	W/SEAT HEATER
38	37734-54P00	BUZZER, PARK SNSR	2	GLX
39	39411-86G00	CAP, ACC SOCKET	1	
40	39410-86G00	ACCESSORY SOCKET	1	

NOTE : TYPE 3:LHD:K10C

FIG.351A

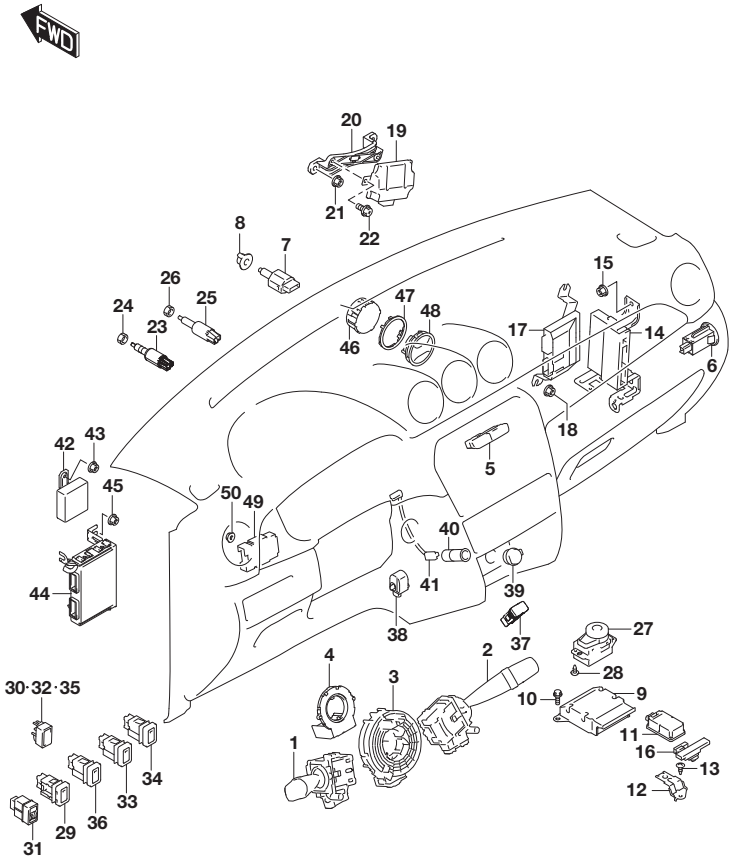

FIG.351A (2-I-12) ELECTRICAL CONTROL INSTRUMENTAL PANEL (SEE NOTE)

REF NO.	PART NO.	DESCRIPTION	Q'TY	REMARKS
41	39460-61M00	HARNESS ASSY, SOCKET	1	
42	38620-54P01	CONTROLLER ASSY, AUTO LEVELING	1	GLX
43	09159-06076	NUT	1	GLX
44-1	36770-86R00	CONTROLLER ASSY, BODY ELEC	1	W/BULB DRL
44-2	36770-86R10	CONTROLLER ASSY, BODY ELEC	1	W/LED DRL
45	09159-06076	NUT	3	
46	34600-53S00	CLOCK ASSY	1	GLX
47	34615-54P00-PEQ	BEZEL ASSY, CLOCK (BLACK)	1	GLX
48-1	34630-54P00-5PK	CAP, CLOCK HOLE (BLACK)	1	GL COLOR:BLACK
48-2	34630-54P00-AQS	CAP, CLOCK HOLE (BLACK)	1	GL COLOR:CHROME BLACK
49	33580-86R01	CONTROLLER ASSY, GATEWAY	1	
50	08316-1006A	NUT	1	

NOTE : TYPE 3:LHD:K10C

FIG.351B

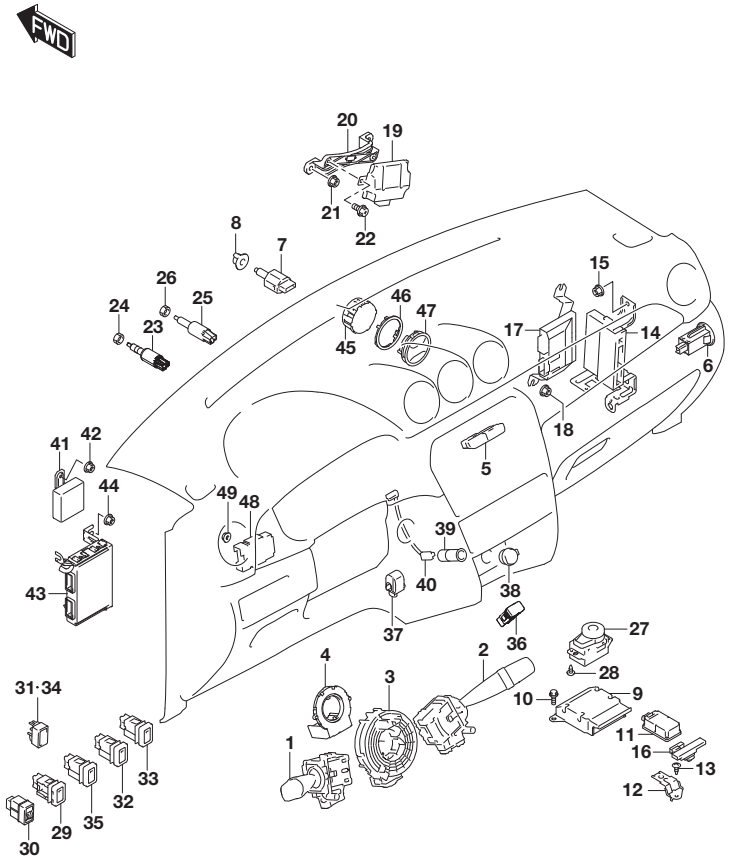

FIG.351B (2-I-13) ELECTRICAL CONTROL INSTRUMENTAL PANEL (SEE NOTE)

REF NO.	PART NO.	DESCRIPTION	Q'TY	REMARKS
1-1	37210-61M60	SWITCH ASSY, LIGHTING & TURN	1	GL
1-2	37210-61M50	SWITCH ASSY, LIGHTING & TURN	1	GLX
2-1	37310-68L10	SWITCH ASSY, WIPER & WASHER	1	GL
2-2	37310-68L20	SWITCH ASSY, WIPER & WASHER	1	GLX
3	37480-64J70	CABLE ASSY, CONTACT COIL	1	
4	37440-68L10	SENSOR ASSY, ANGLE	1	
5	37430-54P10-5PK	SWITCH ASSY, HAZARD WARNING (BLACK)	1	
6	38970-61M00	SWITCH ASSY, A/B ON OFF	1	
7-1	37740-62R00	SWITCH ASSY, STOP LAMP	1	GL:2WD
7-2	37740-62R10	SWITCH ASSY, STOP LAMP	1	GL:4WD
7-3	37740-62R10	SWITCH ASSY, STOP LAMP	1	GLX
8	37742-75H10	BUSH, STOP LAMP SW	1	
9	38910-86R00	CONTROLLER ASSY, A/B	1	
10	09115-06004	BOLT (6X16)	3	
11	37160-61M11	BASE ASSY, TPMS	1	
12	36772-61M00	BRACKET, TPMS CONT	1	
13	03141-0512A	SCREW	1	
14-1	37171-86R01	CONTROLLER ASSY, KEYLESS	1	N/PUSH START
14-2	37171-86RE0	CONTROLLER ASSY, KEYLESS	1	W/PUSH START
15	08316-1008A	NUT	2	
16	37175-54P00	ANTENNA ASSY, KLS INSIDE	1	W/PUSH START
17-1	33680-53S00	CONTROLLER ASSY, IDLE STOP	1	6MT
17-2	33680-53SB0	CONTROLLER ASSY, IDLE STOP	1	6AT
18	09159-06076	NUT	2	
19	33570-71M00	CONVERTER ASSY, DC/DC	1	6AT
20	33571-54P00	BRACKET, DC/DC CONVERTER	1	6AT
21	08316-1008A	NUT	2	6AT
22	02162-0610A	SCREW	2	6AT
23	37970-64J00	SWITCH ASSY, CLUTCH	1	6MT
24	09140-10043	NUT	1	6MT
25	37970-68J00	SWITCH ASSY, CLUTCH	1	6MT

NOTE : TYPE 3:LHD:K14C

FIG.351B

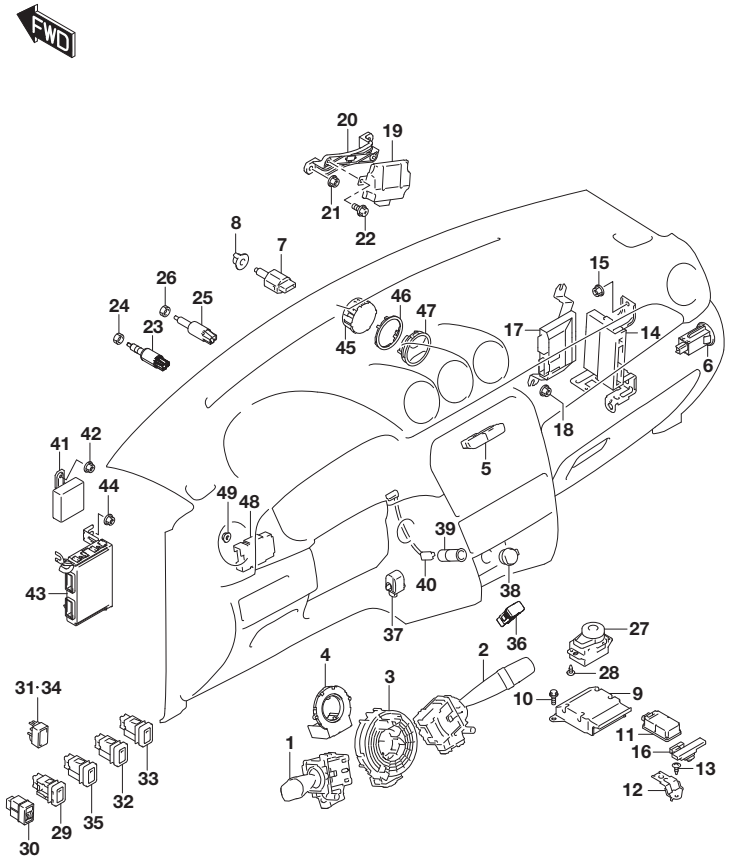

FIG.351B (2-I-14) ELECTRICAL CONTROL INSTRUMENTAL PANEL (SEE NOTE)

REF NO.	PART NO.	DESCRIPTION	Q'TY	REMARKS
26	09140-10043	NUT	1	6MT
27	37790-61M00	SWITCH ASSY, 4WD SELECT	1	4WD
28	03541-0412A	SCREW	3	4WD
29	37270-68L00	SWITCH ASSY, FR FOG	1	
30	35180-51KB0	SWITCH ASSY, HEADLAMP LEVELING	1	GL
31	37285-62JA0	CAP, OPTION SW HOLE	1	GLX
32-1	37780-61M00	SWITCH ASSY, ID STOP OFF	1	2WD
32-2	37780-54P90	SWITCH ASSY, ID STOP OFF & HILL	1	4WD
33	37690-53S00	SWITCH ASSY, AEB OFF & LDW	1	W/AEB MONAURAL CAMERA
34	37285-62JA0	CAP, OPTION SW HOLE	1	N/AEB CAMERA
35-1	37585-68L00	SWITCH ASSY, ESP OFF	1	GL
35-2	37585-61M90	SWITCH ASSY, ESP OFF & CL SNSR	1	GLX
36	37850-61M00	SWITCH ASSY, SEAT HEATER	2	W/SEAT HEATER
37	37734-54P00	BUZZER, PARK SNSR	2	GLX
38	39411-86G00	CAP, ACC SOCKET	1	
39	39410-86G00	ACCESSORY SOCKET	1	
40	39460-61M00	HARNESS ASSY, SOCKET	1	
41	38620-54P01	CONTROLLER ASSY, AUTO LEVELING	1	GLX
42	09159-06076	NUT	1	GLX
43	36770-86R10	CONTROLLER ASSY, BODY ELEC	1	
44	09159-06076	NUT	3	
45	34600-53S00	CLOCK ASSY	1	GLX
46	34615-54P00-PEQ	BEZEL ASSY, CLOCK (BLACK)	1	GLX
47	34630-54P00-AQS	CAP, CLOCK HOLE (BLACK)	1	GL
48	33580-86R01	CONTROLLER ASSY, GATEWAY	1	
49	08316-1006A	NUT	1	

NOTE : TYPE 3:LHD:K14C

FIG.351C

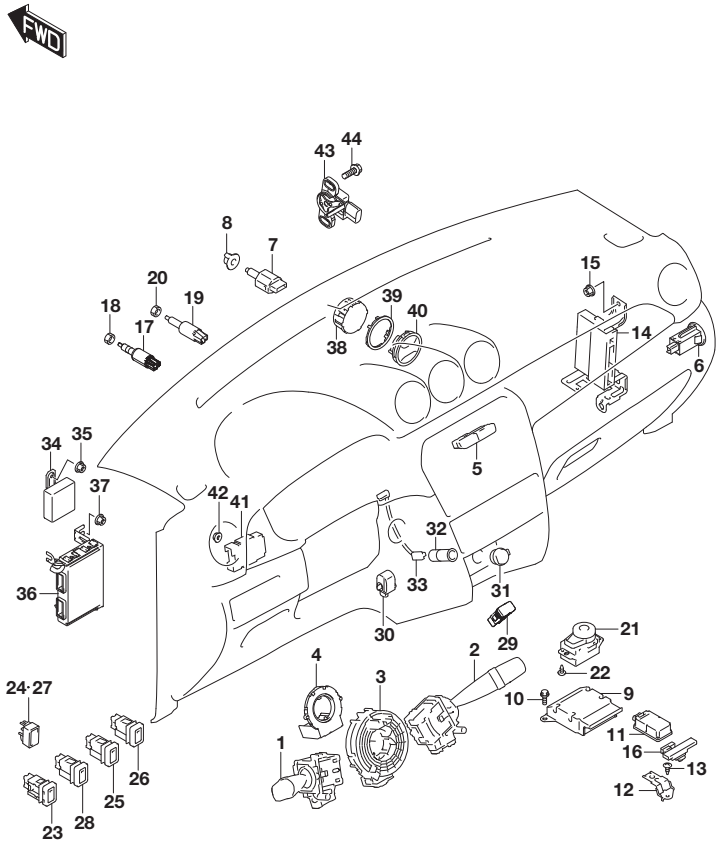

FIG.351C (2-J-2) ELECTRICAL CONTROL INSTRUMENTAL PANEL (SEE NOTE)

REF NO.	PART NO.	DESCRIPTION	Q'TY	REMARKS
1	37210-61M50	SWITCH ASSY, LIGHTING & TURN	1	
2	37310-68L20	SWITCH ASSY, WIPER & WASHER	1	
3	37480-64J70	CABLE ASSY, CONTACT COIL	1	
4	37440-68L10	SENSOR ASSY, ANGLE	1	
5	37430-54P10-5PK	SWITCH ASSY, HAZARD WARNING (BLACK)	1	
6	38970-61M00	SWITCH ASSY, A/B ON OFF	1	
7-1	37740-62R00	SWITCH ASSY, STOP LAMP	1	N/AEB CAMERA
7-2	37740-62R10	SWITCH ASSY, STOP LAMP	1	W/AEB MONAURAL CAMERA
8	37742-75H10	BUSH, STOP LAMP SW	1	
9	38910-86R00	CONTROLLER ASSY, A/B	1	
10	09115-06004	BOLT (6X16)	3	
11	37160-61M11	BASE ASSY, TPMS	1	
12	36772-61M00	BRACKET, TPMS CONT	1	
13	03141-0512A	SCREW	1	
14-1	37171-86R01	CONTROLLER ASSY, KEYLESS	1	N/PUSH START
14-2	37171-86RE0	CONTROLLER ASSY, KEYLESS	1	W/PUSH START
15	08316-1008A	NUT	2	
16	37175-54P00	ANTENNA ASSY, KLS INSIDE	1	W/PUSH START
17	37970-64J00	SWITCH ASSY, CLUTCH	1	
18	09140-10043	NUT	1	
19	37970-68J00	SWITCH ASSY, CLUTCH	1	
20	09140-10043	NUT	1	
21	37790-61M00	SWITCH ASSY, 4WD SELECT	1	4WD
22	03541-0412A	SCREW	3	4WD
23	37270-68L00	SWITCH ASSY, FR FOG	1	
24	37285-62JA0	CAP, OPTION SW HOLE	1	
25-1	37780-61M00	SWITCH ASSY, ID STOP OFF	1	2WD
25-2	37780-54P90	SWITCH ASSY, ID STOP OFF & HILL	1	4WD
26	37690-53S00	SWITCH ASSY, AEB OFF & LDW	1	W/AEB MONAURAL CAMERA
27	37285-62JA0	CAP, OPTION SW HOLE	1	N/AEB CAMERA

NOTE : TYPE 3:LHD:K14D

FIG.351C

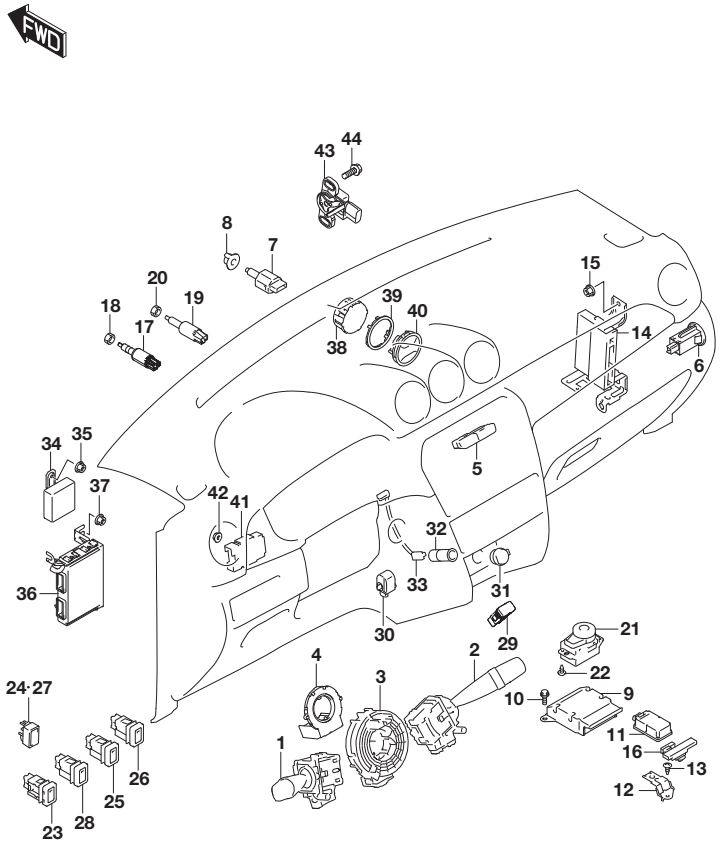

FIG.351C (2-J-3) ELECTRICAL CONTROL INSTRUMENTAL PANEL (SEE NOTE)

REF NO.	PART NO.	DESCRIPTION	Q'TY	REMARKS
28-1	37585-68L00	SWITCH ASSY, ESP OFF	1	GL
28-2	37585-61M90	SWITCH ASSY, ESP OFF & CL SNSR	1	GLX
29	37850-61M00	SWITCH ASSY, SEAT HEATER	2	W/SEAT HEATER
30	37734-54P00	BUZZER, PARK SNSR	2	GLX
31	39411-86G00	CAP, ACC SOCKET	1	
32	39410-86G00	ACCESSORY SOCKET	1	
33	39460-61M00	HARNESS ASSY, SOCKET	1	
34	38620-54P10	CONTROLLER ASSY, AUTO LEVELING	1	
35	09159-06076	NUT	1	
36-1	36770-86R00	CONTROLLER ASSY, BODY ELEC	1	N/FOOT ILLUMINATION
36-2	36770-86R10	CONTROLLER ASSY, BODY ELEC	1	W/FOOT ILLUMINATION
37	09159-06076	NUT	3	
38	34600-53S00	CLOCK ASSY	1	GLX
39	34615-54P00-PEQ	BEZEL ASSY, CLOCK (BLACK)	1	GLX
40-1	34630-54P00-5PK	CAP, CLOCK HOLE (BLACK)	1	GL COLOR:BLACK
40-2	34630-54P00-AQS	CAP, CLOCK HOLE (BLACK)	1	GL COLOR:CHROME BLACK
41	33580-57T00	CONTROLLER ASSY, GATEWAY	1	
42	08316-1006A	NUT	1	
43	91480-74S00	SENSOR ASSY, BRAKE STROKE	1	
44	01550-0616A	BOLT	2	

NOTE : TYPE 3:LHD:K14D

FIG.351D

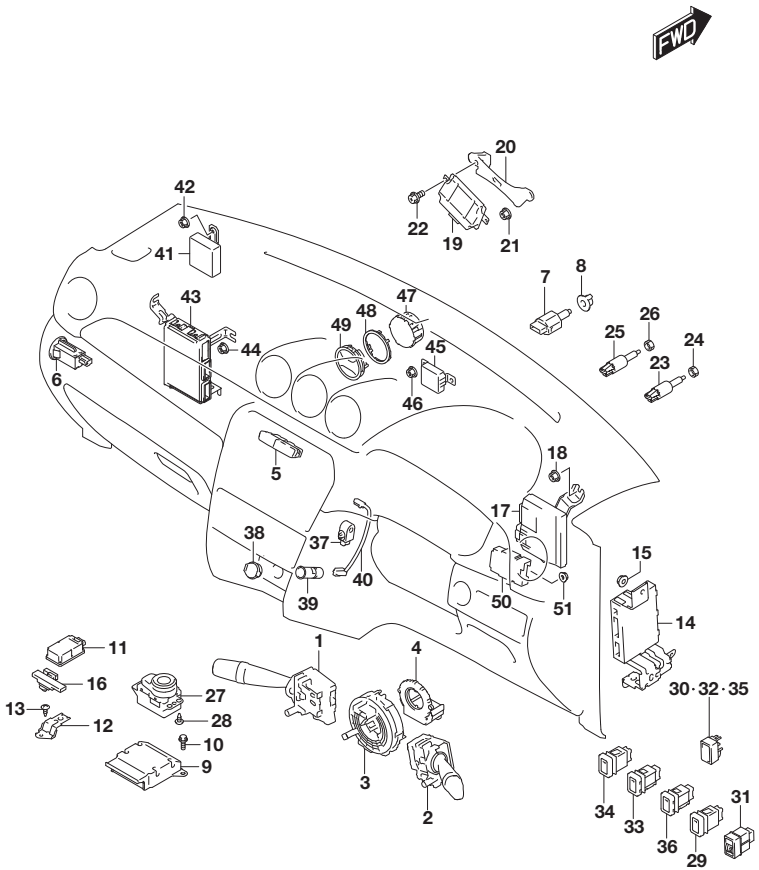

FIG.351D (2-J-4) ELECTRICAL CONTROL INSTRUMENTAL PANEL (SEE NOTE)

REF NO.	PART NO.	DESCRIPTION	Q'TY	REMARKS
1-1	37210-61M60	SWITCH ASSY, LIGHTING & TURN	1	GL
1-2	37210-61M50	SWITCH ASSY, LIGHTING & TURN	1	GLX
2-1	37310-68L10	SWITCH ASSY, WIPER & WASHER	1	GL
2-2	37310-68L20	SWITCH ASSY, WIPER & WASHER	1	GLX
3-1	37480-68L10	CABLE ASSY, CONTACT COIL	1	N/CRUISE CONTROL
3-2	37480-64J70	CABLE ASSY, CONTACT COIL	1	W/CRUISE CONTROL
4	37440-68L10	SENSOR ASSY, ANGLE	1	
5	37430-54P10-5PK	SWITCH ASSY, HAZARD WARNING (BLACK)	1	
6	38970-61M00	SWITCH ASSY, A/B ON OFF	1	
7-1	37740-62R00	SWITCH ASSY, STOP LAMP	1	GL:2WD
7-2	37740-62R10	SWITCH ASSY, STOP LAMP	1	GL:4WD
7-3	37740-62R10	SWITCH ASSY, STOP LAMP	1	GLX
8	37742-75H10	BUSH, STOP LAMP SW	1	
9	38910-86R00	CONTROLLER ASSY, A/B	1	
10	09115-06004	BOLT (6X16)	3	
11	37160-61M11	BASE ASSY, TPMS	1	
12	36772-61M00	BRACKET, TPMS CONT	1	
13	03141-0512A	SCREW	1	
14-1	37171-86R10	CONTROLLER ASSY, KEYLESS	1	N/PUSH START
14-2	37171-86RE0	CONTROLLER ASSY, KEYLESS	1	W/PUSH START
15	08316-1008A	NUT	2	
16	37175-54P00	ANTENNA ASSY, KLS INSIDE	1	W/PUSH START
17-1	33680-53S00	CONTROLLER ASSY, IDLE STOP	1	5MT
17-2	33680-53SB0	CONTROLLER ASSY, IDLE STOP	1	6AT
18	09159-06076	NUT	2	
19	33570-71M00	CONVERTER ASSY, DC/DC	1	6AT
20	33571-54P10	BRACKET, DC/DC CONVERTER	1	6AT
21	08316-1008A	NUT	2	6AT
22	02162-0610A	SCREW	2	6AT
23	37970-64J00	SWITCH ASSY, CLUTCH	1	5MT
24	09140-10043	NUT	1	5MT

NOTE : TYPE 3:RHD:K10C

FIG.351D

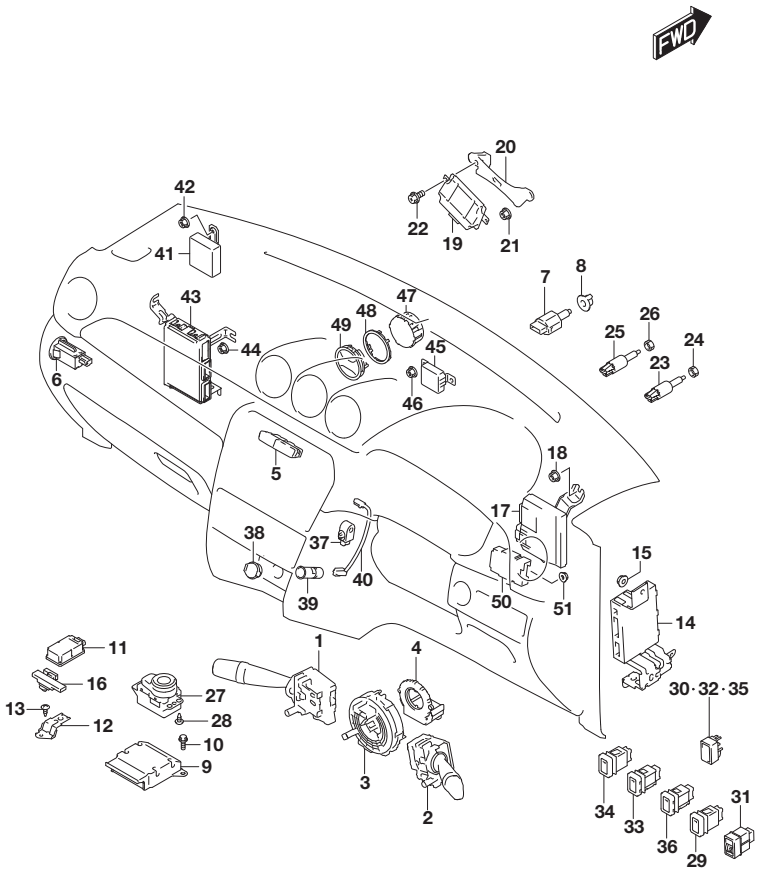

FIG.351D (2-J-5) ELECTRICAL CONTROL INSTRUMENTAL PANEL (SEE NOTE)

REF NO.	PART NO.	DESCRIPTION	Q'TY	REMARKS
25	37970-68J00	SWITCH ASSY, CLUTCH	1	5MT
26	09140-10043	NUT	1	5MT
27	37790-61M00	SWITCH ASSY, 4WD SELECT	1	4WD
28	03541-0412A	SCREW	3	4WD
29	37270-68L00	SWITCH ASSY, FR FOG	1	W/FRONT FOG LAMP
30	37285-62JA0	CAP, OPTION SW HOLE	1	N/FRONT FOG LAMP
31	35180-51KB0	SWITCH ASSY, HEADLAMP LEVELING	1	GL
32	37285-62JA0	CAP, OPTION SW HOLE	1	GLX
33-1	37780-61M00	SWITCH ASSY, ID STOP OFF	1	2WD
33-2	37780-54P90	SWITCH ASSY, ID STOP OFF & HILL	1	4WD
34	37690-53S00	SWITCH ASSY, AEB OFF & LDW	1	W/AEB MONAURAL CAMERA
35	37285-62JA0	CAP, OPTION SW HOLE	1	N/AEB CAMERA
36-1	37585-68L00	SWITCH ASSY, ESP OFF	1	GL
36-2	37585-61M90	SWITCH ASSY, ESP OFF & CL SNSR	1	GLX
37	37734-54P00	BUZZER, PARK SNSR	2	GLX
38	39411-86G00	CAP, ACC SOCKET	1	
39	39410-86G00	ACCESSORY SOCKET	1	
40	39460-61M00	HARNESS ASSY, SOCKET	1	
41	38620-54P01	CONTROLLER ASSY, AUTO LEVELING	1	GLX
42	09159-06076	NUT	1	GLX
43-1	36770-86R20	CONTROLLER ASSY, BODY ELEC	1	W/BULB DRL
43-2	36770-86R30	CONTROLLER ASSY, BODY ELEC	1	W/LED DRL
44	09159-06076	NUT	3	
45	33975-61M01	CONTROLLER ASSY, ID	1	
46	09159-06076	NUT	2	
47	34600-53S00	CLOCK ASSY	1	GLX
48	34615-54P00-PEQ	BEZEL ASSY, CLOCK (BLACK)	1	GLX
49-1	34630-54P00-5PK	CAP, CLOCK HOLE (BLACK)	1	GL COLOR:BLACK
49-2	34630-54P00-AQS	CAP, CLOCK HOLE (BLACK)	1	GL COLOR:CHROME BLACK

NOTE : TYPE 3:RHD:K10C

FIG.351D

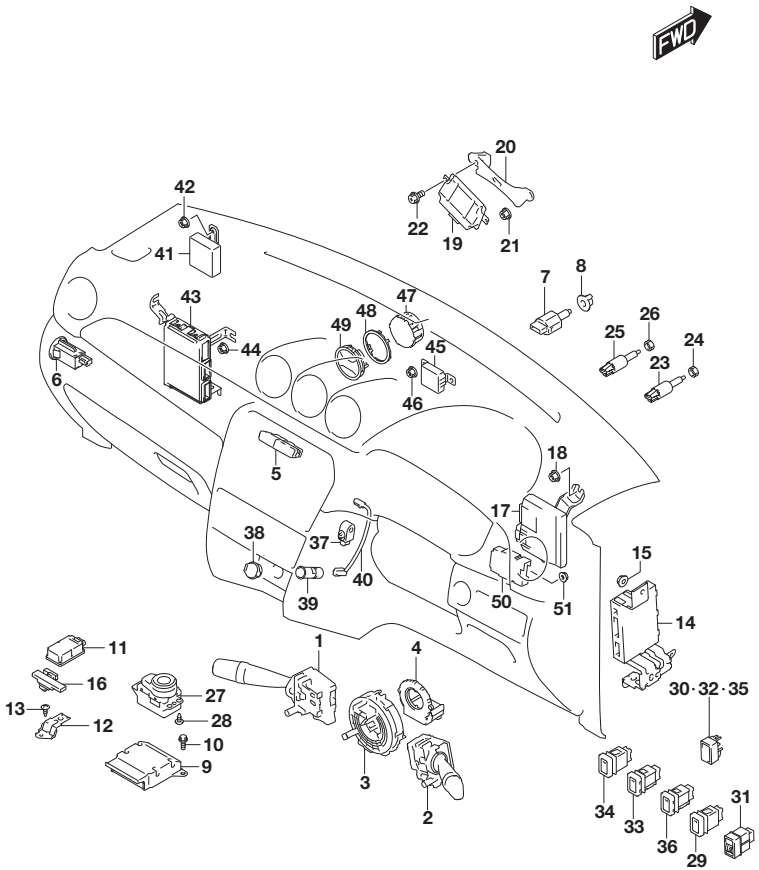

FIG.351D (2-J-6) ELECTRICAL CONTROL INSTRUMENTAL PANEL (SEE NOTE)

REF NO.	PART NO.	DESCRIPTION	Q'TY	REMARKS
50	33580-86R01	CONTROLLER ASSY, GATEWAY	1	
51	08316-1006A	NUT	1	

NOTE : TYPE 3:RHD:K10C

FIG.351E

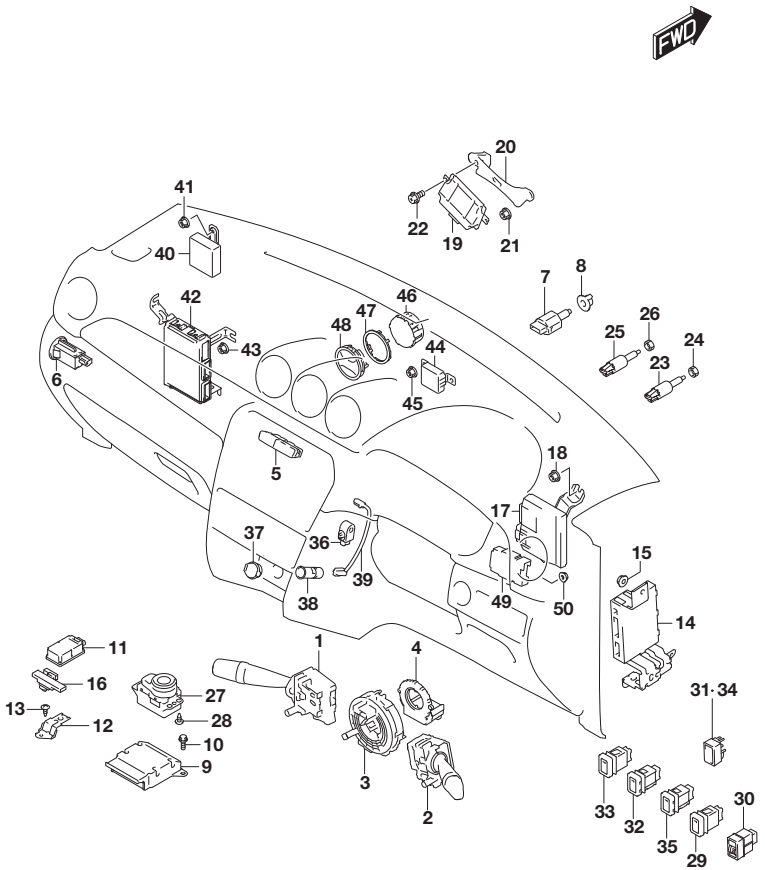

FIG.351E (2-J-7) ELECTRICAL CONTROL INSTRUMENTAL PANEL (SEE NOTE)

REF NO.	PART NO.	DESCRIPTION	Q'TY	REMARKS
1-1	37210-61M60	SWITCH ASSY, LIGHTING & TURN	1	GL
1-2	37210-61M50	SWITCH ASSY, LIGHTING & TURN	1	GLX
2-1	37310-68L10	SWITCH ASSY, WIPER & WASHER	1	GL
2-2	37310-68L20	SWITCH ASSY, WIPER & WASHER	1	GLX
3	37480-64J70	CABLE ASSY, CONTACT COIL	1	
4	37440-68L10	SENSOR ASSY, ANGLE	1	
5	37430-54P10-5PK	SWITCH ASSY, HAZARD WARNING (BLACK)	1	
6	38970-61M00	SWITCH ASSY, A/B ON OFF	1	
7-1	37740-62R00	SWITCH ASSY, STOP LAMP	1	GL:2WD
7-2	37740-62R10	SWITCH ASSY, STOP LAMP	1	GL:4WD
7-3	37740-62R10	SWITCH ASSY, STOP LAMP	1	GLX
8	37742-75H10	BUSH, STOP LAMP SW	1	
9	38910-86R00	CONTROLLER ASSY, A/B	1	
10	09115-06004	BOLT (6X16)	3	
11	37160-61M11	BASE ASSY, TPMS	1	
12	36772-61M00	BRACKET, TPMS CONT	1	
13	03141-0512A	SCREW	1	
14-1	37171-86R10	CONTROLLER ASSY, KEYLESS	1	N/PUSH START
14-2	37171-86RE0	CONTROLLER ASSY, KEYLESS	1	W/PUSH START
15	08316-1008A	NUT	2	
16	37175-54P00	ANTENNA ASSY, KLS INSIDE	1	W/PUSH START
17-1	33680-53S00	CONTROLLER ASSY, IDLE STOP	1	6MT
17-2	33680-53SB0	CONTROLLER ASSY, IDLE STOP	1	6AT
18	09159-06076	NUT	2	
19	33570-71M00	CONVERTER ASSY, DC/DC	1	6AT
20	33571-54P10	BRACKET, DC/DC CONVERTER	1	6AT
21	08316-1008A	NUT	2	6AT
22	02162-0610A	SCREW	2	6AT
23	37970-64J00	SWITCH ASSY, CLUTCH	1	6MT
24	09140-10043	NUT	1	6MT
25	37970-68J00	SWITCH ASSY, CLUTCH	1	6MT

NOTE : TYPE 3:RHD:K14C

FIG.351E

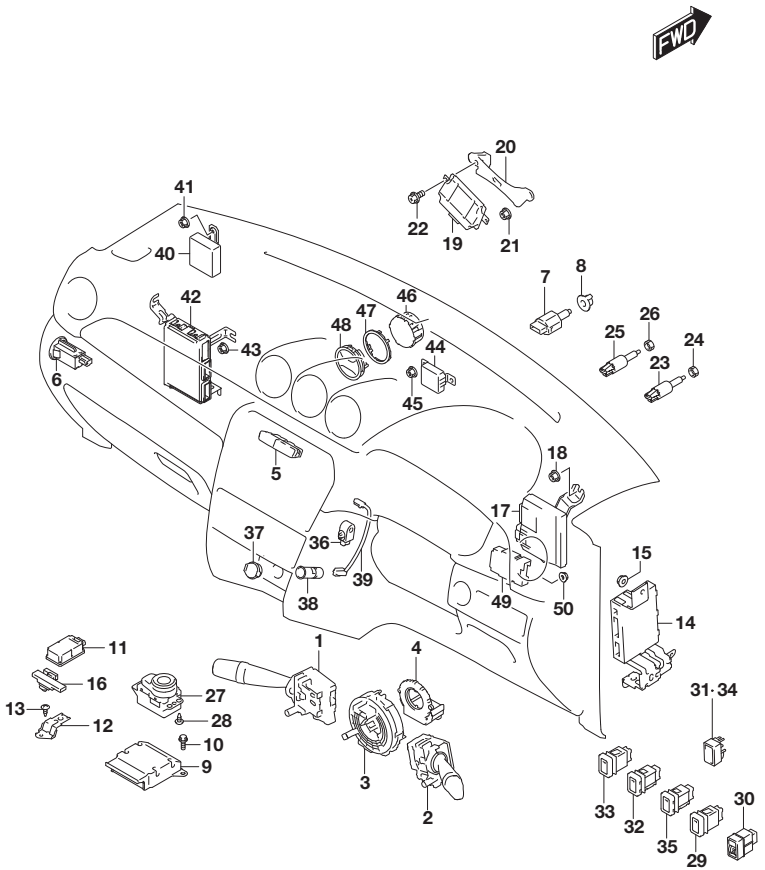

FIG.351E (2-J-8) ELECTRICAL CONTROL INSTRUMENTAL PANEL (SEE NOTE)

REF NO.	PART NO.	DESCRIPTION	Q'TY	REMARKS
26	09140-10043	NUT	1	6MT
27	37790-61M00	SWITCH ASSY, 4WD SELECT	1	4WD
28	03541-0412A	SCREW	3	4WD
29	37270-68L00	SWITCH ASSY, FR FOG	1	
30	35180-51KB0	SWITCH ASSY, HEADLAMP LEVELING	1	GL
31	37285-62JA0	CAP, OPTION SW HOLE	1	GLX
32-1	37780-61M00	SWITCH ASSY, ID STOP OFF	1	2WD
32-2	37780-54P90	SWITCH ASSY, ID STOP OFF & HILL	1	4WD
33	37690-53S00	SWITCH ASSY, AEB OFF & LDW	1	W/AEB MONAURAL CAMERA
34	37285-62JA0	CAP, OPTION SW HOLE	1	N/AEB CAMERA
35-1	37585-68L00	SWITCH ASSY, ESP OFF	1	GL
35-2	37585-61M90	SWITCH ASSY, ESP OFF & CL SNSR	1	GLX
36	37734-54P00	BUZZER, PARK SNSR	2	GLX
37	39411-86G00	CAP, ACC SOCKET	1	
38	39410-86G00	ACCESSORY SOCKET	1	
39	39460-61M00	HARNESS ASSY, SOCKET	1	
40	38620-54P01	CONTROLLER ASSY, AUTO LEVELING	1	GLX
41	09159-06076	NUT	1	GLX
42	36770-86R30	CONTROLLER ASSY, BODY ELEC	1	
43	09159-06076	NUT	3	
44	33975-61M01	CONTROLLER ASSY, ID	1	
45	09159-06076	NUT	2	
46	34600-53S00	CLOCK ASSY	1	GLX
47	34615-54P00-PEQ	BEZEL ASSY, CLOCK (BLACK)	1	GLX
48	34630-54P00-AQS	CAP, CLOCK HOLE (BLACK)	1	GL
49	33580-86R01	CONTROLLER ASSY, GATEWAY	1	
50	08316-1006A	NUT	1	

NOTE : TYPE 3:RHD:K14C

FIG.351F

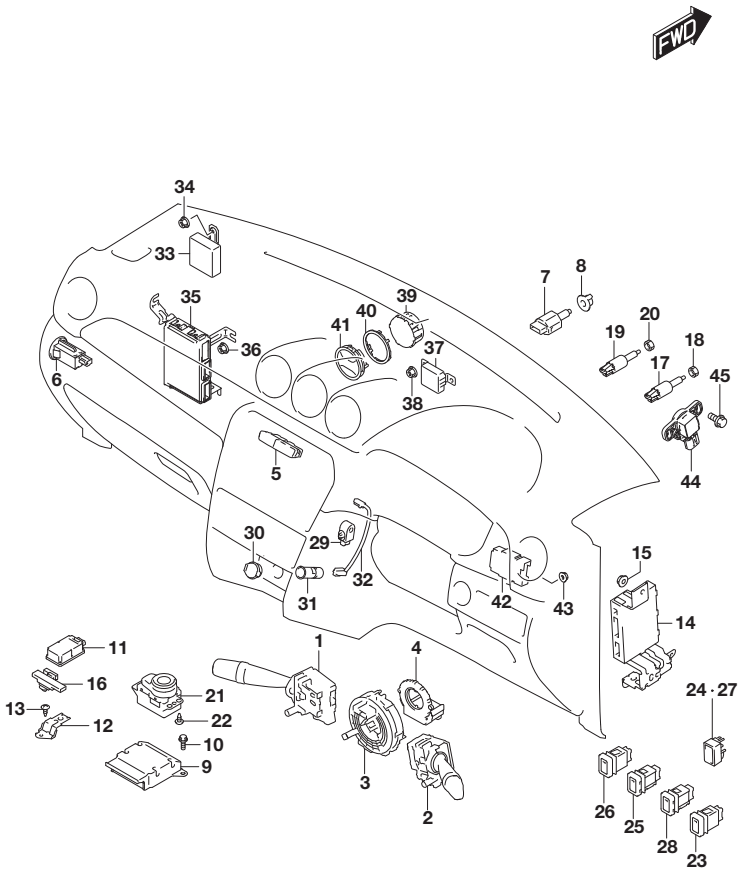

FIG.351F (2-J-9) ELECTRICAL CONTROL INSTRUMENTAL PANEL (SEE NOTE)

REF NO.	PART NO.	DESCRIPTION	Q'TY	REMARKS
1	37210-61M50	SWITCH ASSY, LIGHTING & TURN	1	
2	37310-68L20	SWITCH ASSY, WIPER & WASHER	1	
3	37480-64J70	CABLE ASSY, CONTACT COIL	1	
4	37440-68L10	SENSOR ASSY, ANGLE	1	
5	37430-54P10-5PK	SWITCH ASSY, HAZARD WARNING (BLACK)	1	
6	38970-61M00	SWITCH ASSY, A/B ON OFF	1	
7-1	37740-62R00	SWITCH ASSY, STOP LAMP	1	N/AEB CAMERA
7-2	37740-62R10	SWITCH ASSY, STOP LAMP	1	W/AEB MONAURAL CAMERA
8	37742-75H10	BUSH, STOP LAMP SW	1	
9	38910-86R00	CONTROLLER ASSY, A/B	1	
10	09115-06004	BOLT (6X16)	3	
11	37160-61M11	BASE ASSY, TPMS	1	
12	36772-61M00	BRACKET, TPMS CONT	1	
13	03141-0512A	SCREW	1	
14-1	37171-86R10	CONTROLLER ASSY, KEYLESS	1	N/PUSH START
14-2	37171-86RE0	CONTROLLER ASSY, KEYLESS	1	W/PUSH START
15	08316-1008A	NUT	2	
16	37175-54P00	ANTENNA ASSY, KLS INSIDE	1	W/PUSH START
17	37970-64J00	SWITCH ASSY, CLUTCH	1	
18	09140-10043	NUT	1	
19	37970-68J00	SWITCH ASSY, CLUTCH	1	
20	09140-10043	NUT	1	
21	37790-61M00	SWITCH ASSY, 4WD SELECT	1	4WD
22	03541-0412A	SCREW	3	4WD
23	37270-68L00	SWITCH ASSY, FR FOG	1	
24	37285-62JA0	CAP, OPTION SW HOLE	1	
25-1	37780-61M00	SWITCH ASSY, ID STOP OFF	1	2WD
25-2	37780-54P90	SWITCH ASSY, ID STOP OFF & HILL	1	4WD
26	37690-53S00	SWITCH ASSY, AEB OFF & LDW	1	W/AEB MONAURAL CAMERA
27	37285-62JA0	CAP, OPTION SW HOLE	1	N/AEB CAMERA

NOTE : TYPE 3:RHD:K14D

FIG.351F

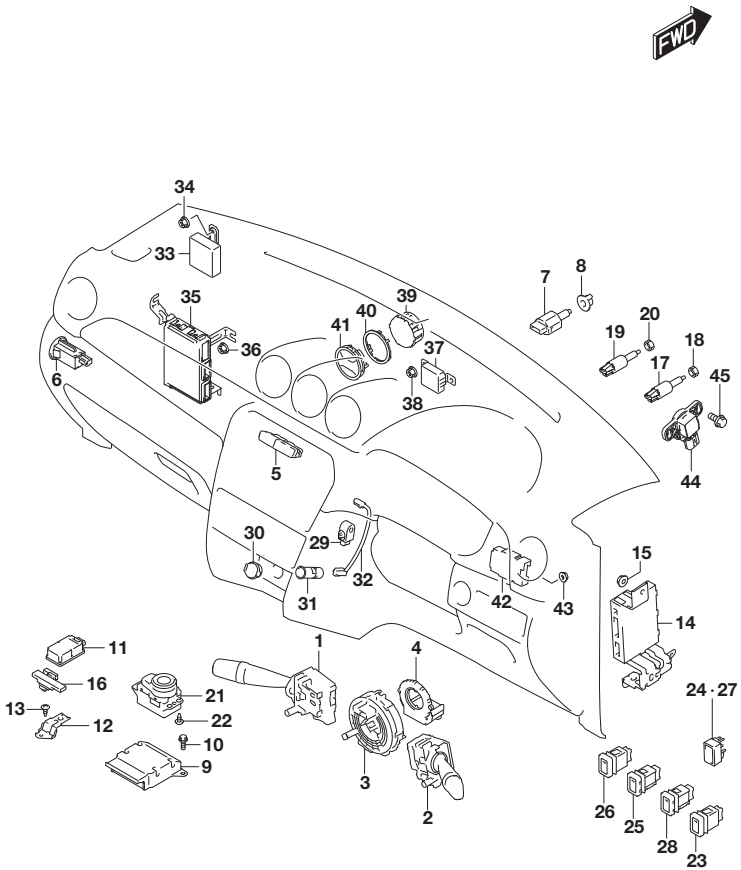

FIG.351F (2-J-10) ELECTRICAL CONTROL INSTRUMENTAL PANEL (SEE NOTE)

REF NO.	PART NO.	DESCRIPTION	Q'TY	REMARKS
28-1	37585-68L00	SWITCH ASSY, ESP OFF	1	GL
28-2	37585-61M90	SWITCH ASSY, ESP OFF & CL SNSR	1	GLX
29	37734-54P00	BUZZER, PARK SNSR	2	GLX
30	39411-86G00	CAP, ACC SOCKET	1	
31	39410-86G00	ACCESSORY SOCKET	1	
32	39460-61M00	HARNESS ASSY, SOCKET	1	
33	38620-54P10	CONTROLLER ASSY, AUTO LEVELING	1	
34	09159-06076	NUT	1	
35-1	36770-86R20	CONTROLLER ASSY, BODY ELEC	1	N/FOOT ILLUMINATION
35-2	36770-86R30	CONTROLLER ASSY, BODY ELEC	1	W/FOOT ILLUMINATION
36	09159-06076	NUT	3	
37	33975-61M01	CONTROLLER ASSY, ID	1	
38	09159-06076	NUT	2	
39	34600-53S00	CLOCK ASSY	1	GLX
40	34615-54P00-PEQ	BEZEL ASSY, CLOCK (BLACK)	1	GLX
41-1	34630-54P00-5PK	CAP, CLOCK HOLE (BLACK)	1	GL COLOR:BLACK
41-2	34630-54P00-AQS	CAP, CLOCK HOLE (BLACK)	1	GL COLOR:CHROME BLACK
42	33580-57T00	CONTROLLER ASSY, GATEWAY	1	
43	08316-1006A	NUT	1	
44	91480-74S00	SENSOR ASSY, BRAKE STROKE	1	
45	01550-0616A	BOLT	1	

NOTE : TYPE 3:RHD:K14D

FIG.351G

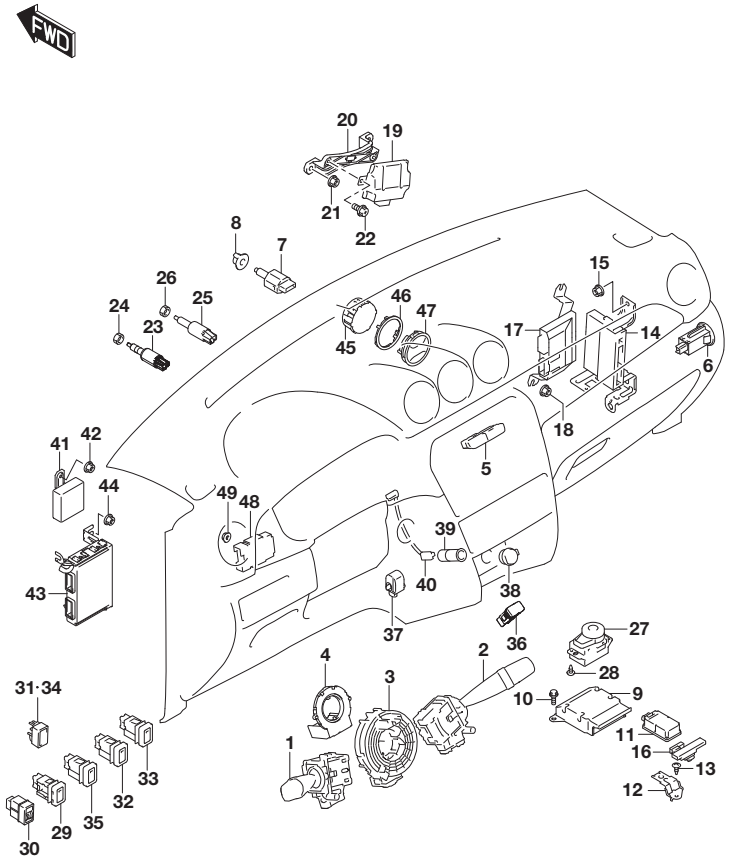

FIG.351G (2-J-11) ELECTRICAL CONTROL INSTRUMENTAL PANEL (SEE NOTE)

REF NO.	PART NO.	DESCRIPTION	Q'TY	REMARKS
1-1	37210-61M60	SWITCH ASSY, LIGHTING & TURN	1	GL
1-2	37210-61M50	SWITCH ASSY, LIGHTING & TURN	1	GLX
2-1	37310-68L10	SWITCH ASSY, WIPER & WASHER	1	GL
2-2	37310-68L20	SWITCH ASSY, WIPER & WASHER	1	GLX
3	37480-64J70	CABLE ASSY, CONTACT COIL	1	
4	37440-68L10	SENSOR ASSY, ANGLE	1	
5	37430-54P10-5PK	SWITCH ASSY, HAZARD WARNING (BLACK)	1	
6	38970-61M00	SWITCH ASSY, A/B ON OFF	1	
7-1	37740-62R00	SWITCH ASSY, STOP LAMP	1	GL:2WD
7-2	37740-62R10	SWITCH ASSY, STOP LAMP	1	GL:4WD
7-3	37740-62R10	SWITCH ASSY, STOP LAMP	1	GLX
8	37742-75H10	BUSH, STOP LAMP SW	1	
9	38910-86R00	CONTROLLER ASSY, A/B	1	
10	09115-06004	BOLT (6X16)	3	
11	37160-61M11	BASE ASSY, TPMS	1	
12	36772-61M00	BRACKET, TPMS CONT	1	
13	03141-0512A	SCREW	1	
14-1	37171-86R01	CONTROLLER ASSY, KEYLESS	1	N/PUSH START
14-2	37171-86RE0	CONTROLLER ASSY, KEYLESS	1	W/PUSH START
15	08316-1008A	NUT	2	
16	37175-54P00	ANTENNA ASSY, KLS INSIDE	1	W/PUSH START
17-1	33680-53S00	CONTROLLER ASSY, IDLE STOP	1	6MT
17-2	33680-53SB0	CONTROLLER ASSY, IDLE STOP	1	6AT
18	09159-06076	NUT	2	
19	33570-71M00	CONVERTER ASSY, DC/DC	1	6AT
20	33571-54P00	BRACKET, DC/DC CONVERTER	1	6AT
21	08316-1008A	NUT	2	6AT
22	02162-0610A	SCREW	2	6AT
23	37970-64J00	SWITCH ASSY, CLUTCH	1	6MT
24	09140-10043	NUT	1	6MT
25	37970-68J00	SWITCH ASSY, CLUTCH	1	6MT

NOTE : TYPE 4:LHD

FIG.351G

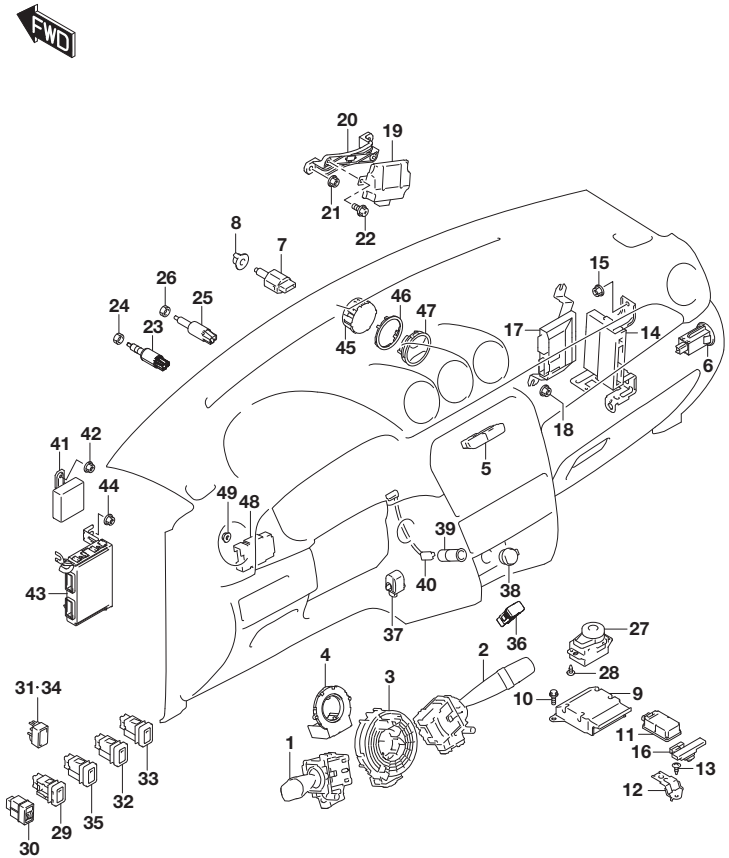

FIG.351G (2-J-12) ELECTRICAL CONTROL INSTRUMENTAL PANEL (SEE NOTE)

REF NO.	PART NO.	DESCRIPTION	Q'TY	REMARKS
26	09140-10043	NUT	1	6MT
27	37790-61M00	SWITCH ASSY, 4WD SELECT	1	4WD
28	03541-0412A	SCREW	3	4WD
29	37270-68L00	SWITCH ASSY, FR FOG	1	
30	35180-51KB0	SWITCH ASSY, HEADLAMP LEVELING	1	GL
31	37285-62JA0	CAP, OPTION SW HOLE	1	GLX
32-1	37780-61M00	SWITCH ASSY, ID STOP OFF	1	2WD
32-2	37780-54P90	SWITCH ASSY, ID STOP OFF & HILL	1	4WD
33	37690-53S00	SWITCH ASSY, AEB OFF & LDW	1	W/AEB MONAURAL CAMERA
34	37285-62JA0	CAP, OPTION SW HOLE	1	N/AEB CAMERA
35-1	37585-68L00	SWITCH ASSY, ESP OFF	1	GL
35-2	37585-61M90	SWITCH ASSY, ESP OFF & CL SNSR	1	GLX
36	37850-61M00	SWITCH ASSY, SEAT HEATER	2	W/SEAT HEATER
37	37734-54P00	BUZZER, PARK SNSR	2	GLX
38	39411-86G00	CAP, ACC SOCKET	1	
39	39410-86G00	ACCESSORY SOCKET	1	
40	39460-61M00	HARNESS ASSY, SOCKET	1	
41	38620-54P01	CONTROLLER ASSY, AUTO LEVELING	1	GLX
42	09159-06076	NUT	1	GLX
43	36770-86R10	CONTROLLER ASSY, BODY ELEC	1	
44	09159-06076	NUT	3	
45	34600-53S00	CLOCK ASSY	1	GLX
46	34615-54P00-PEQ	BEZEL ASSY, CLOCK (BLACK)	1	GLX
47	34630-54P00-AQS	CAP, CLOCK HOLE (BLACK)	1	GL
48	33580-86R01	CONTROLLER ASSY, GATEWAY	1	
49	08316-1006A	NUT	1	

NOTE : TYPE 4:LHD

FIG.351H

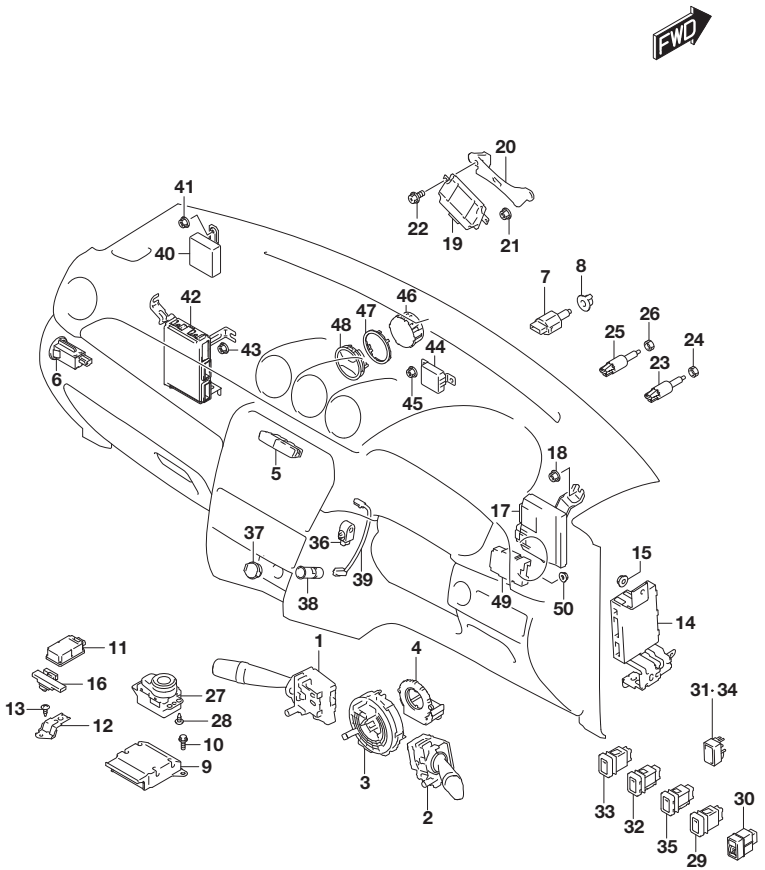

FIG.351H (2-J-13) ELECTRICAL CONTROL INSTRUMENTAL PANEL (SEE NOTE)

REF NO.	PART NO.	DESCRIPTION	Q'TY	REMARKS
1-1	37210-61M60	SWITCH ASSY, LIGHTING & TURN	1	GL
1-2	37210-61M50	SWITCH ASSY, LIGHTING & TURN	1	GLX
2-1	37310-68L10	SWITCH ASSY, WIPER & WASHER	1	GL
2-2	37310-68L20	SWITCH ASSY, WIPER & WASHER	1	GLX
3	37480-64J70	CABLE ASSY, CONTACT COIL	1	
4	37440-68L10	SENSOR ASSY, ANGLE	1	
5	37430-54P10-5PK	SWITCH ASSY, HAZARD WARNING (BLACK)	1	
6	38970-61M00	SWITCH ASSY, A/B ON OFF	1	
7-1	37740-62R00	SWITCH ASSY, STOP LAMP	1	GL:2WD
7-2	37740-62R10	SWITCH ASSY, STOP LAMP	1	GL:4WD
7-3	37740-62R10	SWITCH ASSY, STOP LAMP	1	GLX
8	37742-75H10	BUSH, STOP LAMP SW	1	
9	38910-86R00	CONTROLLER ASSY, A/B	1	
10	09115-06004	BOLT (6X16)	3	
11	37160-61M11	BASE ASSY, TPMS	1	
12	36772-61M00	BRACKET, TPMS CONT	1	
13	03141-0512A	SCREW	1	
14-1	37171-86R10	CONTROLLER ASSY, KEYLESS	1	N/PUSH START
14-2	37171-86RE0	CONTROLLER ASSY, KEYLESS	1	W/PUSH START
15	08316-1008A	NUT	2	
16	37175-54P00	ANTENNA ASSY, KLS INSIDE	1	W/PUSH START
17-1	33680-53S00	CONTROLLER ASSY, IDLE STOP	1	6MT
17-2	33680-53SB0	CONTROLLER ASSY, IDLE STOP	1	6AT
18	09159-06076	NUT	2	
19	33570-71M00	CONVERTER ASSY, DC/DC	1	6AT
20	33571-54P10	BRACKET, DC/DC CONVERTER	1	6AT
21	08316-1008A	NUT	2	6AT
22	02162-0610A	SCREW	2	6AT
23	37970-64J00	SWITCH ASSY, CLUTCH	1	6MT
24	09140-10043	NUT	1	6MT
25	37970-68J00	SWITCH ASSY, CLUTCH	1	6MT

NOTE : TYPE 4:RHD

FIG.351H

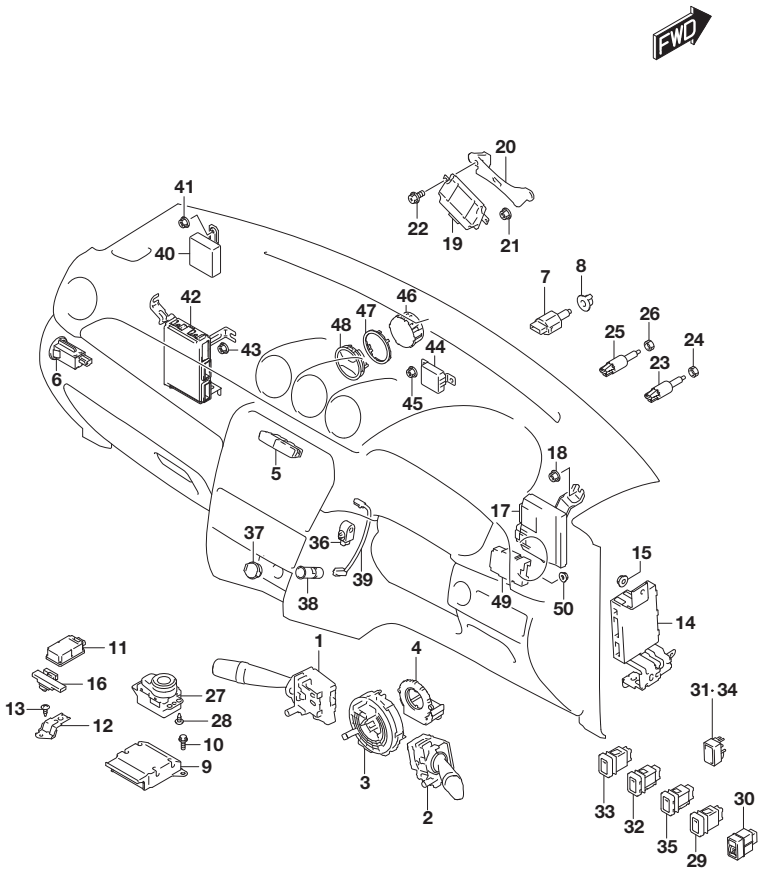

FIG.351H (2-J-14) ELECTRICAL CONTROL INSTRUMENTAL PANEL (SEE NOTE)

REF NO.	PART NO.	DESCRIPTION	Q'TY	REMARKS
26	09140-10043	NUT	1	6MT
27	37790-61M00	SWITCH ASSY, 4WD SELECT	1	4WD
28	03541-0412A	SCREW	3	4WD
29	37270-68L00	SWITCH ASSY, FR FOG	1	
30	35180-51KB0	SWITCH ASSY, HEADLAMP LEVELING	1	GL
31	37285-62JA0	CAP, OPTION SW HOLE	1	GLX
32-1	37780-61M00	SWITCH ASSY, ID STOP OFF	1	2WD
32-2	37780-54P90	SWITCH ASSY, ID STOP OFF & HILL	1	4WD
33	37690-53S00	SWITCH ASSY, AEB OFF & LDW	1	W/AEB MONAURAL CAMERA
34	37285-62JA0	CAP, OPTION SW HOLE	1	N/AEB CAMERA
35-1	37585-68L00	SWITCH ASSY, ESP OFF	1	GL
35-2	37585-61M90	SWITCH ASSY, ESP OFF & CL SNSR	1	GLX
36	37734-54P00	BUZZER, PARK SNSR	2	GLX
37	39411-86G00	CAP, ACC SOCKET	1	
38	39410-86G00	ACCESSORY SOCKET	1	
39	39460-61M00	HARNESS ASSY, SOCKET	1	
40	38620-54P01	CONTROLLER ASSY, AUTO LEVELING	1	GLX
41	09159-06076	NUT	1	GLX
42	36770-86R30	CONTROLLER ASSY, BODY ELEC	1	
43	09159-06076	NUT	3	
44	33975-61M01	CONTROLLER ASSY, ID	1	
45	09159-06076	NUT	2	
46	34600-53S00	CLOCK ASSY	1	GLX
47	34615-54P00-PEQ	BEZEL ASSY, CLOCK (BLACK)	1	GLX
48	34630-54P00-AQS	CAP, CLOCK HOLE (BLACK)	1	GL
49	33580-86R01	CONTROLLER ASSY, GATEWAY	1	
50	08316-1006A	NUT	1	

NOTE : TYPE 4:RHD

FIG.360A

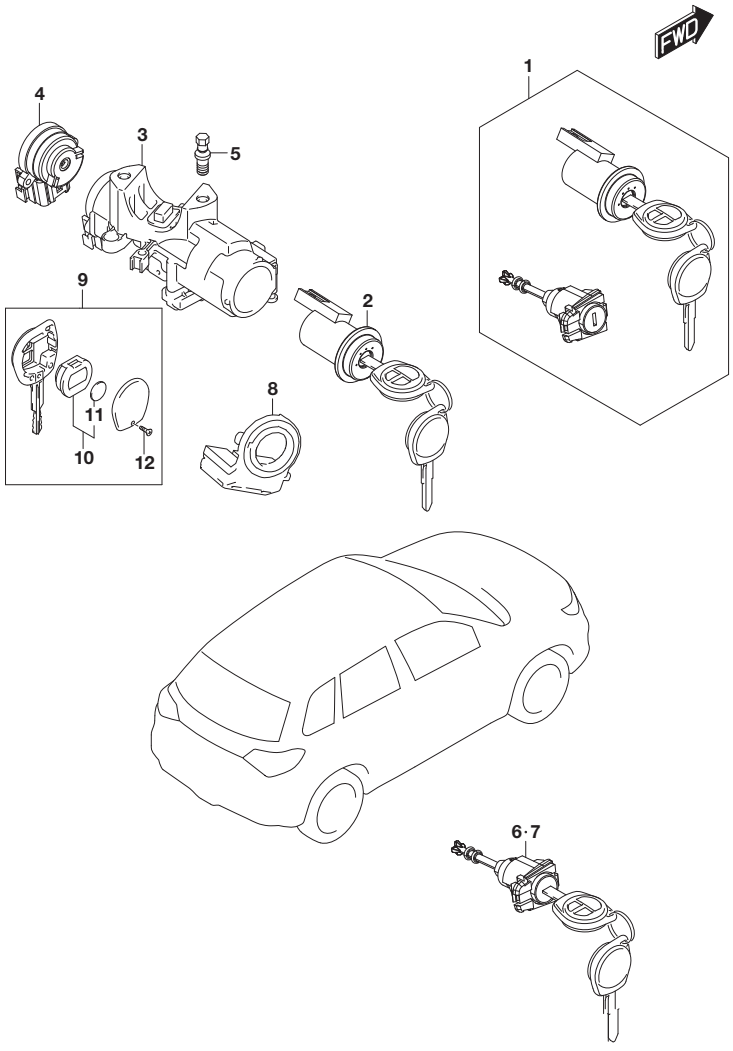

FIG.360A (2-K-2) LOCK SET (N/PUSH START:(5MT,6MT))

REF NO.	PART NO.	DESCRIPTION	Q'TY	REMARKS
1-1	3710A-54882	LOCK SET	1	LHD
1-2	3710A-54842	LOCK SET	1	RHD
2	3710A-54852	LOCK SET, STEERING	1	
3	37101-68L30	BODY, STEERING LOCK	1	
4	37111-62JA0	SWITCH	1	
5	37152-68L00	BOLT, STEERING LOCK	2	
6	82270-54861	CYLINDER SET, FR DR LATCH RH	1	RHD
7	82280-54841	CYLINDER SET, FR DR LATCH LH	1	LHD
8	33970-54P01	CONTROLLER ASSY, IMM	1	
9	37145-54P02	KEY, BLANK	1	OPT
10	37182-54P01	.SWITCH ASSY, TRANSMITTER	1	
11	37185-54G10	..BATTERY (CR1616) (OMRON)	1	
12	37186-81A00	.SCREW	1	

FIG.360B

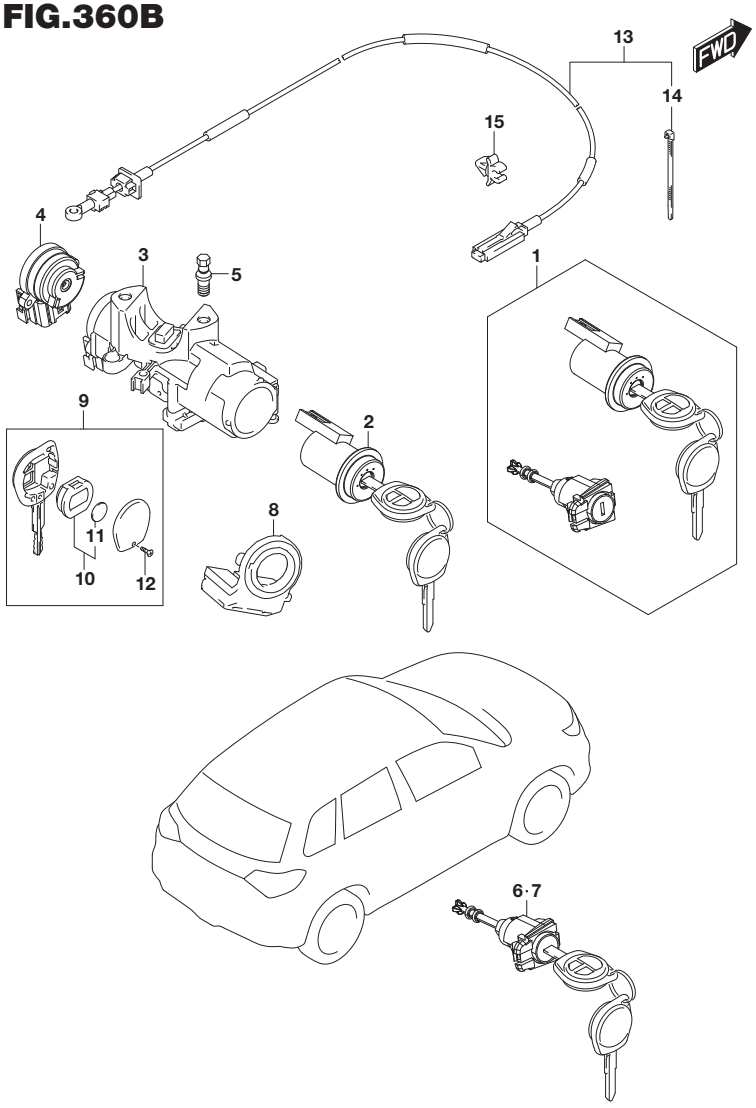

FIG.360B (2-K-3) LOCK SET (N/PUSH START:6AT)

REF NO.	PART NO.	DESCRIPTION	Q'TY	REMARKS
1-1	3710A-54892	LOCK SET	1	LHD
1-2	3710A-54862	LOCK SET	1	RHD
2	3710A-54872	LOCK ASSY, STEERING	1	
3	37101-68L40	BODY, STEERING LOCK	1	
4	37111-62JA0	SWITCH	1	
5	37152-68L00	BOLT, STEERING LOCK	2	
6	82270-54861	CYLINDER SET, FR DR LATCH RH	1	RHD
7	82280-54841	CYLINDER SET, FR DR LATCH LH	1	LHD
8	33970-54P01	CONTROLLER ASSY, IMM	1	
9	37145-54P02	KEY, BLANK	1	OPT
10	37182-54P01	.SWITCH ASSY, TRANSMITTER	1	
11	37185-54G10	..BATTERY (CR1616) (OMRON)	1	
12	37186-81A00	.SCREW	1	
13-1	28551-54P30	CABLE, KEY INTERLOCK	1	LHD
13-2	28551-61M10	CABLE, KEY INTERLOCK	1	RHD
14	09407-14413	.CLAMP	1	RHD
15	75411-76G00	CLAMP, CABLE	1	RHD

FIG.360C

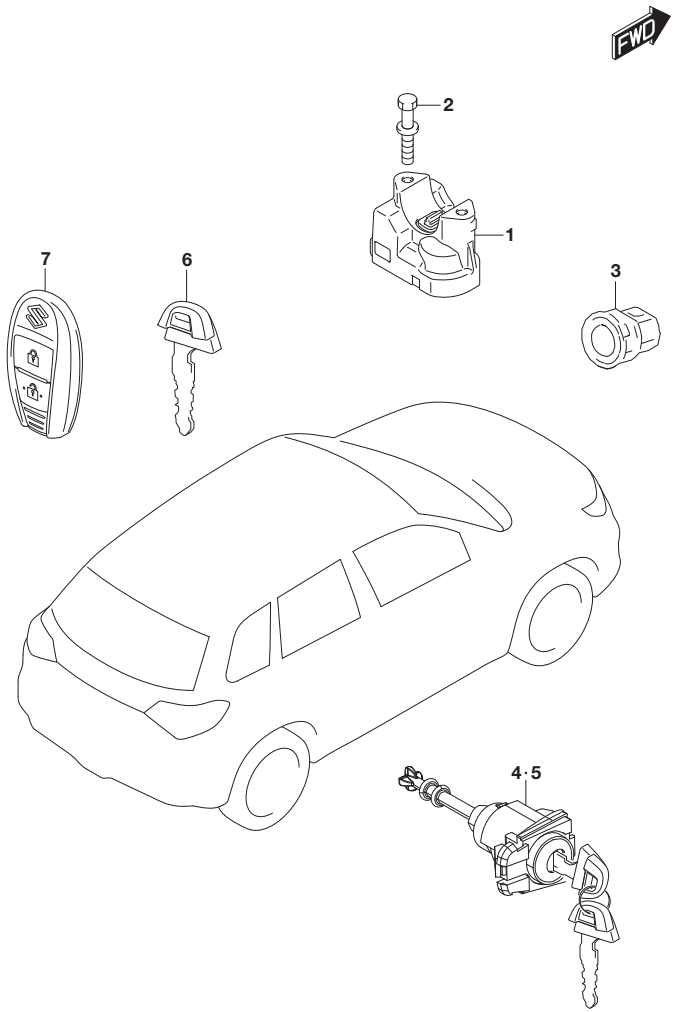

FIG.360C (2-K-4) LOCK SET (W/PUSH START)

REF NO.	PART NO.	DESCRIPTION	Q'TY	REMARKS
1	37100-68L63	LOCK ASSY, AUTO STEERING	1	
2	37152-68L00	BOLT, STEERING LOCK	2	
3	37290-54P01	SWITCH ASSY, ENGINE START	1	
4	82270-54870	CYLINDER SET, FR DR LATCH RH	1	RHD
5	82280-54850	CYLINDER SET, FR DR LATCH LH	1	LHD
6	37145-68L50	KEY, BLANK	1	OPT
7	37172-54P02	REMOCON ASSY, KEYLESS	1	

FIG.370A

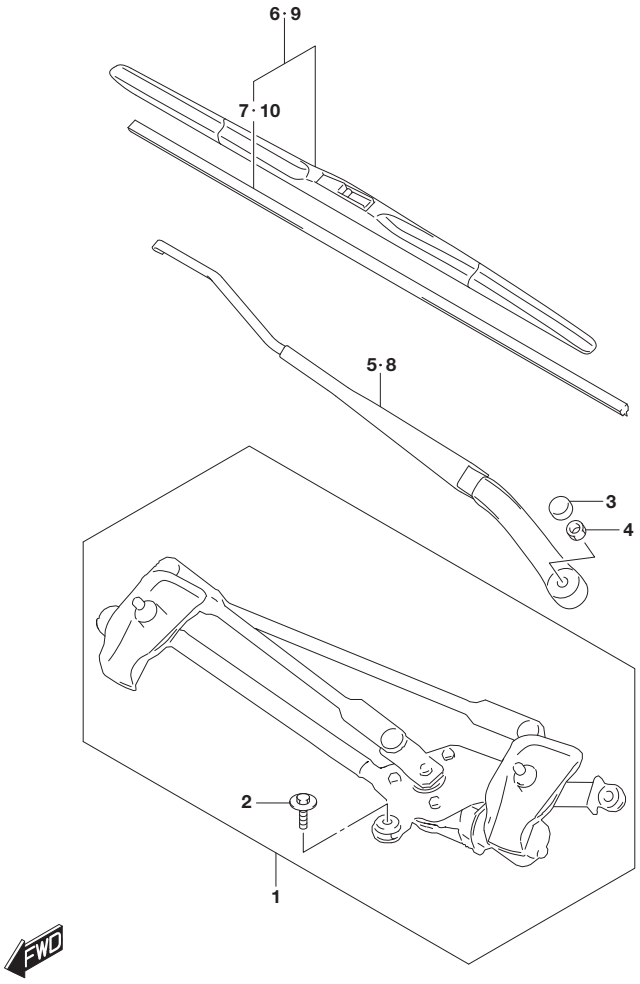

FIG.370A (2-K-5) FRONT WINDOW WIPER (LHD)

REF NO.	PART NO.	DESCRIPTION	Q'TY	REMARKS
1	38100-54P00	WIPER ASSY, WINDSHIELD	1	
2	38116-73H00	.BOLT, WIPER MOTOR	3	
3	84996-65DA0	CAP	2	
4	08310-0010A	NUT	2	
5	38310-54P00	ARM ASSY, WIPER DRIVER	1	DRIVER SIDE
6	38340-54P00	BLADE ASSY, WIPER DRIVER	1	DRIVER SIDE
7	38346-54P00	.RUBBER, BLADE	1	DRIVER SIDE
8	38330-54P00	ARM ASSY, WIPER ASSISTANT	1	ASSISTANT SIDE
9	38340-54P30	BLADE ASSY, WIPER ASSISTANT	1	ASSISTANT SIDE
10	38346-54P10	.RUBBER, BLADE	1	ASSISTANT SIDE

FIG.370B

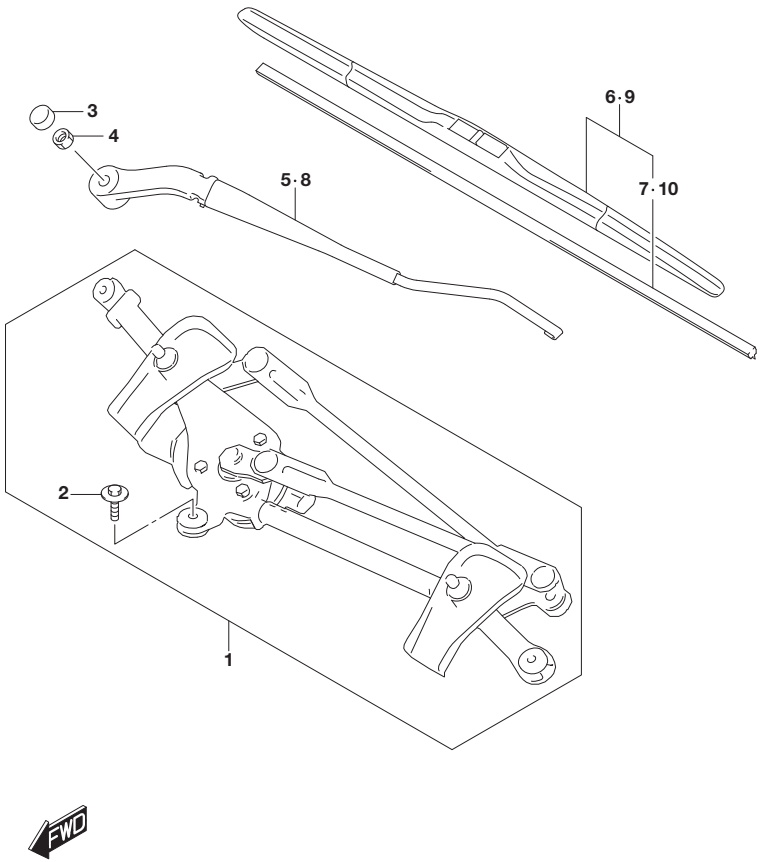

FIG.370B (2-K-6) FRONT WINDOW WIPER (RHD)

REF NO.	PART NO.	DESCRIPTION	Q'TY	REMARKS
1	38100-54P10	WIPER ASSY, WINDSHIELD	1	
2	38116-73H00	.BOLT, WIPER MOTOR	3	
3	84996-65DA0	CAP	2	
4	08310-0010A	NUT	2	
5	38310-54P10	ARM ASSY, WIPER DRIVER	1	DRIVER SIDE
6	38340-54P10	BLADE ASSY, WIPER DRIVER	1	DRIVER SIDE
7	38346-54P00	.RUBBER, BLADE	1	DRIVER SIDE
8	38330-54P10	ARM ASSY, WIPER ASSISTANT	1	ASSISTANT SIDE
9	38340-54P40	BLADE ASSY, WIPER ASSISTANT	1	ASSISTANT SIDE
10	38346-54P10	.RUBBER, BLADE	1	ASSISTANT SIDE

APK414-3 P22 370B
FRONT WINDOW WIPER (2)

FIG.374A

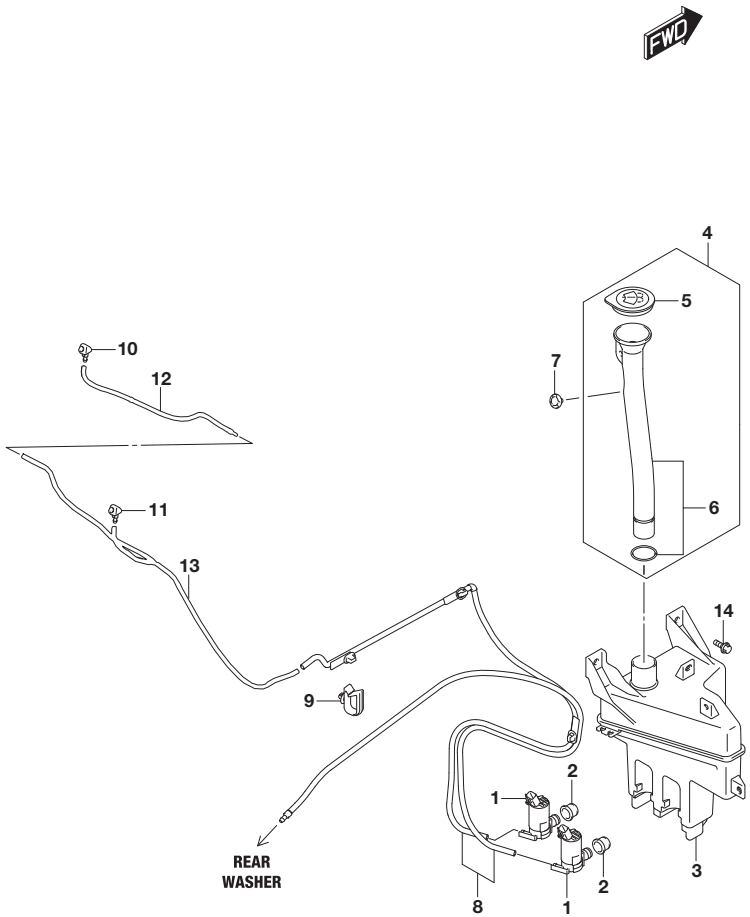

FIG.374A (2-K-7) WINDOW WASHER (K10C,K14C)

REF NO.	PART NO.	DESCRIPTION	Q'TY	REMARKS
1	38410-71L10	PUMP ASSY, WASHER	2	
2	38453-61L00	GROMMET	2	
3	38450-61M10	TANK, WASHER	1	
4	38402-54P00	INLET SET, WASHER WITH CAP	1	
5	38452-54P00	.CAP, WASHER TANK	1	
6	38453-54P00	.INLET	1	
7	09409-07340	CLIP (6.8X11.5)	1	
8	38459-54P00	HOSE SET	1	REAR WASHER TO WASHER PUMP ASSY
9-1	38496-61M00	CLAMP, WASHER HOSE	2	LHD:GLX
9-2	38496-61M00	CLAMP, WASHER HOSE	1	RHD:GLX
10-1	38480-54P00	NOZZLE, WASHER	1	LHD
10-2	38480-54P30	NOZZLE, WASHER	1	RHD
11-1	38480-54P10	NOZZLE, WASHER	1	LHD
11-2	38480-54P20	NOZZLE, WASHER	1	RHD
12-1	38832-54P00	HOSE ASSY, FR WASHER	1	LHD
12-2	38832-54P30	HOSE ASSY, FR WASHER	1	RHD
13-1	38832-54P10	HOSE ASSY, FR WASHER	1	LHD
13-2	38832-54P20	HOSE ASSY, FR WASHER	1	RHD
14	02162-0612A	SCREW	3	

FIG.374B

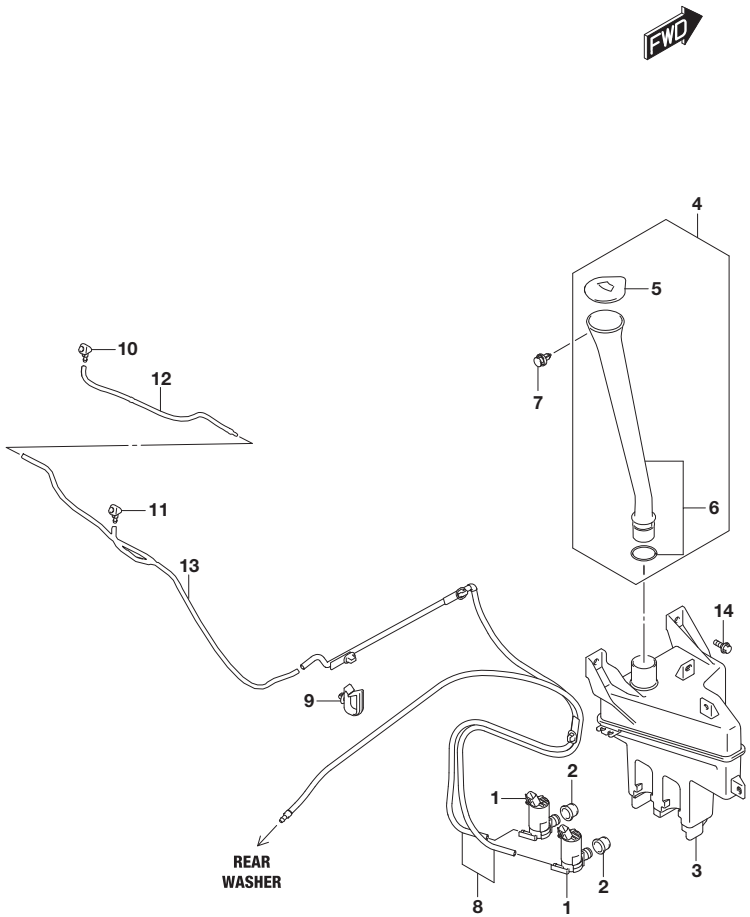

FIG.374B (2-K-8) WINDOW WASHER (K14D)

REF NO.	PART NO.	DESCRIPTION	Q'TY	REMARKS
1	38410-71L10	PUMP ASSY, WASHER	2	
2	38453-61L00	GROMMET	2	
3	38450-61M10	TANK, WASHER	1	
4	38402-74S00	INLET SET, WASHER WITH CAP	1	
5	38452-74S00	.CAP, WASHER TANK	1	
6	38453-74S00	.INLET	1	
7	09409-07340	CLIP (6.8X11.5)	1	
8	38459-54P00	HOSE SET	1	REAR WASHER TO WASHER PUMP ASSY
9-1	38496-61M00	CLAMP, WASHER HOSE	2	LHD:GLX
9-2	38496-61M00	CLAMP, WASHER HOSE	1	RHD:GLX
10-1	38480-54P00	NOZZLE, WASHER	1	LHD
10-2	38480-54P30	NOZZLE, WASHER	1	RHD
11-1	38480-54P10	NOZZLE, WASHER	1	LHD
11-2	38480-54P20	NOZZLE, WASHER	1	RHD
12-1	38832-54P00	HOSE ASSY, FR WASHER	1	LHD
12-2	38832-54P30	HOSE ASSY, FR WASHER	1	RHD
13-1	38832-54P10	HOSE ASSY, FR WASHER	1	LHD
13-2	38832-54P20	HOSE ASSY, FR WASHER	1	RHD
14	02162-0612A	SCREW	3	

FIG.376A

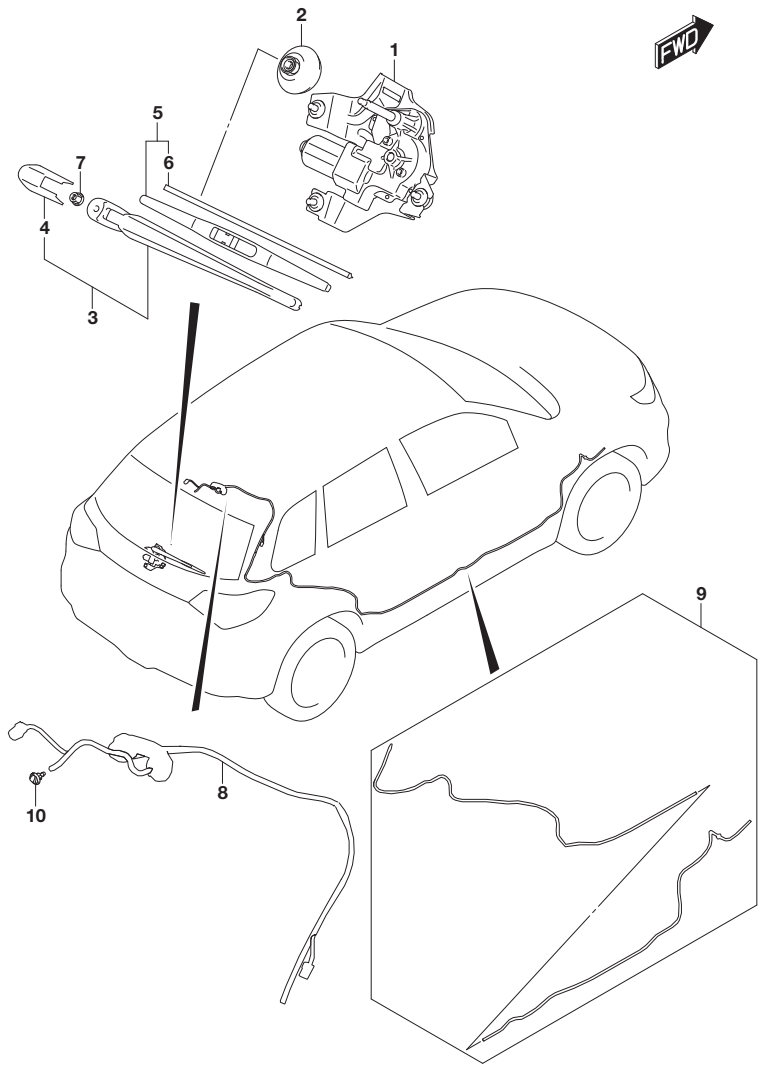

FIG.376A (2-K-9) REAR WINDOW WIPER

REF NO.	PART NO.	DESCRIPTION	Q'TY	REMARKS
1	38810-54P00	WIPER ASSY, RR WINDOW	1	
2	38274-54P00	CAP, WIPER PIVOT	1	
3	38821-54G10	ARM ASSY, RR WIPER	1	
4	38315-54G00	.COVER	1	
5	38340-63J00	BLADE ASSY, RR WIPER	1	
6	38346-63J00	.RUBBER, BLADE	1	
7	08316-1006A	NUT	1	
8	38834-54P00	HOSE ASSY, RR WASHER BACK DOOR	1	
9	38835-54P00	HOSE ASSY, RR WASHER FLOOR	1	
10	38840-62J00	NOZZLE ASSY, RR WASHER	1	

APK414-3 P22 376A
REAR WINDOW WIPER

FIG.392A

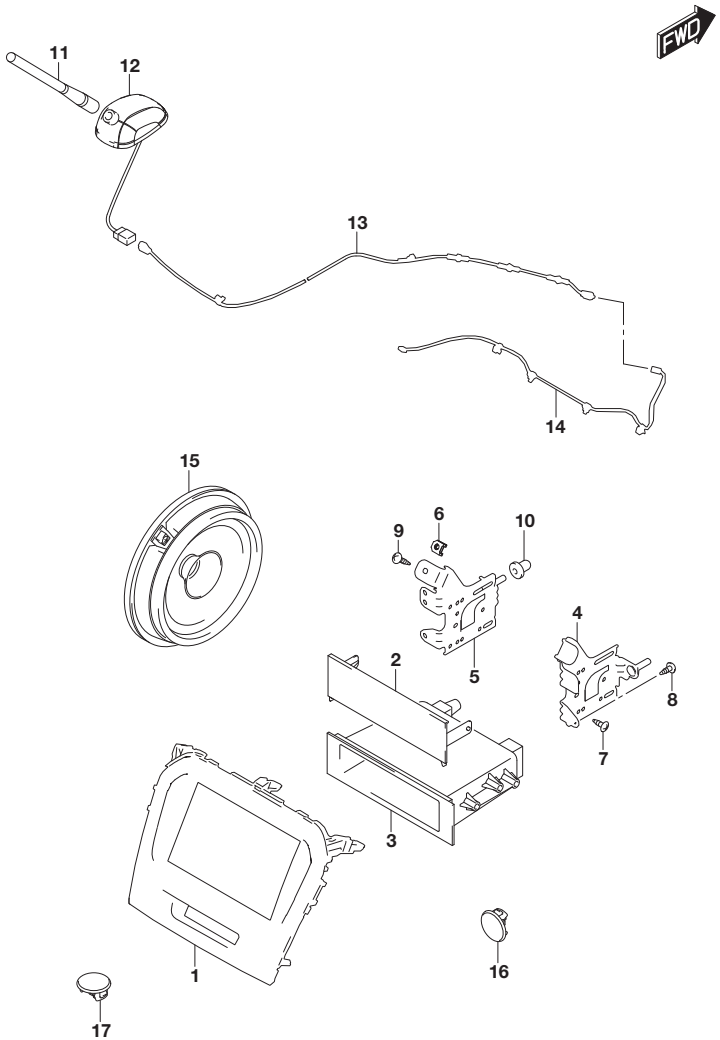

FIG.392A (2-K-10) AUDIO (N/TUNER)

REF NO.	PART NO.	DESCRIPTION	Q'TY	REMARKS
1	73821-54P00-5PK	GARNISH, I/P CENTER (BLACK)	1	
2	39161-80J00	COVER, RADIO HOLE	1	
3	39182-80J10	POCKET, TUNER	1	
4	39321-54P00	BRACKET, TUNER RH	1	
5	39322-54P00	BRACKET, TUNER LH	1	
6	09148-05045	NUT	2	
7	03241-0512A	SCREW	4	
8	03541-0516A	SCREW	4	
9	03541-0516A	SCREW	2	
10	34955-61M00	BUSH, TUNER BRACKET	2	
11	39251-68L00	ROD, ANTENNA	1	
12	39253-68L11	BASE, ANTENNA	1	
13-1	39271-54P00	FEEDER, ROOF	1	N/SUNROOF
13-2	39271-54P10	FEEDER, ROOF	1	W/SUNROOF
14-1	39270-54P00	FEEDER, I/P	1	LHD
14-2	39270-54P10	FEEDER, I/P	1	RHD
15	39102-86R00	SPEAKER ASSY	4	
16	37275-65H00	CAP	1	
17	37275-65H00	CAP	1	W/CONSOLE ARMREST

FIG.392B

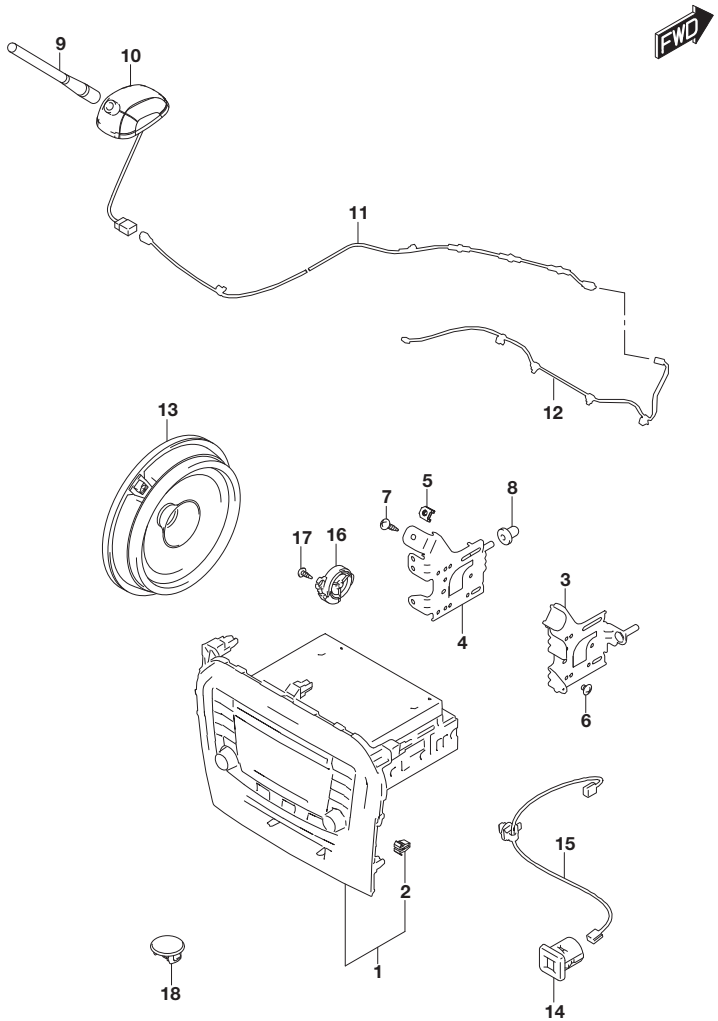

FIG.392B (2-K-11) AUDIO (W/TUNER:N/BACK CAMERA)

REF NO.	PART NO.	DESCRIPTION	Q'TY	REMARKS
1-1	39101-54P11-BKZ	TUNER ASSY (9KHZ) (BLACK/CHROME)	1	N/DAB
1-2	39101-54P20-BKZ	TUNER ASSY (9KHZ) (BLACK/CHROME)	1	W/DAB
2	09409-08342	.CLIP	5	
3	39321-54P00	BRACKET, TUNER RH	1	
4	39322-54P00	BRACKET, TUNER LH	1	
5	09148-05045	NUT	2	
6	02142-0508A	SCREW	6	
7	03541-0516A	SCREW	2	
8	34955-61M00	BUSH, TUNER BRACKET	2	
9-1	39251-68L00	ROD, ANTENNA	1	N/DAB
9-2	39251-68L10	ROD, ANTENNA	1	W/DAB
10-1	39253-68L11	BASE, ANTENNA	1	N/DAB
10-2	39253-68L21	BASE, ANTENNA	1	W/DAB
11-1	39271-54P00	FEEDER, ROOF	1	N/DAB:N/SUNROOF
11-2	39271-54P10	FEEDER, ROOF	1	N/DAB:W/SUNROOF
11-3	39271-54PA0	FEEDER, ROOF	1	W/DAB:N/SUNROOF
11-4	39271-54PB0	FEEDER, ROOF	1	W/DAB:W/SUNROOF
12-1	39270-54P00	FEEDER, I/P	1	LHD:N/DAB
12-2	39270-54PA0	FEEDER, I/P	1	LHD:W/DAB
12-3	39270-54P10	FEEDER, I/P	1	RHD:N/DAB
12-4	39270-54PB0	FEEDER, I/P	1	RHD:W/DAB
13	39102-86R00	SPEAKER ASSY	4	
14	39105-54P00	SOCKET, USB	1	
15	39106-54P00	CABLE, USB	1	
16	39102-61M00	SPEAKER ASSY, TWEETER	2	W/TWEETER
17	03541-0410A	SCREW	4	W/TWEETER
18	37275-65H00	CAP	1	

FIG.392C

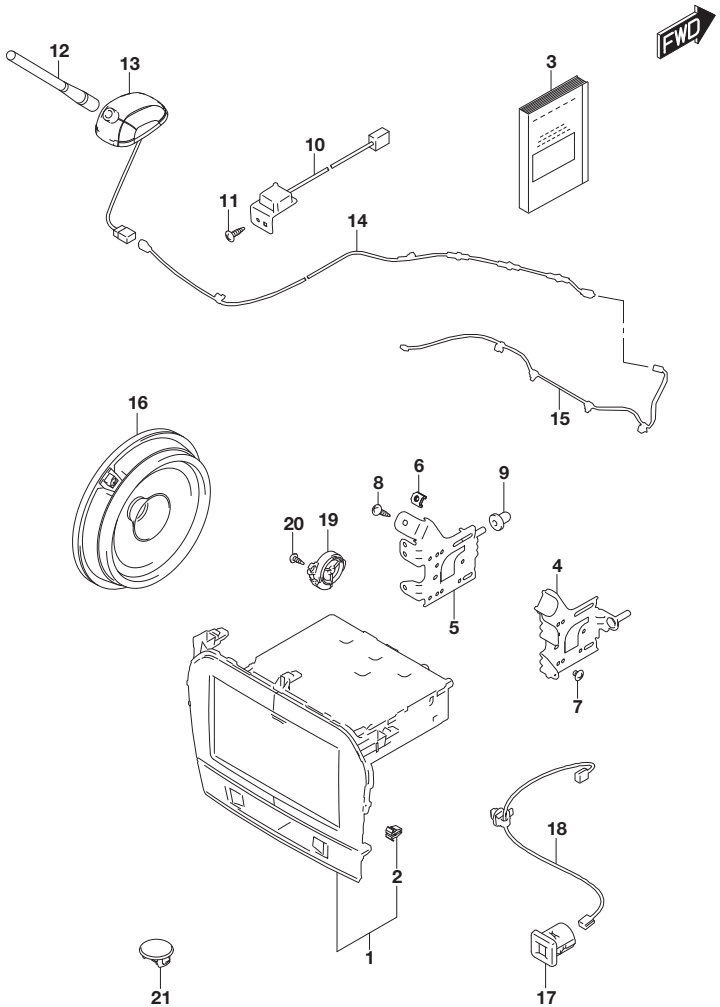

FIG.392C (2-K-12) AUDIO (W/TUNER:W/BACK CAMERA)

REF NO.	PART NO.	DESCRIPTION	Q'TY	REMARKS
1-1	39920-54P52-DB7	UNIT ASSY, NAVI (9KHZ) (BLACK/CHROME)	1	N/AEB CAMERA:N/DAB: N/NAVIGATION
1-2	39920-54PH4-DB7	UNIT ASSY, NAVI (9KHZ) (BLACK/CHROME)	1	N/AEB CAMERA:N/DAB: W/NAVIGATION
1-3	39920-54P42-DB7	UNIT ASSY, NAVI (9KHZ) (BLACK/CHROME)	1	N/AEB CAMERA:W/DAB: N/NAVIGATION
1-4	39920-54PG4-DB7	UNIT ASSY, NAVI (9KHZ) (BLACK/CHROME)	1	N/AEB CAMERA:W/DAB: W/NAVIGATION
1-5	39920-54P72-DB7	UNIT ASSY, NAVI (9KHZ) (BLACK/CHROME)	1	W/AEB MONAURAL CAMERA:N/DAB: N/NAVIGATION
1-6	39920-54PK4-DB7	UNIT ASSY, NAVI (9KHZ) (BLACK/CHROME)	1	W/AEB MONAURAL CAMERA:N/DAB: W/NAVIGATION
1-7	39920-54P62-DB7	UNIT ASSY, NAVI (9KHZ) (BLACK/CHROME)	1	W/AEB MONAURAL CAMERA:W/DAB: N/NAVIGATION
1-8	39920-54PJ4-DB7	UNIT ASSY, NAVI (9KHZ) (BLACK/CHROME)	1	W/AEB MONAURAL CAMERA:W/DAB: W/NAVIGATION
2	09409-08342	.CLIP	5	
3-1	39103-62MA1	MANUAL, NAVI	1	ENGLISH
3-2	39103-62MB1	MANUAL, NAVI	1	FRENCH
3-3	39103-62MC1	MANUAL, NAVI	1	SPANISH
3-4	39103-62MD1	MANUAL, NAVI	1	GERMAN
3-5	39103-62ME1	MANUAL, NAVI	1	ITALIAN
3-6	39103-62MF1	MANUAL, NAVI	1	DUTCH
3-7	39103-62MG1	MANUAL, NAVI	1	DANISH
3-8	39103-62MH1	MANUAL, NAVI	1	PORTUGUESE
3-9	39103-62MJ1	MANUAL, NAVI	1	GREEK
3-10	39103-62MK1	MANUAL, NAVI	1	FINNISH
3-11	39103-62ML1	MANUAL, NAVI	1	SWEDISH
3-12	39103-62MM1	MANUAL, NAVI	1	NORWEGIAN
3-13	39103-62MN1	MANUAL, NAVI	1	POLISH
3-14	39103-62MP1	MANUAL, NAVI	1	HUNGARIAN,CZECH,CROATIAN, SERBIAN,RUMANIAN,SLOVAK, SLOVENIAN
4	39321-54P00	BRACKET, TUNER RH	1	
5	39322-54P00	BRACKET, TUNER LH	1	
6	09148-05045	NUT	2	

FIG.392C

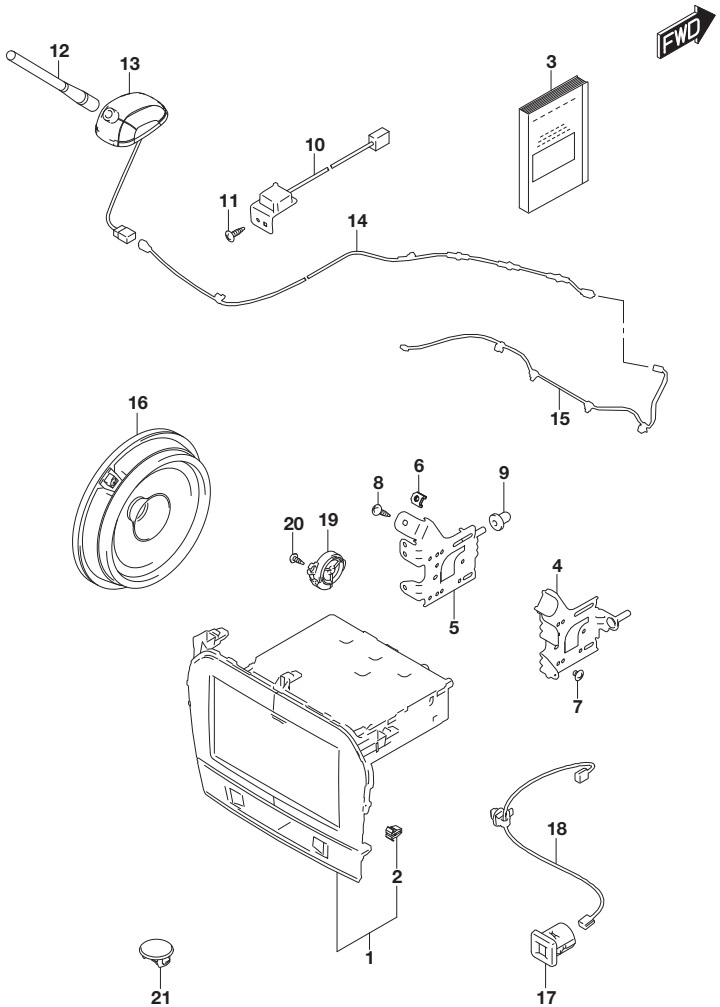

FIG.392C (2-K-13) AUDIO (W/TUNER:W/BACK CAMERA)

REF NO.	PART NO.	DESCRIPTION	Q'TY	REMARKS
7	02142-0508A	SCREW	4	
8	03541-0516A	SCREW	2	
9	34955-61M00	BUSH, TUNER BRACKET	2	
10	39950-54P00	ANTENNA ASSY, GPS	1	
11	03541-0516A	SCREW	1	
12-1	39251-68L00	ROD, ANTENNA	1	N/DAB
12-2	39251-68L10	ROD, ANTENNA	1	W/DAB
13-1	39253-68L11	BASE, ANTENNA	1	N/DAB
13-2	39253-68L21	BASE, ANTENNA	1	W/DAB
14-1	39271-54P00	FEEDER, ROOF	1	N/DAB:N/SUNROOF
14-2	39271-54P10	FEEDER, ROOF	1	N/DAB:W/SUNROOF
14-3	39271-54PA0	FEEDER, ROOF	1	W/DAB:N/SUNROOF
14-4	39271-54PB0	FEEDER, ROOF	1	W/DAB:W/SUNROOF
15-1	39270-54P00	FEEDER, I/P	1	LHD:N/DAB
15-2	39270-54PA0	FEEDER, I/P	1	LHD:W/DAB
15-3	39270-54P10	FEEDER, I/P	1	RHD:N/DAB
15-4	39270-54PB0	FEEDER, I/P	1	RHD:W/DAB
16	39102-86R00	SPEAKER ASSY	4	
17	39105-54P00	SOCKET, USB	1	
18	39106-54P00	CABLE, USB	1	
19	39102-61M00	SPEAKER ASSY, TWEETER	2	W/TWEETER
20	03541-0410A	SCREW	4	W/TWEETER
21	37275-65H00	CAP	1	

FIG.400A

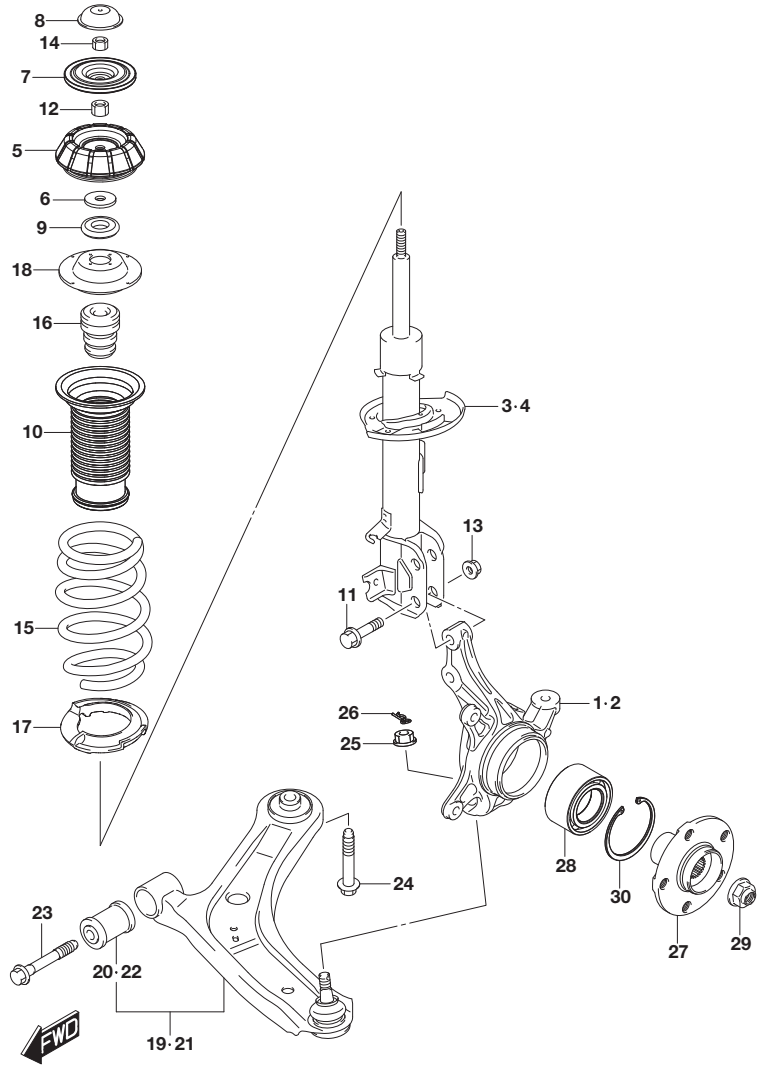

FIG.400A (2-K-14) FRONT SUSPENSION

REF NO.	PART NO.	DESCRIPTION	Q'TY	REMARKS
1	45111-61M00	KNUCKLE, STRG RH	1	
2	45151-61M00	KNUCKLE, STRG LH	1	
3	41601-54PA0	STRUT ASSY, FR SPNSN RH	1	
4	41602-54PA0	STRUT ASSY, FR SPNSN LH	1	
5	41710-61M00	SUPPORT, FR STRUT	2	
6	41711-61M00	PLATE, STRUT BEARING	2	
7	41720-79J11	STOPPER, FR STRUT REBOUND	2	
8	41724-68L01	CAP, STRUT ROD	2	
9	41742-61M00	BEARING, FR STRUT	2	
10	41931-61M01	COVER, STRUT DUST	2	
11	09103-14032	BOLT (14X54)	4	
12	09140-12050	NUT	2	
13	09159-14031	NUT	4	
14	08310-0012A	NUT	2	
15-1	41111-54P00	SPRING, FR COIL	2	(K10C,K14C):2WD
15-2	41111-54P10	SPRING, FR COIL	2	(K10C,K14C):4WD
15-3	41111-74S00	SPRING, FR COIL	2	K14D
16	42111-61M00	STOPPER, FR BUMP	2	
17	41212-61M00	SEAT, FR SPRING LWR	2	
18	41230-61M00	SEAT, FR SPRING UPR	2	
19	45201-61M00	ARM ASSY, FR SPNSN RH	1	
20	45530-71L00	.BUSHING, SPNSN ARM FR	1	
21	45202-61M00	ARM ASSY, FR SPNSN LH	1	
22	45530-71L00	.BUSHING, SPNSN ARM FR	1	
23	45264-61M00	BOLT, SPNSN ARM FR BUSHING	2	
24	09135-14018	BOLT (14X85)	2	
25	09159-14033	NUT	2	
26	09385-14001	PIN	2	
27	43421-79J10	HUB, FR WHEEL	2	
28	43440-61M00	BEARING, FR WHEEL	2	
29	43459-65J00	NUT, FR AXLE	2	
30	09381-84004	CIRCLIP	2	

FIG.408A

FIG.408A (2-L-2) FRONT STABILIZER (K10C,K14C)

REF NO.	PART NO.	DESCRIPTION	Q'TY	REMARKS
1	42311-61M00	BAR, FR STABILIZER	1	
2	42420-77M01	JOINT, STABILIZER BAR	2	
3	42431-54P00	MOUNT, STABILIZER BAR	2	
4	42441-61M00	BRACKET, STABILIZER MOUNT	2	
5	09117-08101	BOLT (8X25)	4	
6	08316-1010A	NUT	4	

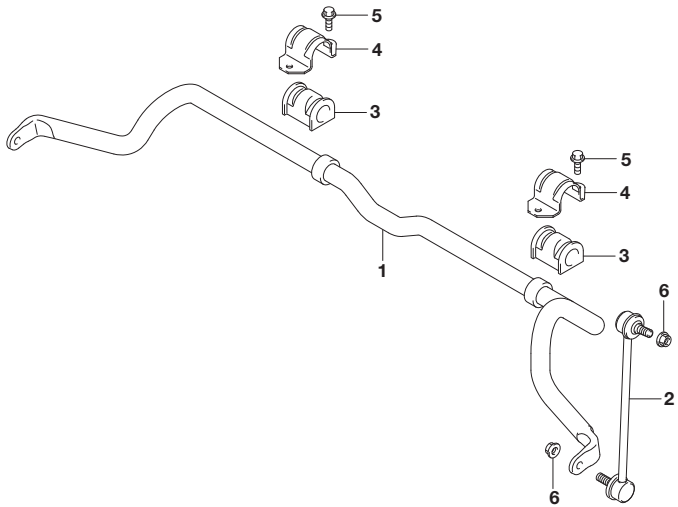

APK414-3 P22 408A
FRONT STABILIZER (1)

FIG.408B

FIG.408B (2-L-3) FRONT STABILIZER (K14D)

REF NO.	PART NO.	DESCRIPTION	Q'TY	REMARKS
1	42311-61M00	BAR, FR STABILIZER	1	
2	42420-77M01	JOINT, STABILIZER BAR	2	
3	42431-54P00	MOUNT, STABILIZER BAR	2	
4	42441-61M00	BRACKET, STABILIZER MOUNT	1	
5	42441-74S00	BRACKET, STABILIZER MOUNT	1	
6	09117-08101	BOLT (8X25)	4	
7	08316-1010A	NUT	4	

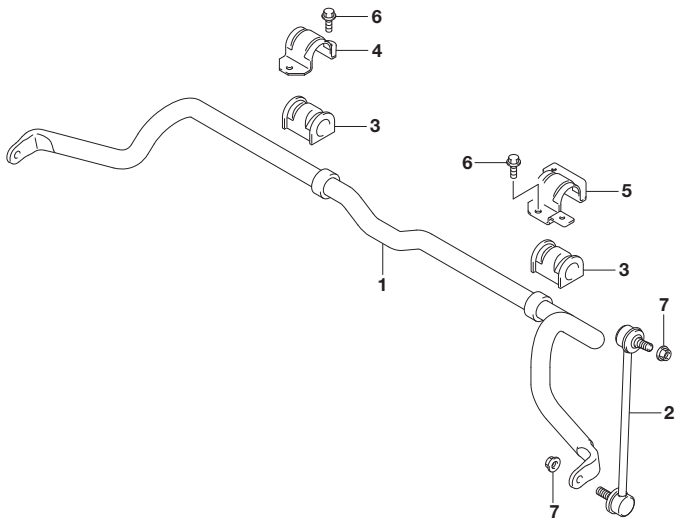

APK414-3 P22 408B
FRONT STABILIZER (2)

FIG.410A

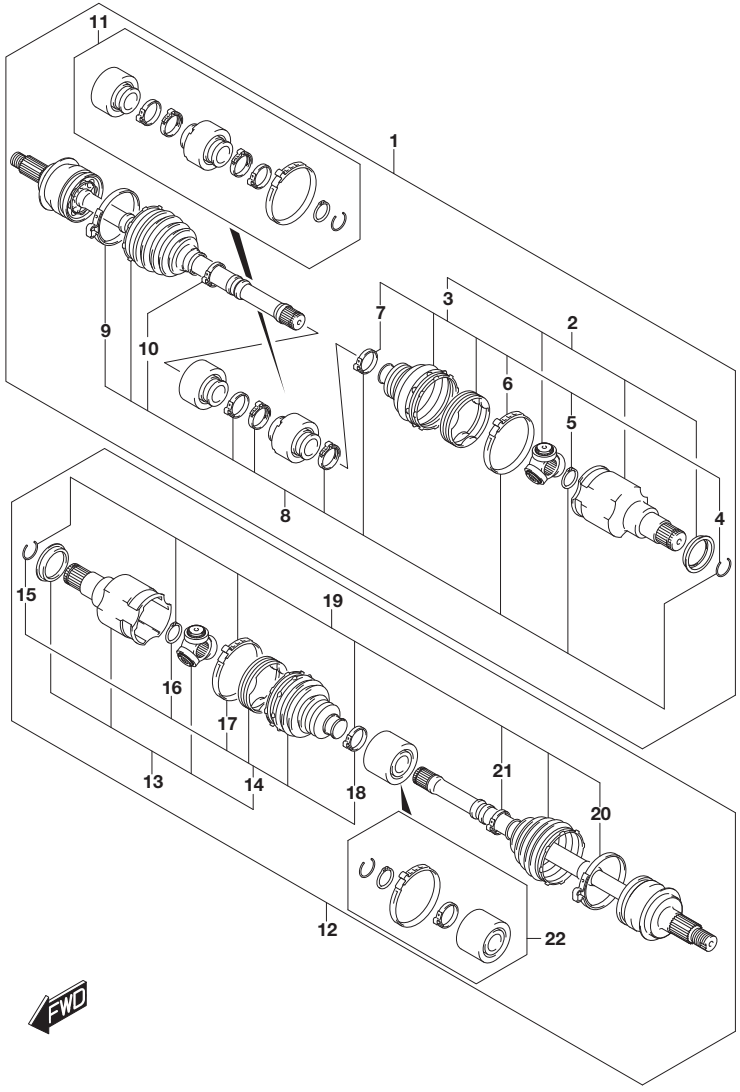

FIG.410A (2-L-4) FRONT DRIVE SHAFT (2WD:5MT)

REF NO.	PART NO.	DESCRIPTION	Q'TY	REMARKS
1	44101-64R21	SHAFT ASSY, FR DRIVE RH	1	
2	44117-64R20	.JOINT ASSY, DIFF SIDE	1	
3	44119-54P50	..BOOT SET, DIFF SIDE	1	
4	44111-54P50	...SHANK CIRCLIP	1	
5	44112-54PD0	...CIRCLIP	1	
6	44121-54P50	...BIG CLAMP	1	
7	44123-54P50	...SMALL CLAMP	1	
8	44118-54P50	.BOOT SET, WHEEL SIDE	1	
9	44122-54PD0	..BIG CLAMP	1	
10	44124-54PD0	..SMALL CLAMP	1	
11	44125-54P50	.DAMPER SET	1	
12	44102-54P51	SHAFT ASSY, FR DRIVE LH	1	
13	44117-54P50	.JOINT ASSY, DIFF SIDE	1	
14	44119-54P50	..BOOT SET, DIFF SIDE	1	
15	44111-54P50	...SHANK CIRCLIP	1	
16	44112-54PD0	...CIRCLIP	1	
17	44121-54P50	...BIG CLAMP	1	
18	44123-54P50	...SMALL CLAMP	1	
19	44120-54P50	.BOOT SET, WHEEL SIDE	1	
20	44122-54PD0	..BIG CLAMP	1	
21	44124-54PD0	..SMALL CLAMP	1	
22	44126-54P50	.DAMPER SET	1	

FIG.410B(2-L-5) FRONT DRIVE SHAFT (2WD:6MT)
FIG.410C(2-L-6) FRONT DRIVE SHAFT (2WD:6AT:K10C)
FIG.410D(2-L-7) FRONT DRIVE SHAFT (2WD:6AT:K14C)
FIG.410E(2-L-8) FRONT DRIVE SHAFT (4WD:(5MT,6MT))
FIG.410F(2-L-9) FRONT DRIVE SHAFT (4WD:6AT:K10C)
FIG.410G(2-L-10) FRONT DRIVE SHAFT (4WD:6AT:K14C)

FIG.410B

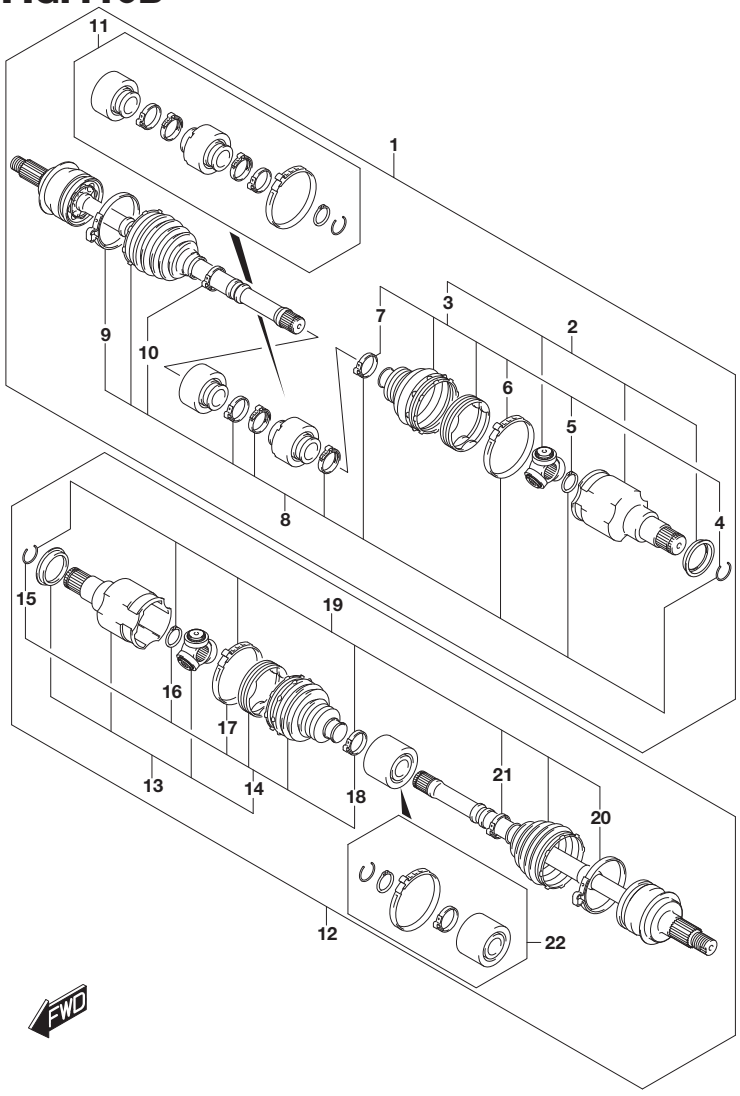

FIG.410B (2-L-5) FRONT DRIVE SHAFT (2WD:6MT)

REF NO.	PART NO.	DESCRIPTION	Q'TY	REMARKS
1	44101-54P53	SHAFT ASSY, FR DRIVE RH	1	
2	44117-54P50	.JOINT ASSY, DIFF SIDE	1	
3	44119-54P50	..BOOT SET, DIFF SIDE	1	
4	44111-54P50	...SHANK CIRCLIP	1	
5	44112-54PD0	...CIRCLIP	1	
6	44121-54P50	...BIG CLAMP	1	
7	44123-54P50	...SMALL CLAMP	1	
8	44118-54P50	.BOOT SET, WHEEL SIDE	1	
9	44122-54PD0	..BIG CLAMP	1	
10	44124-54PD0	..SMALL CLAMP	1	
11	44125-54P50	.DAMPER SET	1	
12	44102-54P51	SHAFT ASSY, FR DRIVE LH	1	
13	44117-54P50	.JOINT ASSY, DIFF SIDE	1	
14	44119-54P50	..BOOT SET, DIFF SIDE	1	
15	44111-54P50	...SHANK CIRCLIP	1	
16	44112-54PD0	...CIRCLIP	1	
17	44121-54P50	...BIG CLAMP	1	
18	44123-54P50	...SMALL CLAMP	1	
19	44120-54P50	.BOOT SET, WHEEL SIDE	1	
20	44122-54PD0	..BIG CLAMP	1	
21	44124-54PD0	..SMALL CLAMP	1	
22	44126-54P50	.DAMPER SET	1	

FIG.410C

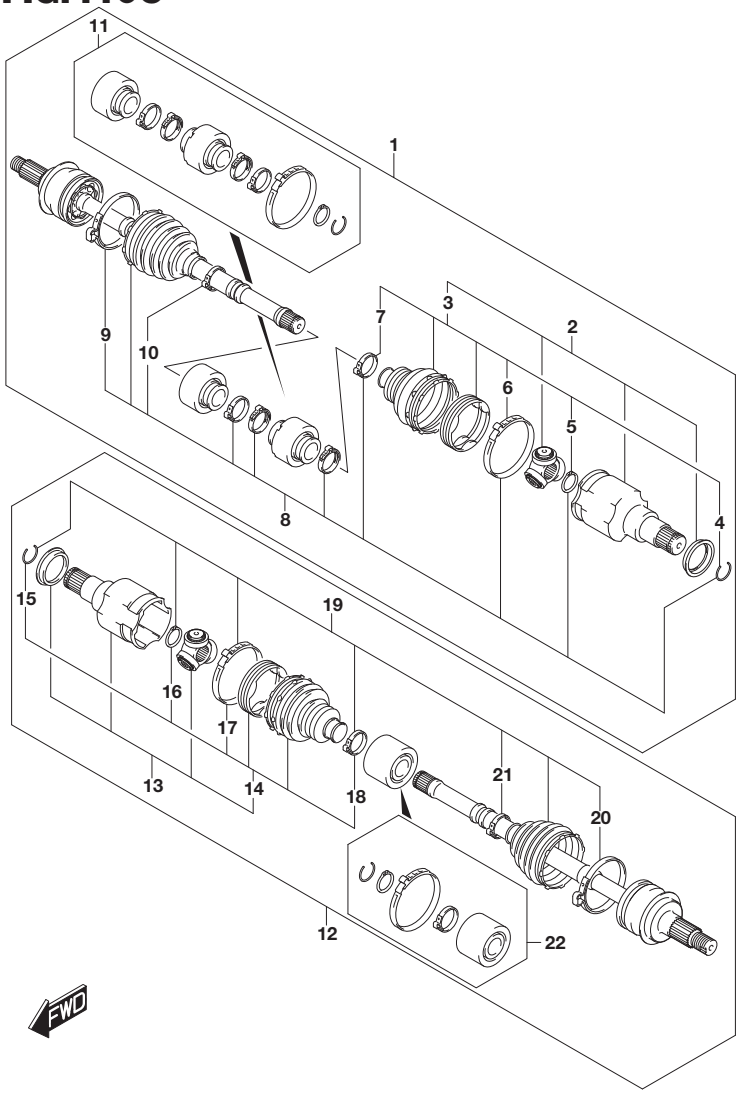

FIG.410C (2-L-6) FRONT DRIVE SHAFT (2WD:6AT:K10C)

REF NO.	PART NO.	DESCRIPTION	Q'TY	REMARKS
1	44101-54P63	SHAFT ASSY, FR DRIVE RH	1	
2	44117-54P60	.JOINT ASSY, DIFF SIDE	1	
3	44119-54P60	..BOOT SET, DIFF SIDE	1	
4	44111-54P10	...SHANK CIRCLIP	1	
5	44113-54P60	...CIRCLIP	1	
6	44121-54P60	...BIG CLAMP	1	
7	44124-54PD0	...SMALL CLAMP	1	
8	44118-54P60	.BOOT SET, WHEEL SIDE	1	
9	44122-54PD0	..BIG CLAMP	1	
10	44124-54PD0	..SMALL CLAMP	1	
11	44125-54P60	.DAMPER SET	1	
12	44102-64R10	SHAFT ASSY, FR DRIVE LH	1	
13	44117-54P60	.JOINT ASSY, DIFF SIDE	1	
14	44119-54P60	..BOOT SET, DIFF SIDE	1	
15	44111-54P10	...SHANK CIRCLIP	1	
16	44113-54P60	...CIRCLIP	1	
17	44121-54P60	...BIG CLAMP	1	
18	44124-54PD0	...SMALL CLAMP	1	
19	44120-64R10	.BOOT SET, WHEEL SIDE	1	
20	44122-54PD0	..BIG CLAMP	1	
21	44124-54PD0	..SMALL CLAMP	1	
22	44126-64R10	.DAMPER SET	1	

FIG.410D

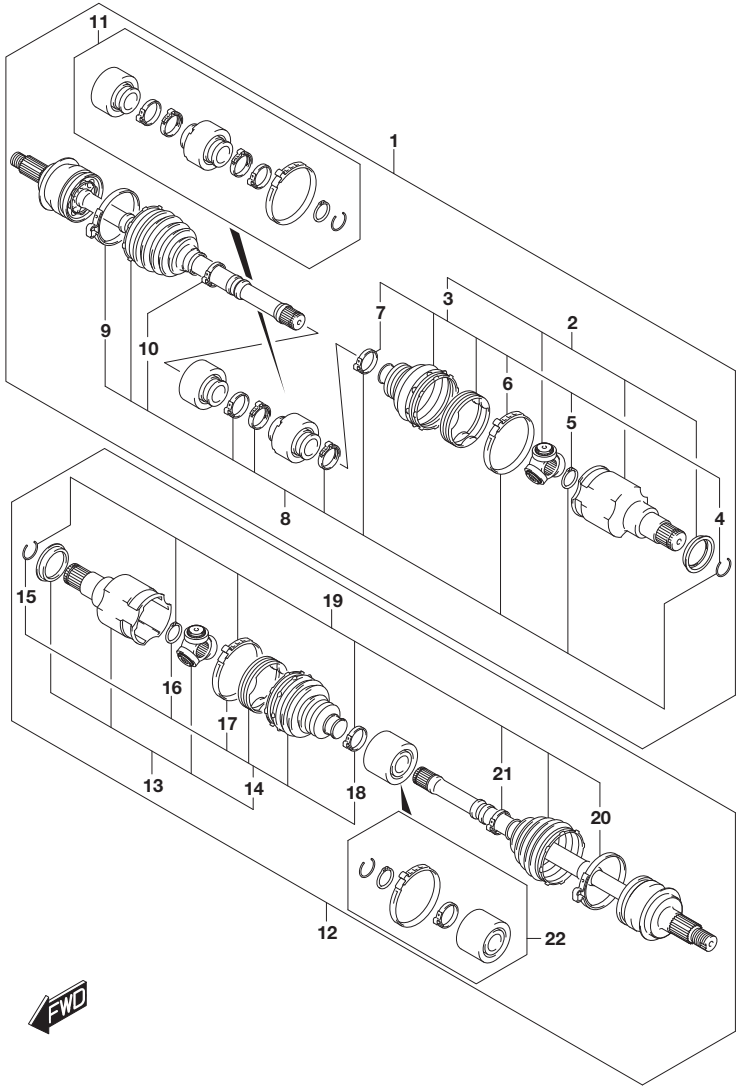

FIG.410D (2-L-7) FRONT DRIVE SHAFT (2WD:6AT:K14C)

REF NO.	PART NO.	DESCRIPTION	Q'TY	REMARKS
1	44101-54P63	SHAFT ASSY, FR DRIVE RH	1	
2	44117-54P60	.JOINT ASSY, DIFF SIDE	1	
3	44119-54P60	..BOOT SET, DIFF SIDE	1	
4	44111-54P10	...SHANK CIRCLIP	1	
5	44113-54P60	...CIRCLIP	1	
6	44121-54P60	...BIG CLAMP	1	
7	44124-54PD0	...SMALL CLAMP	1	
8	44118-54P60	.BOOT SET, WHEEL SIDE	1	
9	44122-54PD0	..BIG CLAMP	1	
10	44124-54PD0	..SMALL CLAMP	1	
11	44125-54P60	.DAMPER SET	1	
12	44102-54P61	SHAFT ASSY, FR DRIVE LH	1	
13	44128-54P61	.JOINT ASSY, DIFF SIDE	1	
14	44127-54P61	..BOOT SET, DIFF SIDE	1	
15	44111-54P10	...SHANK CIRCLIP	1	
16	44112-54PD0	...CIRCLIP	1	
17	44129-54P60	...BIG CLAMP	1	
18	44124-54PD0	...SMALL CLAMP	1	
19	44120-54P61	.BOOT SET, WHEEL SIDE	1	
20	44122-54PD0	..BIG CLAMP	1	
21	44124-54PD0	..SMALL CLAMP	1	
22	44126-54P61	.DAMPER SET	1	

FIG.410E

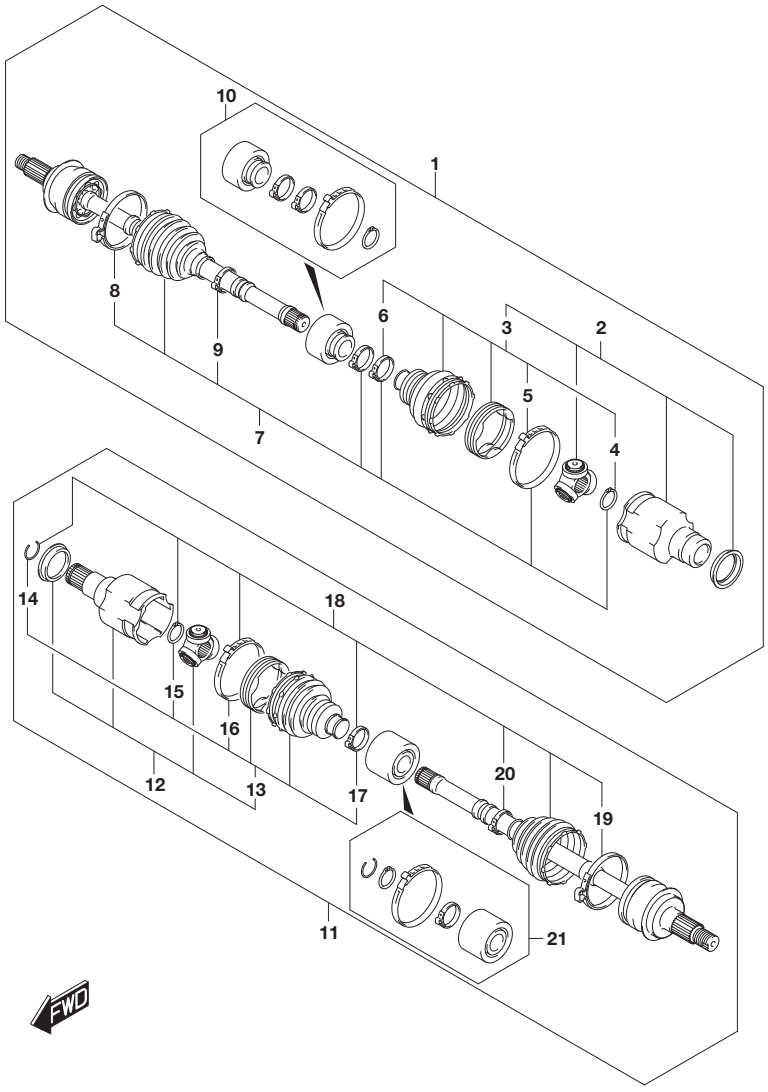

FIG.410E (2-L-8) FRONT DRIVE SHAFT (4WD:(5MT,6MT))

REF NO.	PART NO.	DESCRIPTION	Q'TY	REMARKS
1	44101-54PE1	SHAFT ASSY, FR DRIVE RH	1	
2	44117-54PE0	.JOINT ASSY, DIFF SIDE	1	
3	44119-54PE0	..BOOT SET, DIFF SIDE	1	
4	44112-54PD0	...CIRCLIP	1	
5	44121-54P50	...BIG CLAMP	1	
6	44123-54P50	...SMALL CLAMP	1	
7	44118-54PE0	.BOOT SET, WHEEL SIDE	1	
8	44122-54PD0	..BIG CLAMP	1	
9	44124-54PD0	..SMALL CLAMP	1	
10	44125-54PE0	.DAMPER SET	1	
11	44102-54P51	SHAFT ASSY, FR DRIVE LH	1	
12	44117-54P50	.JOINT ASSY, DIFF SIDE	1	
13	44119-54P50	..BOOT SET, DIFF SIDE	1	
14	44111-54P50	...SHANK CIRCLIP	1	
15	44112-54PD0	...CIRCLIP	1	
16	44121-54P50	...BIG CLAMP	1	
17	44123-54P50	...SMALL CLAMP	1	
18	44120-54P50	.BOOT SET, WHEEL SIDE	1	
19	44122-54PD0	..BIG CLAMP	1	
20	44124-54PD0	..SMALL CLAMP	1	
21	44126-54P50	.DAMPER SET	1	

FIG.410F

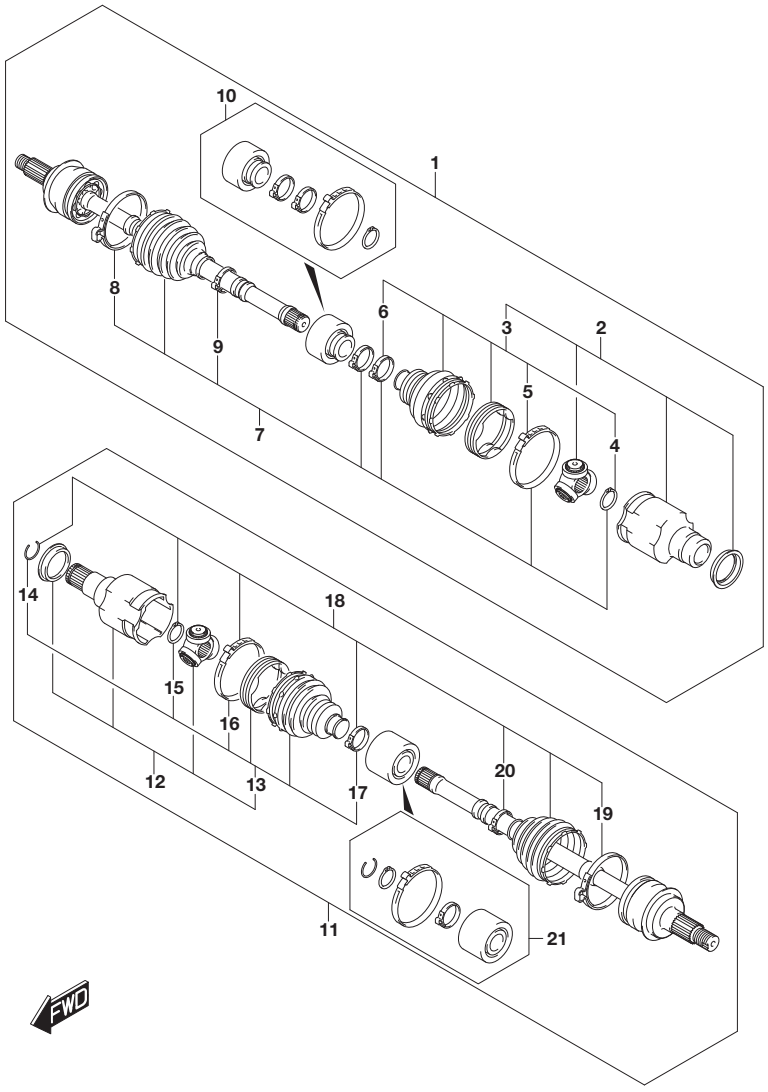

FIG.410F (2-L-9) FRONT DRIVE SHAFT (4WD:6AT:K10C)

REF NO.	PART NO.	DESCRIPTION	Q'TY	REMARKS
1	44101-64RB0	SHAFT ASSY, FR DRIVE RH	1	
2	44117-54PF1	.JOINT ASSY, DIFF SIDE	1	
3	44119-54PF1	..BOOT SET, DIFF SIDE	1	
4	44113-54P60	...CIRCLIP	1	
5	44121-54P60	...BIG CLAMP	1	
6	44124-54PD0	...SMALL CLAMP	1	
7	44118-54PF1	.BOOT SET, WHEEL SIDE	1	
8	44122-54PD0	..BIG CLAMP	1	
9	44124-54PD0	..SMALL CLAMP	1	
10	44125-54PF1	.DAMPER SET	1	
11	44102-64R10	SHAFT ASSY, FR DRIVE LH	1	
12	44117-54P60	.JOINT ASSY, DIFF SIDE	1	
13	44119-54P60	..BOOT SET, DIFF SIDE	1	
14	44111-54P10	...SHANK CIRCLIP	1	
15	44113-54P60	...CIRCLIP	1	
16	44121-54P60	...BIG CLAMP	1	
17	44124-54PD0	...SMALL CLAMP	1	
18	44120-64R10	.BOOT SET, WHEEL SIDE	1	
19	44122-54PD0	..BIG CLAMP	1	
20	44124-54PD0	..SMALL CLAMP	1	
21	44126-64R10	.DAMPER SET	1	

FIG.410G

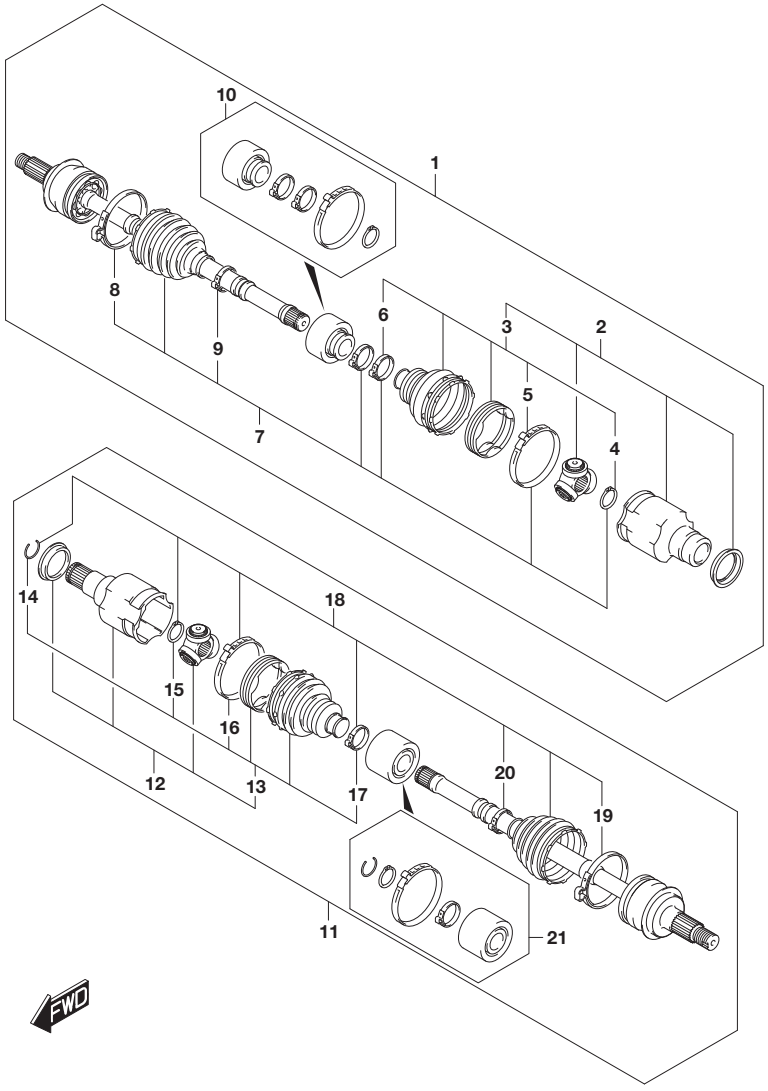

FIG.410G (2-L-10) FRONT DRIVE SHAFT (4WD:6AT:K14C)

REF NO.	PART NO.	DESCRIPTION	Q'TY	REMARKS
1	44101-54PF1	SHAFT ASSY, FR DRIVE RH	1	
2	44117-54PF1	.JOINT ASSY, DIFF SIDE	1	
3	44119-54PF1	..BOOT SET, DIFF SIDE	1	
4	44113-54P60	...CIRCLIP	1	
5	44121-54P60	...BIG CLAMP	1	
6	44124-54PD0	...SMALL CLAMP	1	
7	44118-54PF1	.BOOT SET, WHEEL SIDE	1	
8	44122-54PD0	..BIG CLAMP	1	
9	44124-54PD0	..SMALL CLAMP	1	
10	44125-54PF1	.DAMPER SET	1	
11	44102-54P61	SHAFT ASSY, FR DRIVE LH	1	
12	44128-54P61	.JOINT ASSY, DIFF SIDE	1	
13	44127-54P61	..BOOT SET, DIFF SIDE	1	
14	44111-54P10	...SHANK CIRCLIP	1	
15	44112-54PD0	...CIRCLIP	1	
16	44129-54P60	...BIG CLAMP	1	
17	44124-54PD0	...SMALL CLAMP	1	
18	44120-54P61	.BOOT SET, WHEEL SIDE	1	
19	44122-54PD0	..BIG CLAMP	1	
20	44124-54PD0	..SMALL CLAMP	1	
21	44126-54P61	.DAMPER SET	1	

FIG.418A

FIG.418A (2-L-11) FRONT SUSPENSION FRAME

REF NO.	PART NO.	DESCRIPTION	Q'TY	REMARKS
1	45810-61M01	FRAME, FR SPNSN	1	
2	45849-54P00	BOLT, FR SPNSN FRAME	2	
3	45849-54P00	BOLT, FR SPNSN FRAME	2	
4	45851-61M00	COVER, TORQUE ROD	1	
5	09409-06322	CLIP	2	

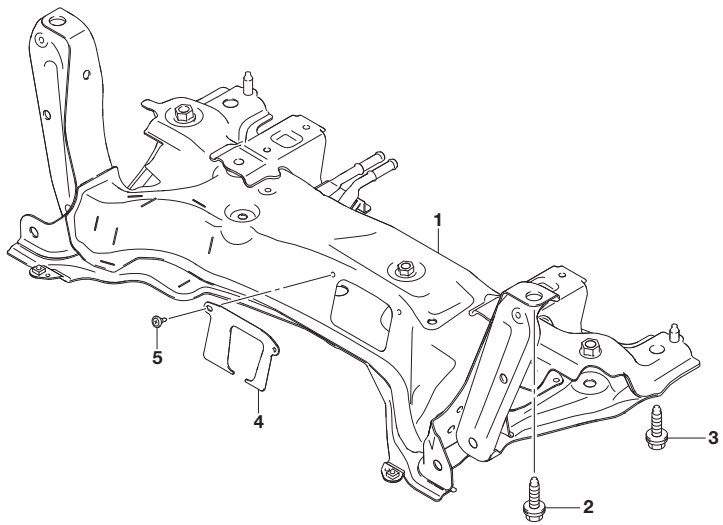

FIG.430A

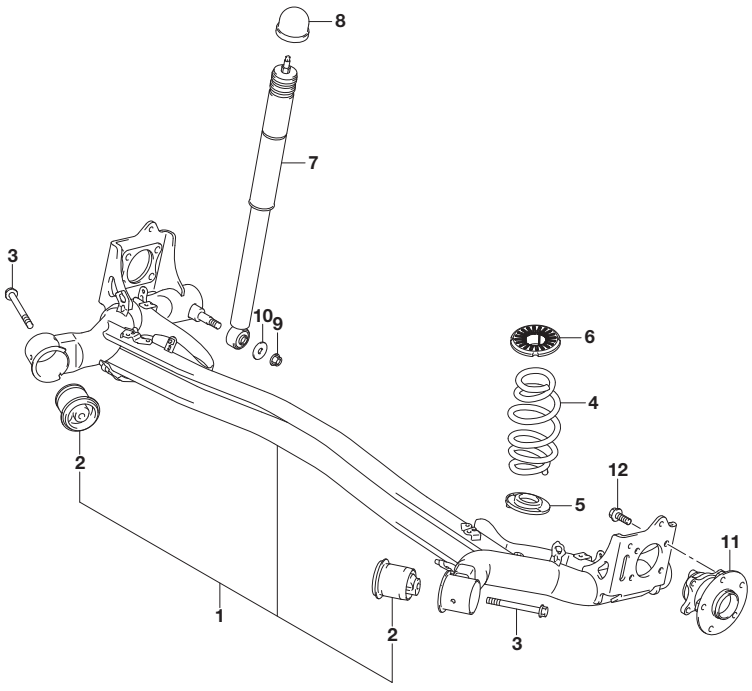

FIG.430A (2-L-12) REAR SUSPENSION (2WD)

REF NO.	PART NO.	DESCRIPTION	Q'TY	REMARKS
1	46500-61MA0	BEAM ASSY, RR SPNSN	1	
2	46221-61M10	.BUSHING, TRAILING ARM	2	
3	09135-12020	BOLT (12X113)	2	
4	41311-54P00	SPRING, RR COIL	2	
5	41312-70L00	SEAT, RR SPRING RUBBER LWR	2	
6	41341-79J00	SEAT, RR SPRING UPR	2	
7	41800-54PA0	ABSORBER ASSY, RR SHOCK	2	
8	41951-61M00	CAP, RR SHOCK ABSORBER	2	
9	46291-68H00	NUT, TRAILING ARM	2	
10	09160-12109	WASHER (12.5X38X3.2)	2	
11	43402-79J10	HUB ASSY, WHEEL	2	
12	09103-12080	BOLT (12X30)	8	

FIG.430B

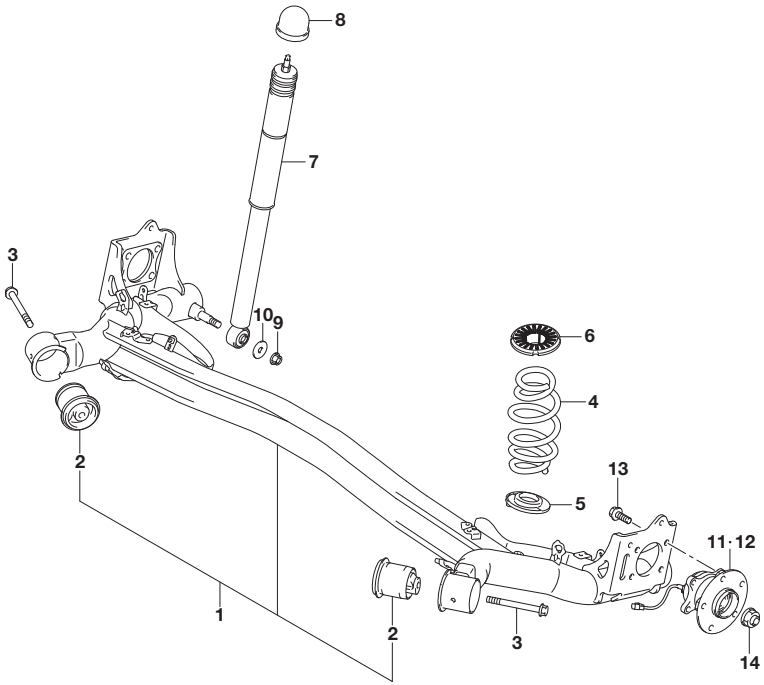

FIG.430B (2-L-13) REAR SUSPENSION (4WD)

REF NO.	PART NO.	DESCRIPTION	Q'TY	REMARKS
1	46500-61MA0	BEAM ASSY, RR SPNSN	1	
2	46221-61M10	.BUSHING, TRAILING ARM	2	
3	09135-12020	BOLT (12X113)	2	
4	41311-54P50	SPRING, RR COIL	2	
5	41312-70L00	SEAT, RR SPRING RUBBER LWR	2	
6	41341-79J00	SEAT, RR SPRING UPR	2	
7	41800-54PA0	ABSORBER ASSY, RR SHOCK	2	
8	41951-61M00	CAP, RR SHOCK ABSORBER	2	
9	46291-68H00	NUT, TRAILING ARM	2	
10	09160-12109	WASHER (12.5X38X3.2)	2	
11	43402-61MS0	HUB ASSY, RR WHEEL RH	1	
12	43402-61MM0	HUB ASSY, RR WHEEL LH	1	
13	09103-12080	BOLT (12X30)	8	
14	09159-18026	NUT	2	

FIG.443A

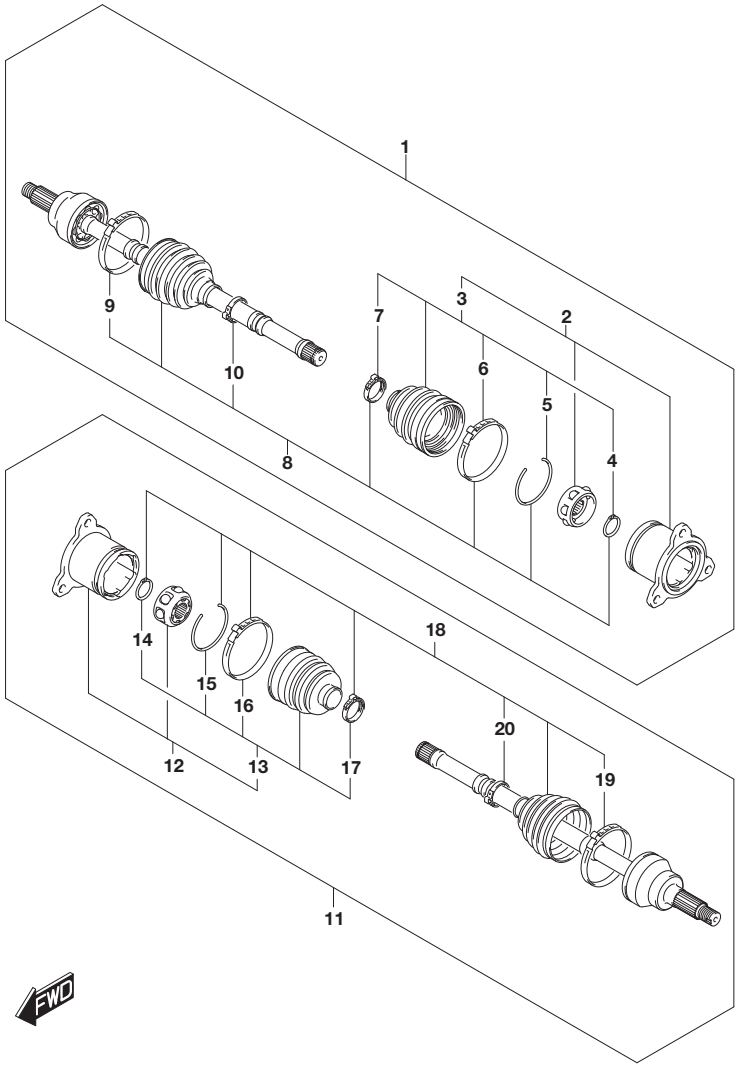

FIG.443A (2-L-14) REAR DRIVE SHAFT (4WD)

REF NO.	PART NO.	DESCRIPTION	Q'TY	REMARKS
1	44105-61M00	SHAFT ASSY, RR DRIVE RH	1	
2	44117-61M51	.JOINT ASSY, DIFF SIDE	1	
3	44119-61M51	..BOOT SET, DIFF SIDE	1	
4	44111-71C20	...RING, SNAP	1	
5	44112-68H00	...CIRCLIP	1	
6	44121-79JA0	...CLAMP, BOOT	1	
7	44123-79JA0	...BAND, BOOT SMALL	1	
8	44118-61M51	.BOOT SET, WHEEL SIDE	1	
9	44122-67LJ0	..BAND, BOOT	1	
10	44124-79JA0	..BAND, BOOT SMALL	1	
11	44106-61M00	SHAFT ASSY, RR DRIVE LH	1	
12	44117-61M51	.JOINT ASSY, DIFF SIDE	1	
13	44119-61M51	..BOOT SET, DIFF SIDE	1	
14	44111-71C20	...RING, SNAP	1	
15	44112-68H00	...CIRCLIP	1	
16	44121-79JA0	...CLAMP, BOOT	1	
17	44123-79JA0	...BAND, BOOT SMALL	1	
18	44118-61M51	.BOOT SET, WHEEL SIDE	1	
19	44122-67LJ0	..BAND, BOOT	1	
20	44124-79JA0	..BAND, BOOT SMALL	1	

FIG.449A

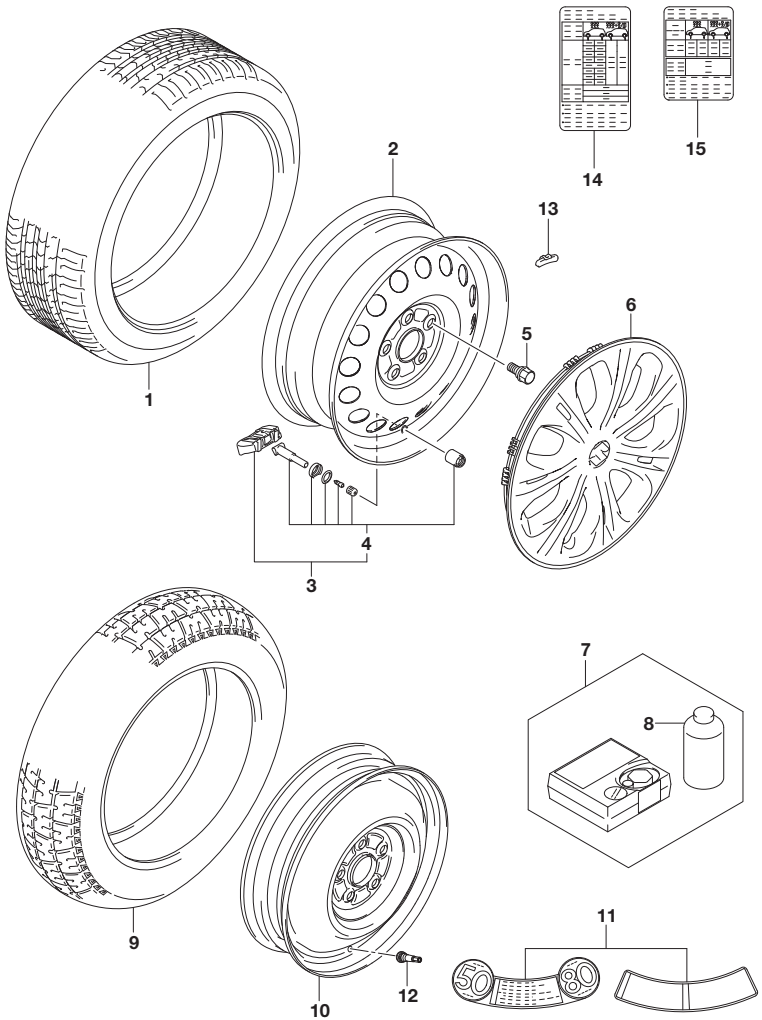

FIG.449A (3-B-2) ROAD WHEEL/TIRE (W/16 INCH TIRE:W/STEEL WHEEL)

REF NO.	PART NO.	DESCRIPTION	Q'TY	REMARKS
1	43110-54P20	TIRE (215/60R16 95H) (CONTINENTAL)	4	
2	43210-54P00-09L	WHEEL (16X6,1/2J) (BLACK)	4	
3	43139-61M00	VALVE SET, TPMS	4	
4	43138-61M00	.SEAL SET, TPMS	4	
5	43423-86G01	BOLT, WHEEL	20	
6	43250-54P00-27N	CAP ASSY, WHEEL FULL (SILVER)	4	
7-1	43310-61M00	REPAIR KIT, TIRE	1	K10C:N/SPARE TIRE
7-2	43310-74S00	REPAIR KIT, TIRE	1	K14D:N/SPARE TIRE
8-1	43312-61M00	.SEALANT, TIRE REPAIR	1	K10C:N/SPARE TIRE
8-2	43312-74S00	.SEALANT, TIRE REPAIR	1	K14D:N/SPARE TIRE
9	43180-79J01	TIRE, SPARE (T135/90D16) (CHENG SHIN)	1	W/SPARE TIRE
10	43290-79J10	WHEEL, SPARE (16X4J)	1	W/SPARE TIRE
11	79167-52R00	PLACARD, WHEEL	1	W/SPARE TIRE
12	43130-60E10	VALVE, TIRE (TR414) (BS)	1	
13-1	43221-85E20	WEIGHT, WHEEL BALANCE (5GRAM)	AR	
13-2	43222-85E20	WEIGHT, WHEEL BALANCE (10GRAM)	AR	
13-3	43223-85E20	WEIGHT, WHEEL BALANCE (15GRAM)	AR	
13-4	43224-85E20	WEIGHT, WHEEL BALANCE (20GRAM)	AR	
13-5	43225-85E20	WEIGHT, WHEEL BALANCE (25GRAM)	AR	
13-6	43226-85E20	WEIGHT, WHEEL BALANCE (30GRAM)	AR	
13-7	43227-85E20	WEIGHT, WHEEL BALANCE (35GRAM)	AR	
13-8	43228-85E20	WEIGHT, WHEEL BALANCE (40GRAM)	AR	
13-9	43231-85E20	WEIGHT, WHEEL BALANCE (45GRAM)	AR	
14	79161-54P00	PLACARD, TIRE INFORMATION	1	K10C
15	79161-74S00	PLACARD, TIRE INFORMATION	1	K14D

FIG.449B

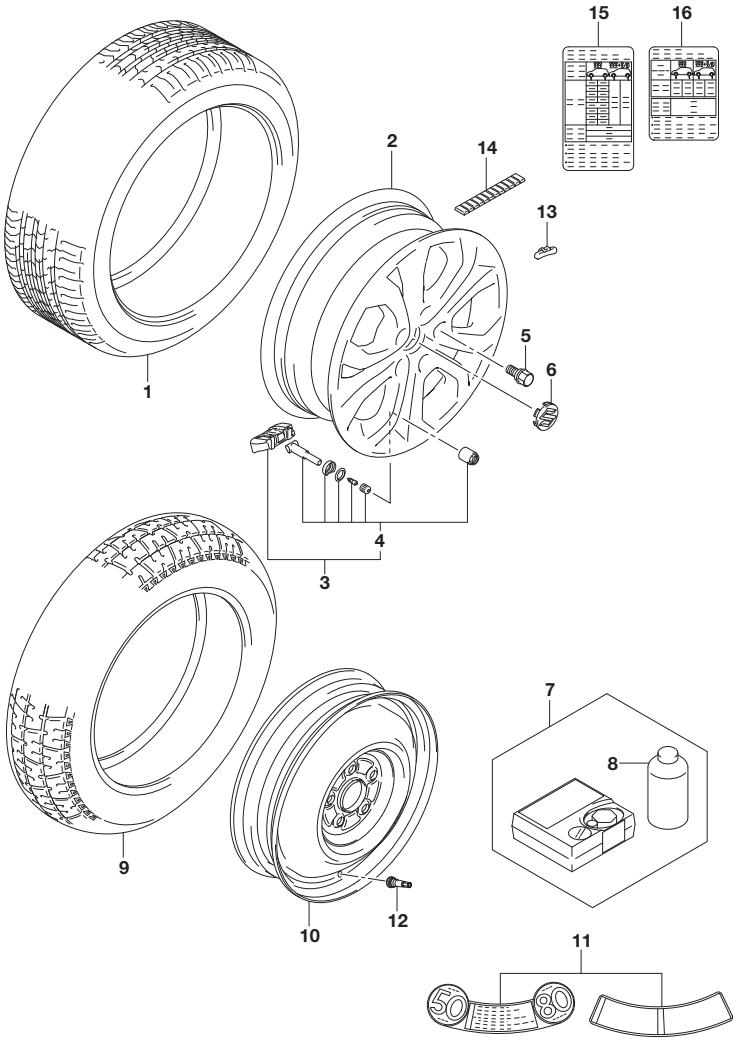

FIG.449B (3-B-3) ROAD WHEEL/TIRE (SEE NOTE)

REF NO.	PART NO.	DESCRIPTION	Q'TY	REMARKS
1	43110-54P20	TIRE (215/60R16 95H) (CONTINENTAL)	4	
2	43210-54P50-0BK	WHEEL, ALUMI (16X6,1/2J) (GRAY)	4	
3	43139-61M00	VALVE SET, TPMS	4	
4	43138-61M00	.SEAL SET, TPMS	4	
5	43423-86G01	BOLT, WHEEL	20	
6	43252-51K20-DB7	CAP, ALUMI WHEEL CTR (BLACK/CHROME)	4	
7-1	43310-61M00	REPAIR KIT, TIRE	1	(K10C,K14C):N/SPARE TIRE
7-2	43310-74S00	REPAIR KIT, TIRE	1	K14D:N/SPARE TIRE
8-1	43312-61M00	.SEALANT, TIRE REPAIR	1	(K10C,K14C):N/SPARE TIRE
8-2	43312-74S00	.SEALANT, TIRE REPAIR	1	K14D:N/SPARE TIRE
9	43180-79J01	TIRE, SPARE (T135/90D16) (CHENG SHIN)	1	W/SPARE TIRE
10	43290-79J10	WHEEL, SPARE (16X4J)	1	W/SPARE TIRE
11	79167-52R00	PLACARD, WHEEL	1	W/SPARE TIRE
12	43130-60E10	VALVE, TIRE (TR414) (BS)	1	
13-1	43222-62J00	WEIGHT, WHEEL BALANCE (5GRAM)	AR	
13-2	43222-62J10	WEIGHT, WHEEL BALANCE (10GRAM)	AR	
13-3	43222-62J20	WEIGHT, WHEEL BALANCE (15GRAM)	AR	
13-4	43222-62J30	WEIGHT, WHEEL BALANCE (20GRAM)	AR	
13-5	43222-62J40	WEIGHT, WHEEL BALANCE (25GRAM)	AR	
13-6	43222-62J50	WEIGHT, WHEEL BALANCE (30GRAM)	AR	
13-7	43222-62J60	WEIGHT, WHEEL BALANCE (35GRAM)	AR	
13-8	43222-62J70	WEIGHT, WHEEL BALANCE (40GRAM)	AR	
13-9	43222-62J80	WEIGHT, WHEEL BALANCE (45GRAM)	AR	

NOTE : W/16 INCH TIRE:W/ALUMINUM WHEEL

FIG.449B

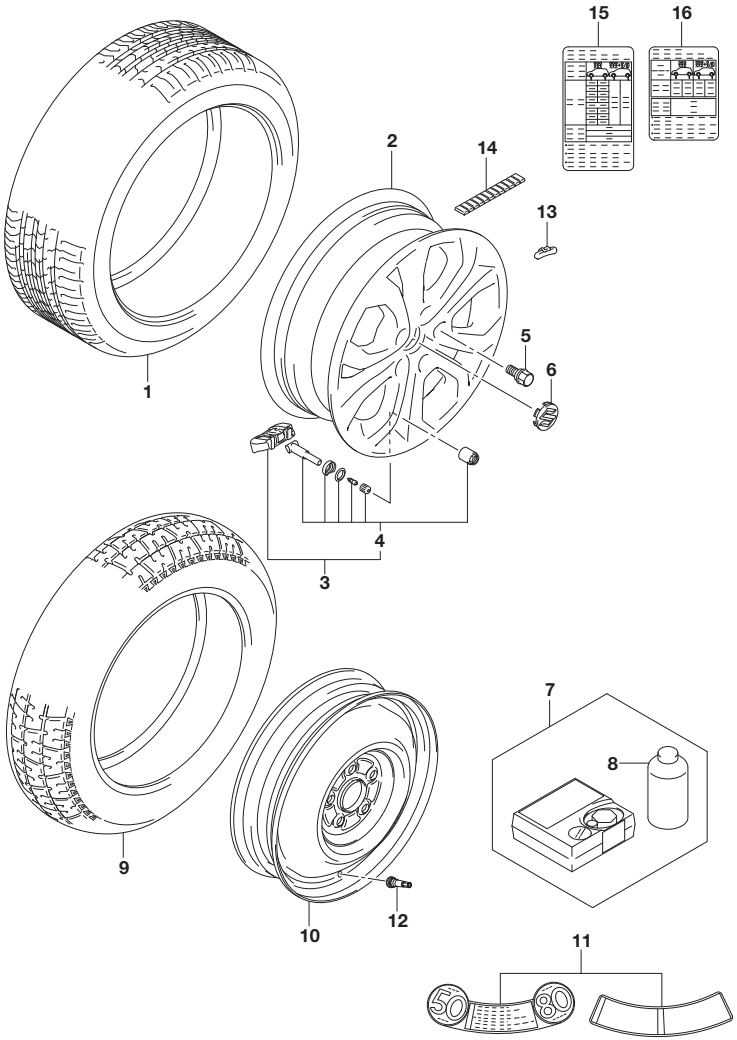

FIG.449B (3-B-4) ROAD WHEEL/TIRE (SEE NOTE)

REF NO.	PART NO.	DESCRIPTION	Q'TY	REMARKS
14-1	43223-62J00	WEIGHT, WHEEL BALANCE (5GRAM)	AR	
14-2	43223-62J10	WEIGHT, WHEEL BALANCE (10GRAM)	AR	
14-3	43223-62J20	WEIGHT, WHEEL BALANCE (15GRAM)	AR	
14-4	43223-62J30	WEIGHT, WHEEL BALANCE (20GRAM)	AR	
14-5	43223-62J40	WEIGHT, WHEEL BALANCE (25GRAM)	AR	
14-6	43223-62J50	WEIGHT, WHEEL BALANCE (30GRAM)	AR	
14-7	43223-62J60	WEIGHT, WHEEL BALANCE (35GRAM)	AR	
14-8	43223-62J70	WEIGHT, WHEEL BALANCE (40GRAM)	AR	
14-9	43223-62J80	WEIGHT, WHEEL BALANCE (45GRAM)	AR	
15	79161-54P00	PLACARD, TIRE INFORMATION	1	K10C,K14C
16	79161-74S00	PLACARD, TIRE INFORMATION	1	K14D

NOTE : W/16 INCH TIRE:W/ALUMINUM WHEEL

FIG.449C

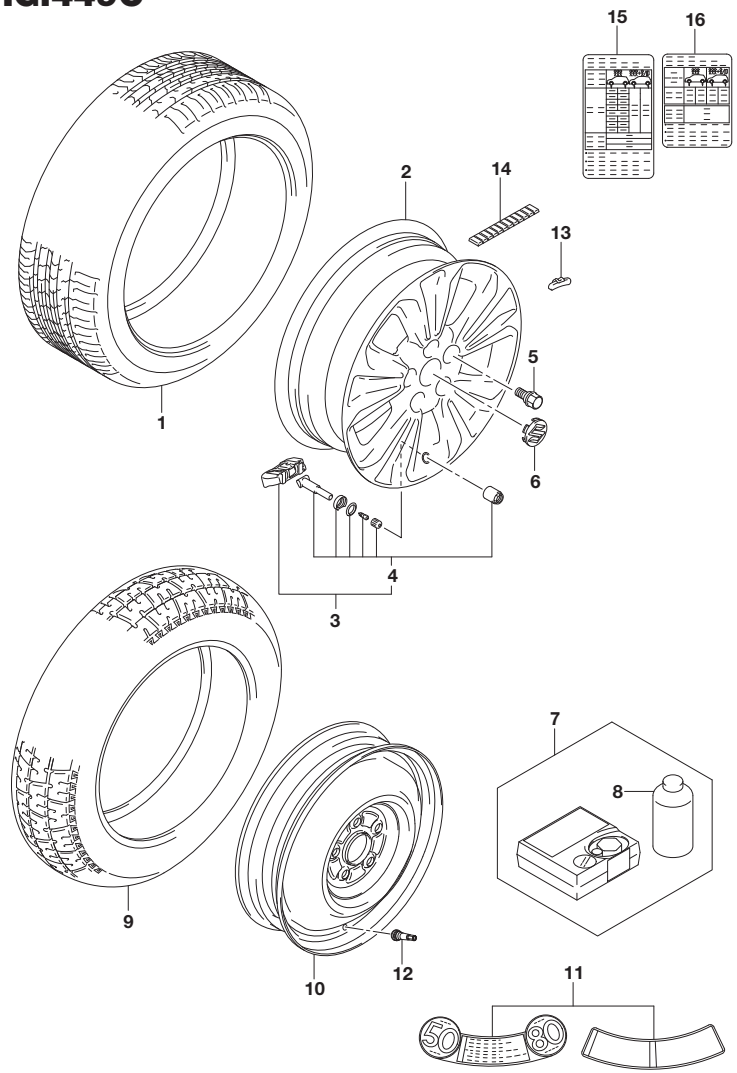

FIG.449C (3-B-5) ROAD WHEEL/TIRE (W/17 INCH TIRE)

REF NO.	PART NO.	DESCRIPTION	Q'TY	REMARKS
1	43110-54P70	TIRE (215/55R17 94V) (CONTINENTAL)	4	
2-1	43210-54P80-0BK	WHEEL, ALUMI (17X6 1/2J) (GRAY)	4	PAINTED
2-2	43210-54P90-ZMS	WHEEL, ALUMI (17X6 1/2J) (BLACK)	4	POLISHED SURFACE
3	43139-61M00	VALVE SET, TPMS	4	
4	43138-61M00	.SEAL SET, TPMS	4	
5	43423-86G01	BOLT, WHEEL	20	
6	43252-51K20-DB7	CAP, ALUMI WHEEL CTR (BLACK/CHROME)	4	
7-1	43310-61M00	REPAIR KIT, TIRE	1	(K10C,K14C):N/SPARE TIRE
7-2	43310-74S00	REPAIR KIT, TIRE	1	K14D:N/SPARE TIRE
8-1	43312-61M00	.SEALANT, TIRE REPAIR	1	(K10C,K14C):N/SPARE TIRE
8-2	43312-74S00	.SEALANT, TIRE REPAIR	1	K14D:N/SPARE TIRE
9	43180-79J01	TIRE, SPARE (T135/90D16) (CHENG SHIN)	1	W/SPARE TIRE
10	43290-79J10	WHEEL, SPARE (16X4J)	1	W/SPARE TIRE
11	79167-52R00	PLACARD, WHEEL	1	W/SPARE TIRE
12	43130-60E10	VALVE, TIRE (TR414) (BS)	1	W/SPARE TIRE
13-1	43222-62J00	WEIGHT, WHEEL BALANCE (5GRAM)	AR	
13-2	43222-62J10	WEIGHT, WHEEL BALANCE (10GRAM)	AR	
13-3	43222-62J20	WEIGHT, WHEEL BALANCE (15GRAM)	AR	
13-4	43222-62J30	WEIGHT, WHEEL BALANCE (20GRAM)	AR	
13-5	43222-62J40	WEIGHT, WHEEL BALANCE (25GRAM)	AR	
13-6	43222-62J50	WEIGHT, WHEEL BALANCE (30GRAM)	AR	
13-7	43222-62J60	WEIGHT, WHEEL BALANCE (35GRAM)	AR	
13-8	43222-62J70	WEIGHT, WHEEL BALANCE (40GRAM)	AR	
13-9	43222-62J80	WEIGHT, WHEEL BALANCE (45GRAM)	AR	

FIG.449C

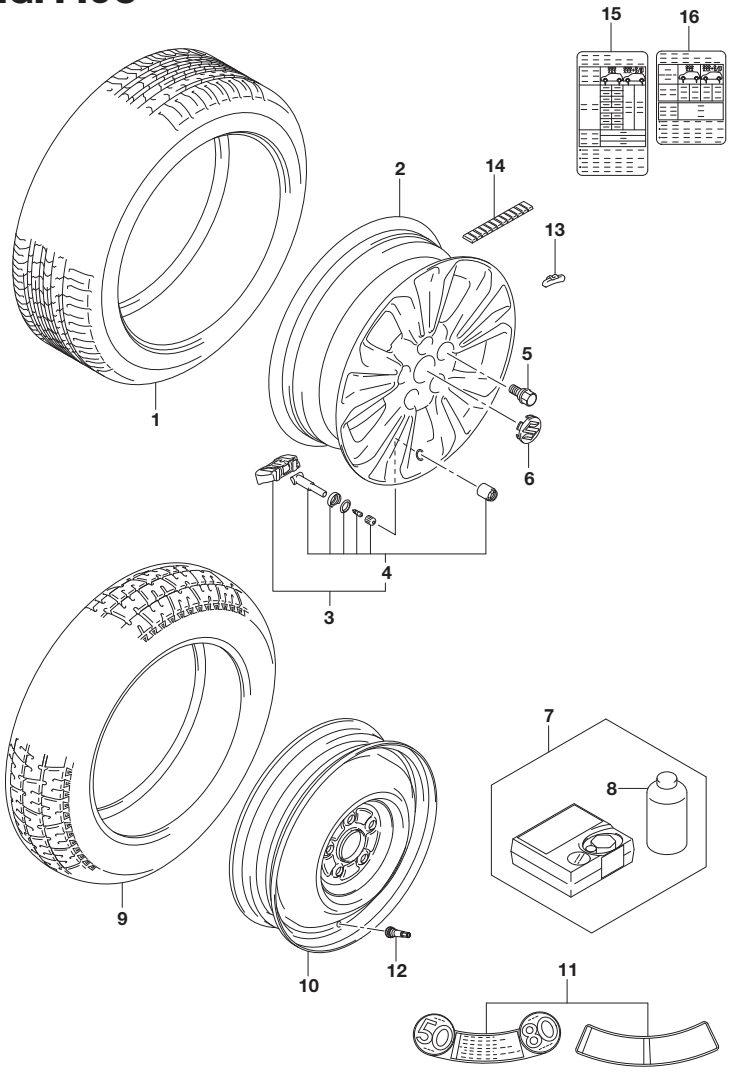

FIG.449C (3-B-6) ROAD WHEEL/TIRE (W/17 INCH TIRE)

REF NO.	PART NO.	DESCRIPTION	Q'TY	REMARKS
14-1	43223-62J00	WEIGHT, WHEEL BALANCE (5GRAM)	AR	
14-2	43223-62J10	WEIGHT, WHEEL BALANCE (10GRAM)	AR	
14-3	43223-62J20	WEIGHT, WHEEL BALANCE (15GRAM)	AR	
14-4	43223-62J30	WEIGHT, WHEEL BALANCE (20GRAM)	AR	
14-5	43223-62J40	WEIGHT, WHEEL BALANCE (25GRAM)	AR	
14-6	43223-62J50	WEIGHT, WHEEL BALANCE (30GRAM)	AR	
14-7	43223-62J60	WEIGHT, WHEEL BALANCE (35GRAM)	AR	
14-8	43223-62J70	WEIGHT, WHEEL BALANCE (40GRAM)	AR	
14-9	43223-62J80	WEIGHT, WHEEL BALANCE (45GRAM)	AR	
15	79161-54P00	PLACARD, TIRE INFORMATION	1	K10C,K14C
16	79161-74S00	PLACARD, TIRE INFORMATION	1	K14D

FIG.451A

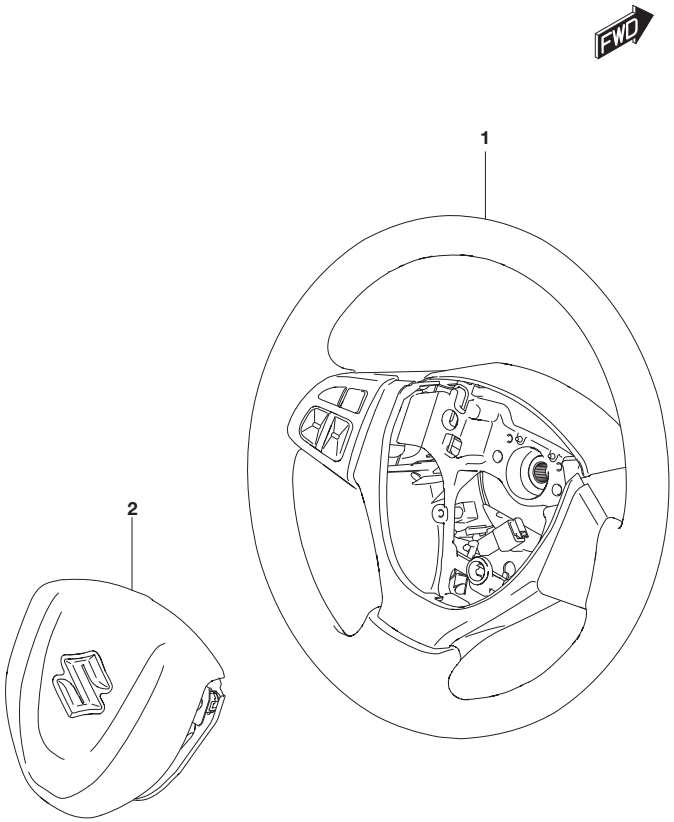

FIG.451A (3-B-7) STEERING WHEEL (SEE NOTE 1)

REF NO.	PART NO.	DESCRIPTION	Q'TY	REMARKS
1	48110-60P11-GJL	WHEEL ASSY, STEERING (BLACK/SILVER)	1	

NOTE 1 : W/URETHANE STEERING:N/CRUISE CONTROL:N/HANDS FREE SWITCH

FIG.451B(3-B-10) STEERING WHEEL
(W/URETHANE STEERING:N/CRUISE CONTROL:W/HANDS FREE SWITCH)
FIG.451C(3-B-11) STEERING WHEEL
(W/URETHANE STEERING:W/CRUISE CONTROL:N/HANDS FREE SWITCH)
FIG.451D(3-B-12) STEERING WHEEL
(W/URETHANE STEERING:W/CRUISE CONTROL:W/HANDS FREE SWITCH)
FIG.451E(3-B-13) STEERING WHEEL
(W/LEATHER STEERING:N/PADDLE SWITCH:N/AEB CAMERA:
N/HANDS FREE SWITCH)
FIG.451F(3-B-14) STEERING WHEEL
(W/LEATHER STEERING:N/PADDLE SWITCH:N/AEB CAMERA:
W/HANDS FREE SWITCH)
FIG.451G(3-C-2) STEERING WHEEL
(W/LEATHER STEERING:N/PADDLE SWITCH:W/AEB MONAURAL CAMERA:
N/HANDS FREE SWITCH)
FIG.451H(3-C-3) STEERING WHEEL
(W/LEATHER STEERING:N/PADDLE SWITCH:W/AEB MONAURAL CAMERA:
W/HANDS FREE SWITCH)

FIG.451A

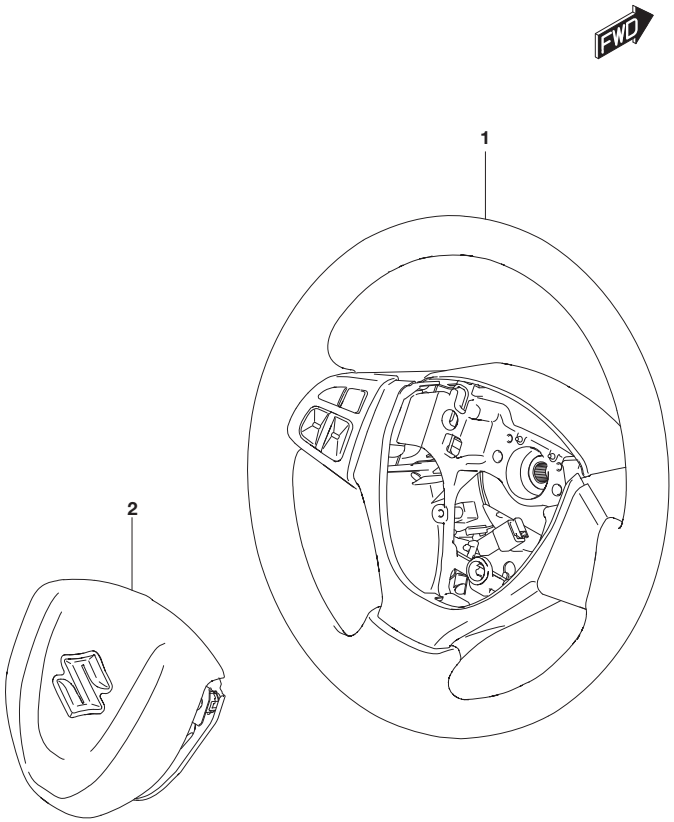

FIG.451A (3-B-8) STEERING WHEEL (SEE NOTE 1)

REF NO.	PART NO.	DESCRIPTION	Q'TY	REMARKS

FIG.451J(3-C-4) STEERING WHEEL
(W/LEATHER STEERING:W/PADDLE SWITCH:N/AEB CAMERA:
N/HANDS FREE SWITCH)
FIG.451K(3-C-5) STEERING WHEEL
(W/LEATHER STEERING:W/PADDLE SWITCH:N/AEB CAMERA:
W/HANDS FREE SWITCH)
FIG.451L(3-C-6) STEERING WHEEL
(W/LEATHER STEERING:W/PADDLE SWITCH:W/AEB MONAURAL CAMERA:
N/HANDS FREE SWITCH)
FIG.451M(3-C-7) STEERING WHEEL
(W/LEATHER STEERING:W/PADDLE SWITCH:W/AEB MONAURAL CAMERA:
W/HANDS FREE SWITCH)

FIG.451A

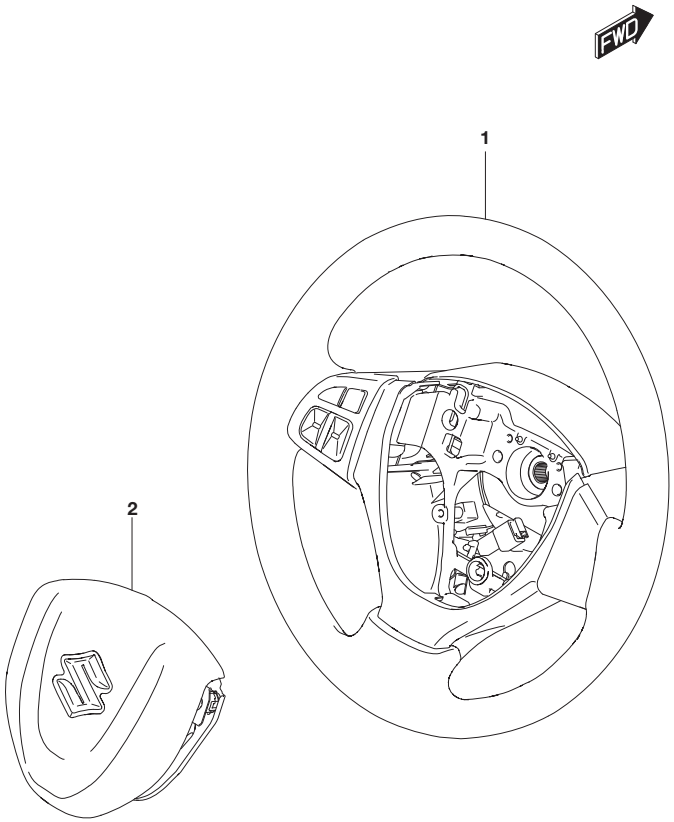

FIG.451A (3-B-9) STEERING WHEEL (SEE NOTE 1)

REF NO.	PART NO.	DESCRIPTION	Q'TY	REMARKS
2	48150-54P10-C48	MODULE ASSY, AIRBAG (CHROME/BLACK)	1	SEE NOTE 2

NOTE 1 : W/URETHANE STEERING:N/CRUISE CONTROL:N/HANDS FREE SWITCH

NOTE 2 : SPECIAL PROCEDURES ARE REQUIRED FOR SERVICING OR REPLACING AN AIR BAG. FOR THAT REASON, ONLY A FACTORY-AUTHORIZED DEALER, WHO IS SPECIALLY TRAINED, SHOULD BE ALLOWED TO SERVICE OR REPLACE YOUR AIR BAGS.

FIG.451B

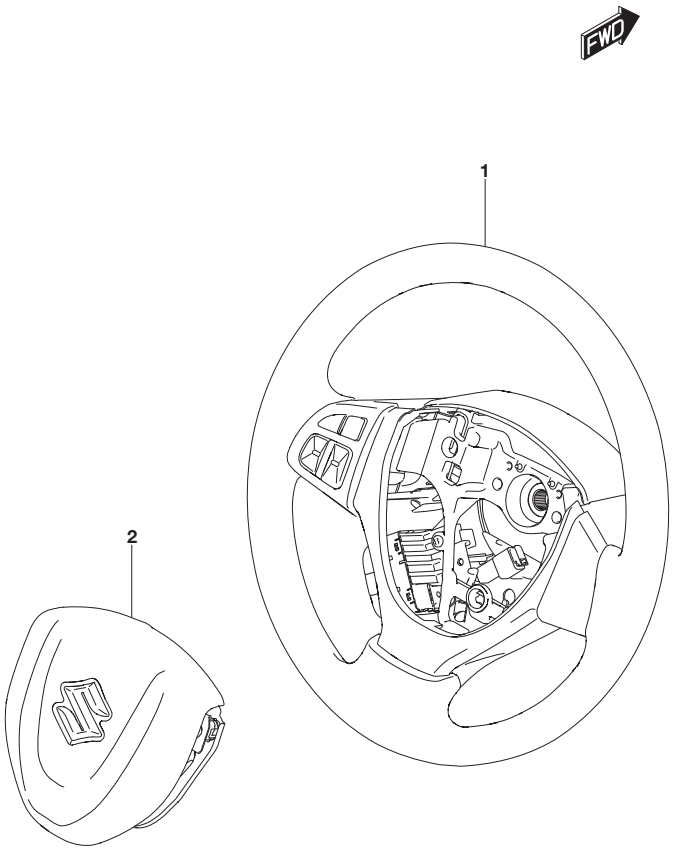

FIG.451B (3-B-10) STEERING WHEEL (SEE NOTE 1)

REF NO.	PART NO.	DESCRIPTION	Q'TY	REMARKS
1	48110-60P31-GJL	WHEEL ASSY, STEERING (BLACK/SILVER)	1	
2	48150-54P10-C48	MODULE ASSY, AIRBAG (CHROME/BLACK)	1	SEE NOTE 2

NOTE 1 : W/URETHANE STEERING:N/CRUISE CONTROL:W/HANDS FREE SWITCH

NOTE 2 : SPECIAL PROCEDURES ARE REQUIRED FOR SERVICING OR REPLACING AN AIR BAG. FOR THAT REASON, ONLY A FACTORY-AUTHORIZED DEALER, WHO IS SPECIALLY TRAINED, SHOULD BE ALLOWED TO SERVICE OR REPLACE YOUR AIR BAGS.

FIG.451C

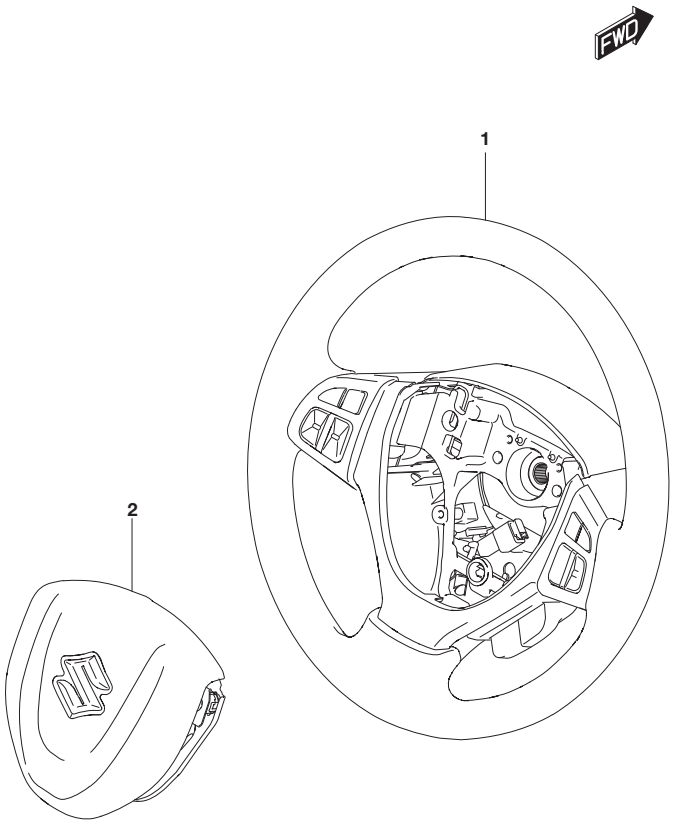

FIG.451C (3-B-11) STEERING WHEEL (SEE NOTE 1)

REF NO.	PART NO.	DESCRIPTION	Q'TY	REMARKS
1	48110-74S00-GJL	WHEEL ASSY, STEERING (BLACK/SILVER)	1	
2	48150-54P10-C48	MODULE ASSY, AIRBAG (CHROME/BLACK)	1	SEE NOTE 2

NOTE 1 : W/URETHANE STEERING:W/CRUISE CONTROL:N/HANDS FREE SWITCH

NOTE 2 : SPECIAL PROCEDURES ARE REQUIRED FOR SERVICING OR REPLACING AN AIR BAG. FOR THAT REASON, ONLY A FACTORY-AUTHORIZED DEALER, WHO IS SPECIALLY TRAINED, SHOULD BE ALLOWED TO SERVICE OR REPLACE YOUR AIR BAGS.

FIG.451D

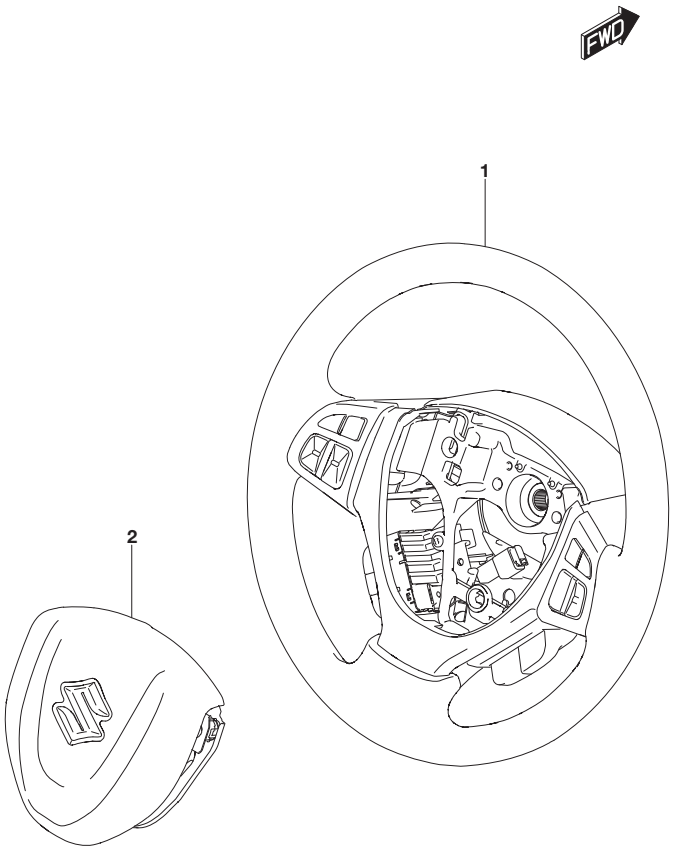

FIG.451D (3-B-12) STEERING WHEEL (SEE NOTE 1)

REF NO.	PART NO.	DESCRIPTION	Q'TY	REMARKS
1	48110-74S10-GJL	WHEEL ASSY, STEERING (BLACK/SILVER)	1	
2	48150-54P10-C48	MODULE ASSY, AIRBAG (CHROME/BLACK)	1	SEE NOTE 2

NOTE 1 : W/URETHANE STEERING:W/CRUISE CONTROL:W/HANDS FREE SWITCH

NOTE 2 : SPECIAL PROCEDURES ARE REQUIRED FOR SERVICING OR REPLACING AN AIR BAG. FOR THAT REASON, ONLY A FACTORY-AUTHORIZED DEALER, WHO IS SPECIALLY TRAINED, SHOULD BE ALLOWED TO SERVICE OR REPLACE YOUR AIR BAGS.

FIG.451E

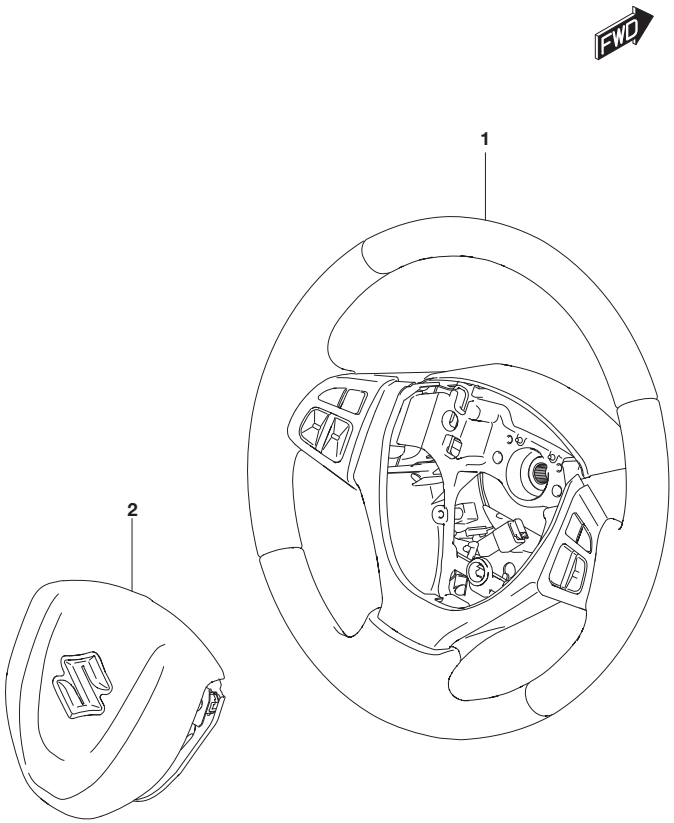

FIG.451E (3-B-13) STEERING WHEEL (SEE NOTE 1)

REF NO.	PART NO.	DESCRIPTION	Q'TY	REMARKS
1	48110-61MD1-GJL	WHEEL ASSY, STEERING (BLACK/SILVER)	1	
2	48150-54P10-C48	MODULE ASSY, AIRBAG (CHROME/BLACK)	1	SEE NOTE 2

NOTE 1 : W/LEATHER STEERING:N/PADDLE SWITCH:N/AEB CAMERA: N/HANDS FREE SWITCH

NOTE 2 : SPECIAL PROCEDURES ARE REQUIRED FOR SERVICING OR REPLACING AN AIR BAG. FOR THAT REASON, ONLY A FACTORY-AUTHORIZED DEALER, WHO IS SPECIALLY TRAINED, SHOULD BE ALLOWED TO SERVICE OR REPLACE YOUR AIR BAGS.

FIG.451F

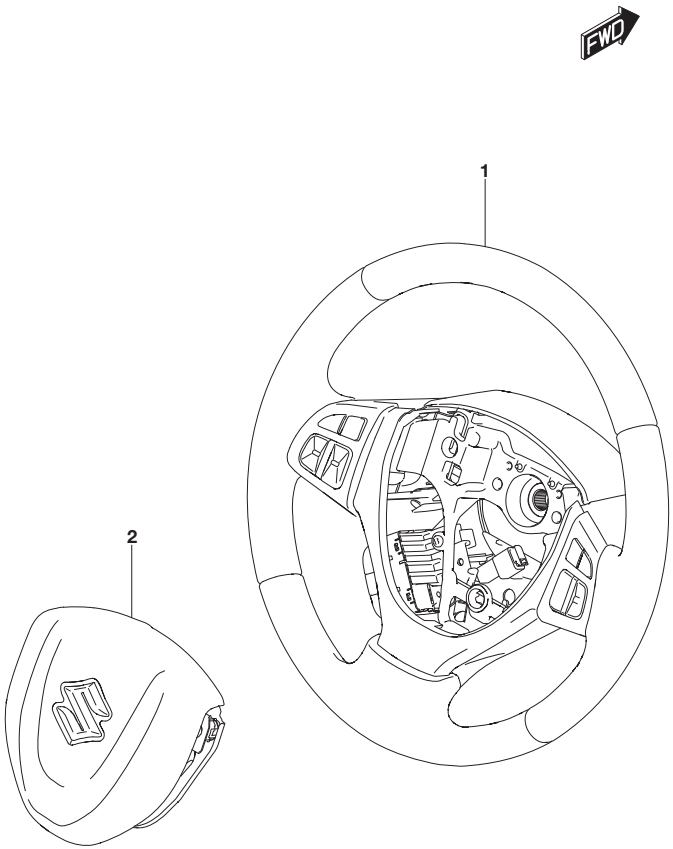

FIG.451F (3-B-14) STEERING WHEEL (SEE NOTE 1)

REF NO.	PART NO.	DESCRIPTION	Q'TY	REMARKS
1-1	48110-60P41-GJL	WHEEL ASSY, STRG (BLACK/SILVER)	1	N/BACK CAMERA
1-2	48110-61ME1-GJL	WHEEL ASSY, STRG (BLACK/SILVER)	1	W/BACK CAMERA
2	48150-54P10-C48	MODULE ASSY, AIRBAG (CHROME/BLACK)	1	SEE NOTE 2

NOTE 1 : W/LEATHER STEERING:N/PADDLE SWITCH:N/AEB CAMERA:
W/HANDS FREE SWITCH

NOTE 2 : SPECIAL PROCEDURES ARE REQUIRED FOR SERVICING OR REPLACING AN AIR BAG. FOR THAT REASON, ONLY A FACTORY-AUTHORIZED DEALER, WHO IS SPECIALLY TRAINED, SHOULD BE ALLOWED TO SERVICE OR REPLACE YOUR AIR BAGS.

FIG.451G

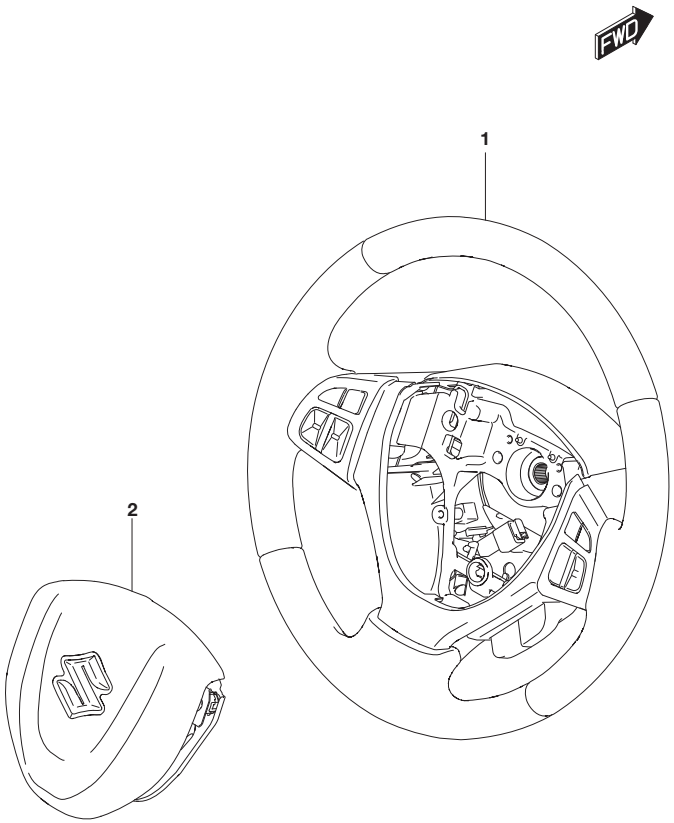

FIG.451G (3-C-2) STEERING WHEEL (SEE NOTE 1)

REF NO.	PART NO.	DESCRIPTION	Q'TY	REMARKS
1	48110-53S01-GJL	WHEEL ASSY, STEERING (BLACK/SILVER)	1	
2	48150-54P10-C48	MODULE ASSY, AIRBAG (CHROME/BLACK)	1	SEE NOTE 2

NOTE 1 : W/LEATHER STEERING:N/PADDLE SWITCH:W/AEB MONAURAL CAMERA: N/HANDS FREE SWITCH

NOTE 2 : SPECIAL PROCEDURES ARE REQUIRED FOR SERVICING OR REPLACING AN AIR BAG. FOR THAT REASON, ONLY A FACTORY-AUTHORIZED DEALER, WHO IS SPECIALLY TRAINED, SHOULD BE ALLOWED TO SERVICE OR REPLACE YOUR AIR BAGS.

FIG.451H

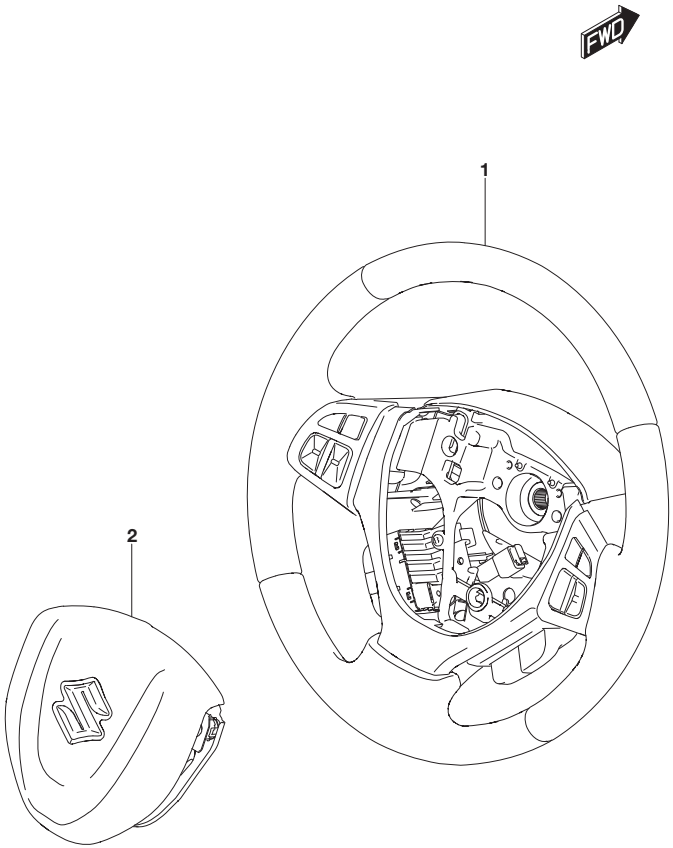

FIG.451H (3-C-3) STEERING WHEEL (SEE NOTE 1)

REF NO.	PART NO.	DESCRIPTION	Q'TY	REMARKS
1-1	48110-53S11-GJL	WHEEL ASSY, STRG (BLACK/SILVER)	1	N/BACK CAMERA
1-2	48110-53S21-GJL	WHEEL ASSY, STRG (BLACK/SILVER)	1	W/BACK CAMERA
2	48150-54P10-C48	MODULE ASSY, AIRBAG (CHROME/BLACK)	1	SEE NOTE 2

NOTE 1 : W/LEATHER STEERING:N/PADDLE SWITCH:W/AEB MONAURAL CAMERA: W/HANDS FREE SWITCH

NOTE 2 : SPECIAL PROCEDURES ARE REQUIRED FOR SERVICING OR REPLACING AN AIR BAG. FOR THAT REASON, ONLY A FACTORY-AUTHORIZED DEALER, WHO IS SPECIALLY TRAINED, SHOULD BE ALLOWED TO SERVICE OR REPLACE YOUR AIR BAGS.

FIG.451J

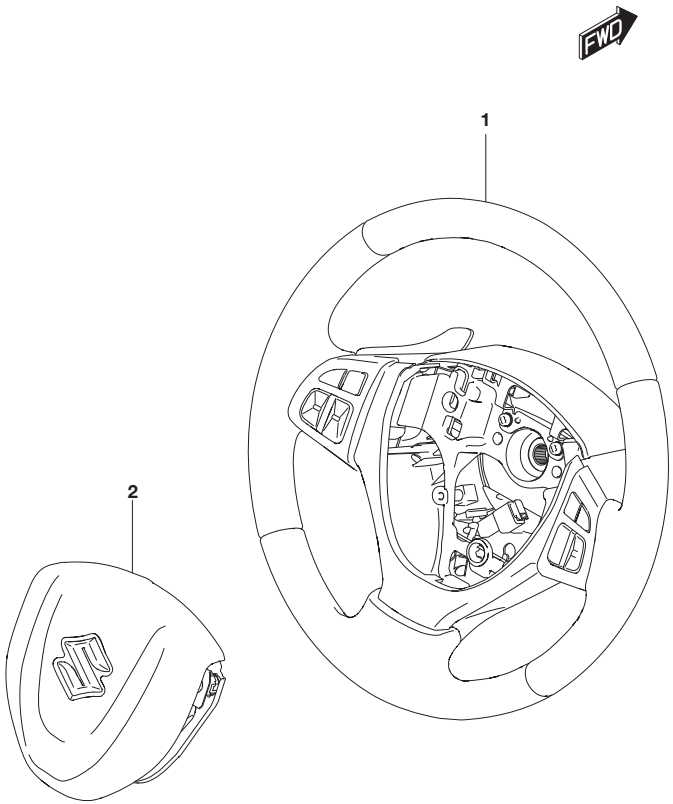

FIG.451J (3-C-4) STEERING WHEEL (SEE NOTE)

REF NO.	PART NO.	DESCRIPTION	Q'TY	REMARKS
1	48110-61MJ1-GJL	WHEEL ASSY, STRG (BLACK/SILVER)	1	
2	48150-54P10-C48	MODULE ASSY, AIRBAG (CHROME/BLACK)	1	

NOTE : W/LEATHER STEERING:W/PADDLE SWITCH:N/AEB CAMERA: N/HANDS FREE SWITCH

FIG.451K

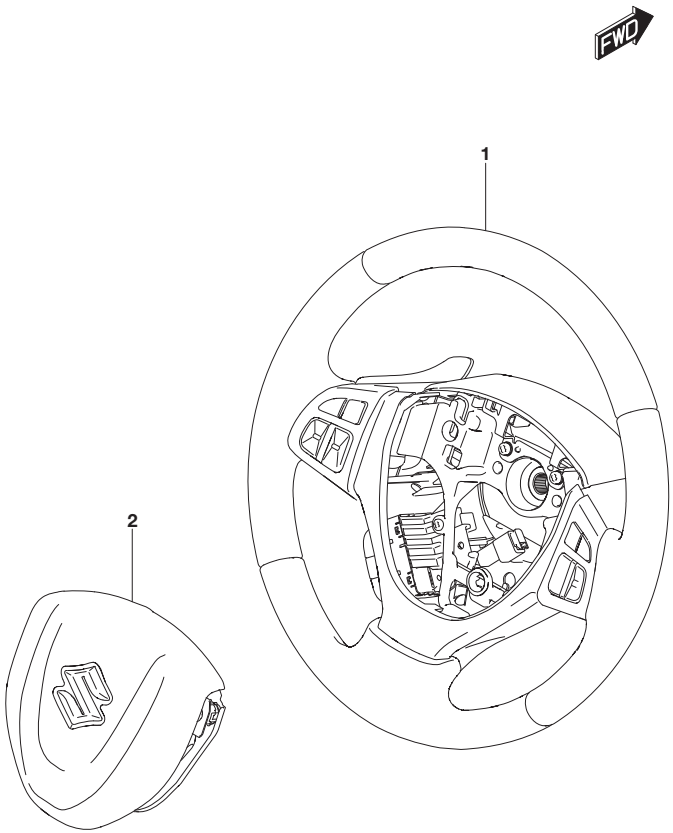

FIG.451K (3-C-5) STEERING WHEEL (SEE NOTE)

REF NO.	PART NO.	DESCRIPTION	Q'TY	REMARKS
1-1	48110-60P50-GJL	WHEEL ASSY, STRG (BLACK/SILVER)	1	N/BACK CAMERA
1-2	48110-61ML1-GJL	WHEEL ASSY, STRG (BLACK/SILVER)	1	W/BACK CAMERA
2	48150-54P10-C48	MODULE ASSY, AIRBAG (CHROME/BLACK)	1	

NOTE : W/LEATHER STEERING:W/PADDLE SWITCH:N/AEB CAMERA:
W/HANDS FREE SWITCH

FIG.451L

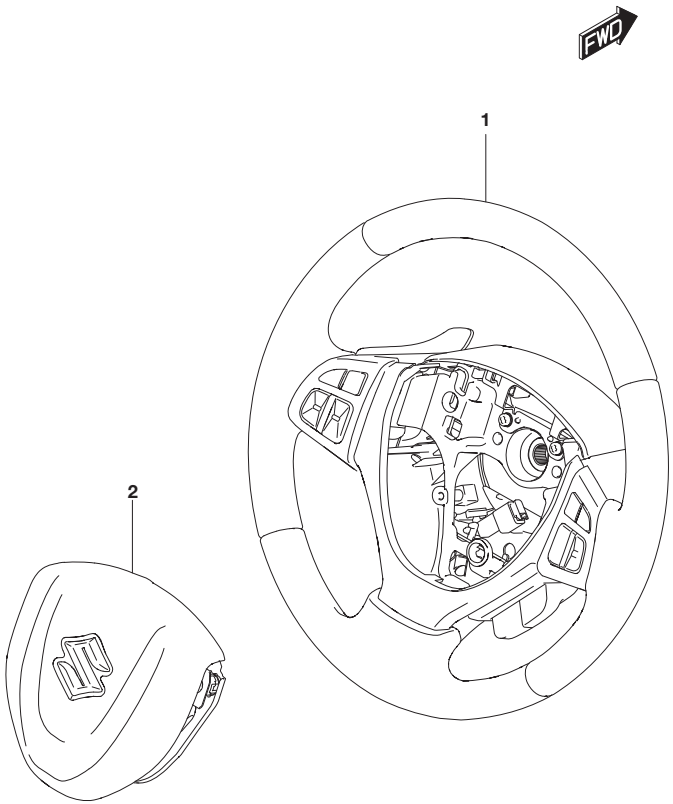

FIG.451L (3-C-6) STEERING WHEEL (SEE NOTE 1)

REF NO.	PART NO.	DESCRIPTION	Q'TY	REMARKS
1	48110-53S30-GJL	WHEEL ASSY, STEERING (BLACK/SILVER)	1	
2	48150-54P10-C48	MODULE ASSY, AIRBAG (CHROME/BLACK)	1	SEE NOTE 2

NOTE 1 : W/LEATHER STEERING:W/PADDLE SWITCH:W/AEB MONAURAL CAMERA: N/HANDS FREE SWITCH

NOTE 2 : SPECIAL PROCEDURES ARE REQUIRED FOR SERVICING OR REPLACING AN AIR BAG. FOR THAT REASON, ONLY A FACTORY-AUTHORIZED DEALER, WHO IS SPECIALLY TRAINED, SHOULD BE ALLOWED TO SERVICE OR REPLACE YOUR AIR BAGS.

FIG.451M

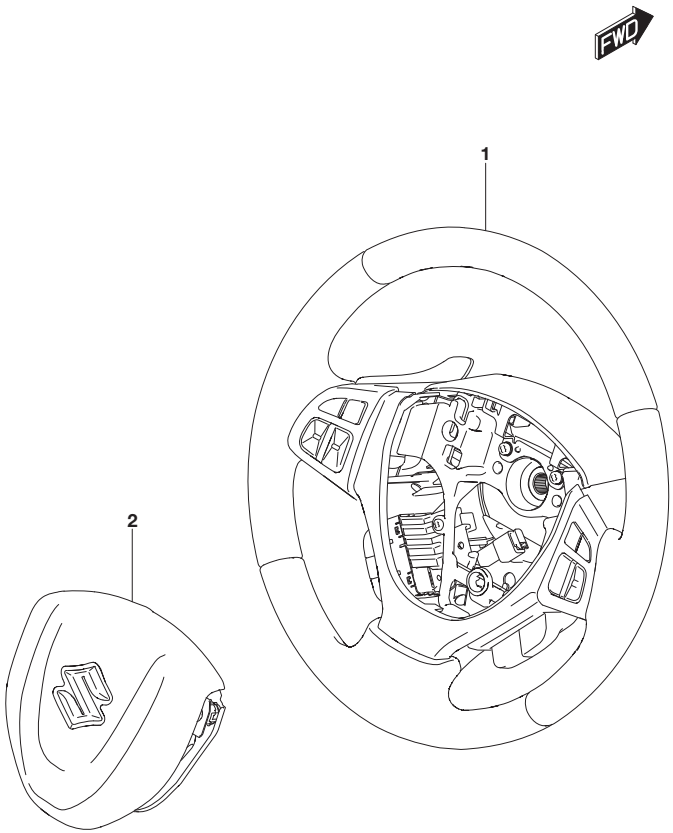

FIG.451M (3-C-7) STEERING WHEEL (SEE NOTE 1)

REF NO.	PART NO.	DESCRIPTION	Q'TY	REMARKS
1-1	48110-53S40-GJL	WHEEL ASSY, STRG (BLACK/SILVER)	1	N/BACK CAMERA
1-2	48110-53S50-GJL	WHEEL ASSY, STRG (BLACK/SILVER)	1	W/BACK CAMERA
2	48150-54P10-C48	MODULE ASSY, AIRBAG (CHROME/BLACK)	1	SEE NOTE 2

NOTE 1 : W/LEATHER STEERING:W/PADDLE SWITCH:W/AEB MONAURAL CAMERA: W/HANDS FREE SWITCH

NOTE 2 : SPECIAL PROCEDURES ARE REQUIRED FOR SERVICING OR REPLACING AN AIR BAG. FOR THAT REASON, ONLY A FACTORY-AUTHORIZED DEALER, WHO IS SPECIALLY TRAINED, SHOULD BE ALLOWED TO SERVICE OR REPLACE YOUR AIR BAGS.

FIG.453A

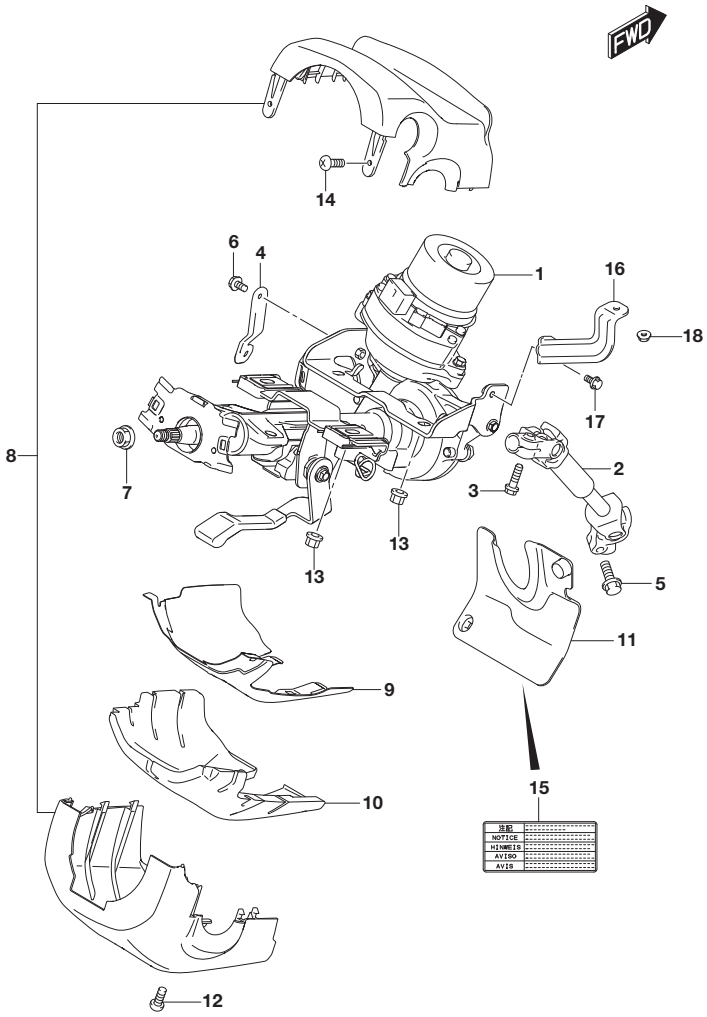

FIG.453A (3-C-8) STEERING COLUMN (LHD:N/PUSH START)

REF NO.	PART NO.	DESCRIPTION	Q'TY	REMARKS
1-1	48210-86RB1	E.P.S ASSY, STRG COL UPR	1	N/AEB CAMERA:(K10C,K14C)
1-2	48210-74SB0	E.P.S ASSY, STRG COL UPR	1	N/AEB CAMERA:K14D
1-3	48210-86R21	E.P.S ASSY, STRG COL UPR	1	W/AEB MONAURAL CAMERA: (K10C,K14C)
1-4	48210-74S20	E.P.S ASSY, STRG COL UPR	1	W/AEB MONAURAL CAMERA:K14D
2	48220-61M50	JOINT ASSY, STRG COL LWR	1	
3	48218-61M00	PINCH BOLT	1	
4	48253-54P50	BRACKET, EPS HARNESS	1	
5	09117-08106	BOLT (8X30)	1	
6	01550-0612A	BOLT	1	
7	08316-1012A	NUT	1	
8	48400-61M20-5PK	COVER ASSY, STEERING COLUMN (BLACK)	1	
9	48431-61M00	PLATE, KNEE PROTECTOR	1	
10	48435-61M00	PAD, STRG COLUMN COVER	1	
11	48481-61M51	COVER, STRG JOINT	1	
12	09136-05030	SCREW (5X12)	1	
13	09159-08135	NUT	4	
14	03211-0512B	SCREW	2	
15	79172-80G02	LABEL, STRG JOINT	1	
16	48251-54P50	REINF, STRG COLUMN	1	6AT:K14C
17	01550-0612A	BOLT	1	6AT:K14C
18	08316-1006A	NUT	1	6AT:K14C

FIG.453B(3-C-9) STEERING COLUMN (LHD:W/PUSH START)
FIG.453C(3-C-10) STEERING COLUMN (RHD:N/PUSH START)
FIG.453D(3-C-11) STEERING COLUMN (RHD:W/PUSH START)

FIG.453B

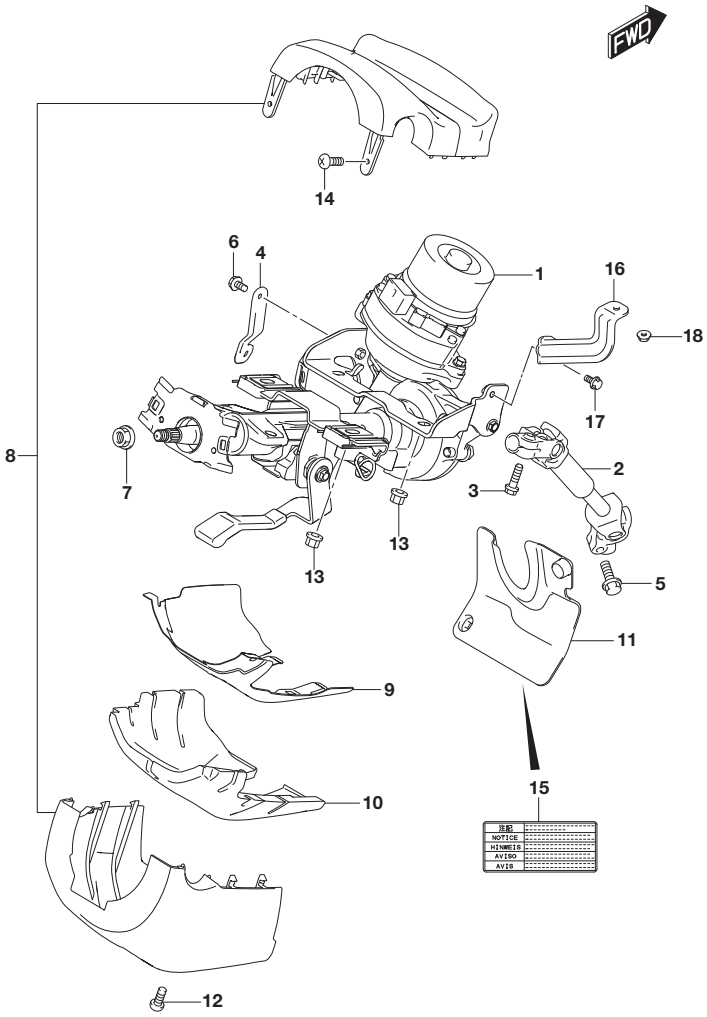

FIG.453B (3-C-9) STEERING COLUMN (LHD:W/PUSH START)

REF NO.	PART NO.	DESCRIPTION	Q'TY	REMARKS
1-1	48210-86R41	E.P.S ASSY, STRG COL UPR	1	K10C,K14C
1-2	48210-74S40	E.P.S ASSY, STRG COL UPR	1	K14D
2	48220-61M50	JOINT ASSY, STRG COL LWR	1	
3	48218-61M00	PINCH BOLT	1	
4	48253-54P50	BRACKET, EPS HARNESS	1	
5	09117-08106	BOLT (8X30)	1	
6	01550-0612A	BOLT	1	
7	08316-1012A	NUT	1	
8	48400-61M10-5PK	COVER ASSY, STRG COLUMN (BLACK)	1	
9	48431-61M00	PLATE, KNEE PROTECTOR	1	
10	48435-61M00	PAD, STRG COLUMN COVER	1	
11	48481-61M51	COVER, STRG JOINT	1	
12	09136-05030	SCREW (5X12)	1	
13	09159-08135	NUT	4	
14	03211-0512B	SCREW	2	
15	79172-80G02	LABEL, STRG JOINT	1	
16	48251-54P50	REINF, STRG COLUMN	1	6AT:K14C
17	01550-0612A	BOLT	1	6AT:K14C
18	08316-1006A	NUT	1	6AT:K14C

FIG.453C

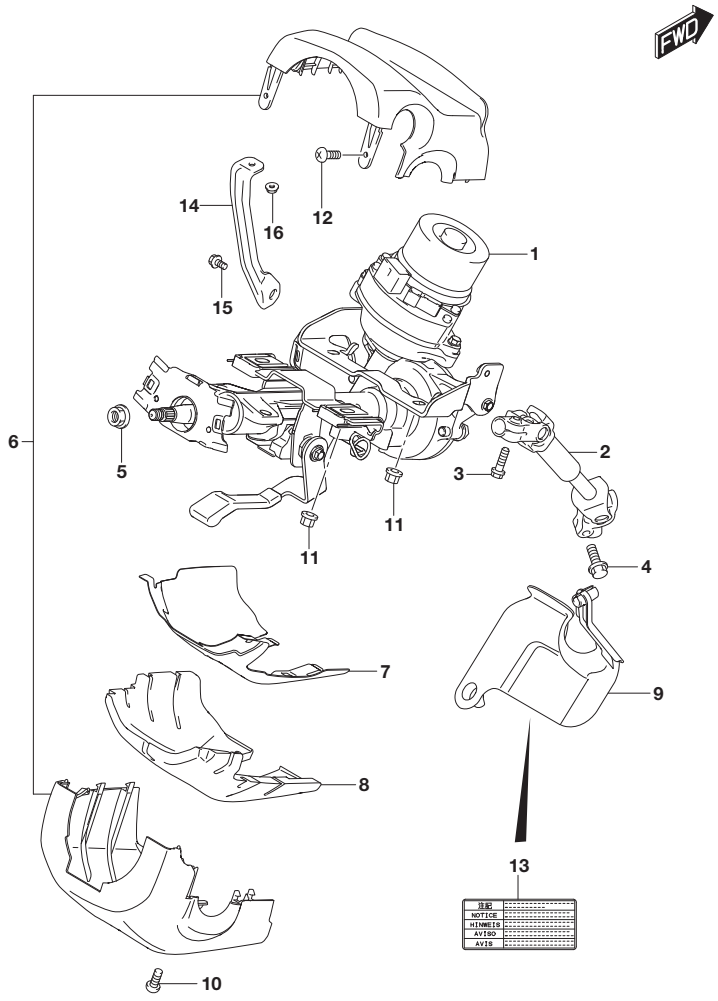

FIG.453C (3-C-10) STEERING COLUMN (RHD:N/PUSH START)

REF NO.	PART NO.	DESCRIPTION	Q'TY	REMARKS
1-1	48210-86RB1	E.P.S ASSY, STRG COL UPR	1	N/AEB CAMERA:(K10C,K14C)
1-2	48210-74SB0	E.P.S ASSY, STRG COL UPR	1	N/AEB CAMERA:K14D
1-3	48210-86R21	E.P.S ASSY, STRG COL UPR	1	W/AEB MONAURAL CAMERA: (K10C,K14C)
1-4	48210-74S20	E.P.S ASSY, STRG COL UPR	1	W/AEB MONAURAL CAMERA:K14D
2	48220-61M00	SHAFT ASSY, STEERING LOWER	1	
3	48218-61M00	PINCH BOLT	1	
4	09117-08106	BOLT (8X30)	1	
5	08316-1012A	NUT	1	
6	48400-61M20-5PK	COVER ASSY, STEERING COLUMN (BLACK)	1	
7	48431-61M00	PLATE, KNEE PROTECTOR	1	
8	48435-61M00	PAD, STRG COLUMN COVER	1	
9	48481-61M10	COVER, STEERING JOINT	1	
10	09136-05030	SCREW (5X12)	1	
11	09159-08135	NUT	4	
12	03211-0512B	SCREW	2	
13	79172-80G02	LABEL, STRG JOINT	1	
14	48251-54P00	REINF, STRG COLUMN	1	6AT:K14C
15	01550-0612A	BOLT	1	6AT:K14C
16	08316-1006A	NUT	1	6AT:K14C

FIG.453D

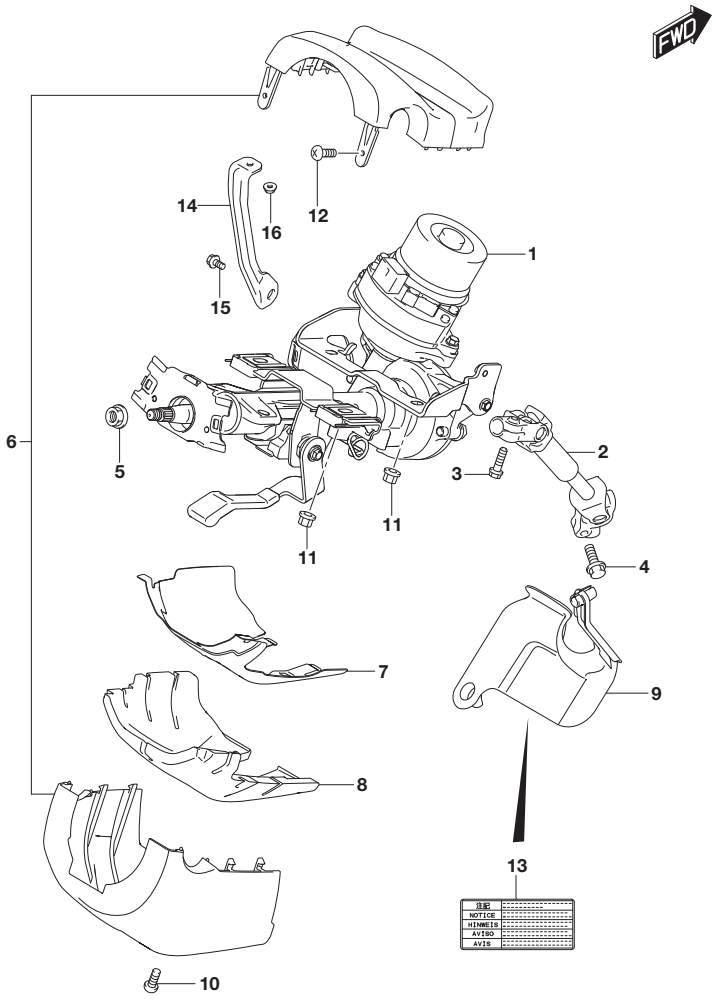

FIG.453D (3-C-11) STEERING COLUMN (RHD:W/PUSH START)

REF NO.	PART NO.	DESCRIPTION	Q'TY	REMARKS
1-1	48210-86R41	E.P.S ASSY, STRG COL UPR	1	K10C,K14C
1-2	48210-74S40	E.P.S ASSY, STRG COL UPR	1	K14D
2	48220-61M00	SHAFT ASSY, STEERING LOWER	1	
3	48218-61M00	PINCH BOLT	1	
4	09117-08106	BOLT (8X30)	1	
5	08316-1012A	NUT	1	
6	48400-61M10-5PK	COVER ASSY, STRG COLUMN (BLACK)	1	
7	48431-61M00	PLATE, KNEE PROTECTOR	1	
8	48435-61M00	PAD, STRG COLUMN COVER	1	
9	48481-61M10	COVER, STEERING JOINT	1	
10	09136-05030	SCREW (5X12)	1	
11	09159-08135	NUT	4	
12	03211-0512B	SCREW	2	
13	79172-80G02	LABEL, STRG JOINT	1	
14	48251-54P00	REINF, STRG COLUMN	1	6AT:K14C
15	01550-0612A	BOLT	1	6AT:K14C
16	08316-1006A	NUT	1	6AT:K14C

FIG.480A

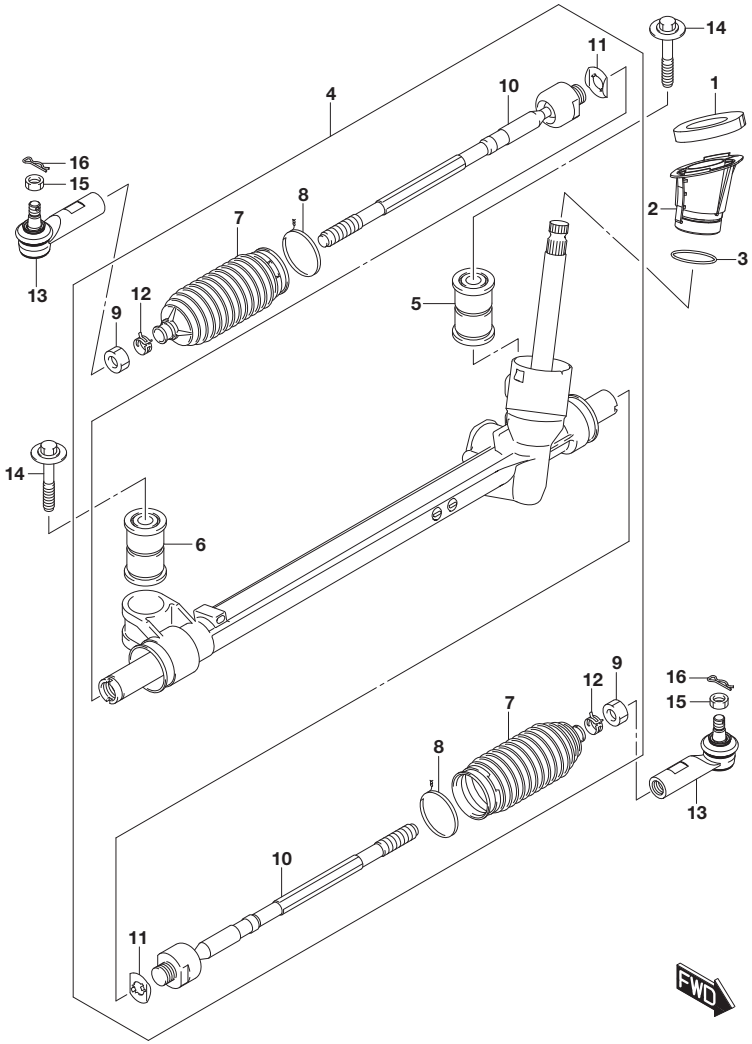

FIG.480A (3-C-12) STEERING UNIT (LHD)

REF NO.	PART NO.	DESCRIPTION	Q'TY	REMARKS
1	48451-54P00	PACKING, STRG GEAR	1	
2	48452-61M50	COVER, STRG GEAR	1	
3	09280-46002	O RING (D:2.4,ID:46.0)	1	
4	48580-54P51	BOX ASSY, STRG GEAR	1	
5	48525-61M00	.BUSH, STRG PINION SIDE	1	
6	48525-61M50	.BUSH, STRG RACK SIDE	1	
7	48571-68L00	.BOOT, STRG	2	
8	48575-68L00	.WIRE, STRG	2	
9	48817-68L00	.NUT, TIE-ROD END LOCK	2	
10	48830-61M00	.TIE-ROD, STRG	2	
11	48841-68L00	.WASHER, STRG TIE-ROD END	2	
12	48871-68L00	.CLIP, RACK BOOT	2	
13	48810-79J01	END, STRG TIE-ROD	2	
14	09116-12010	BOLT (12X77)	2	
15	09140-12039	NUT	2	
16	09385-12002	PIN	2	

FIG.480B

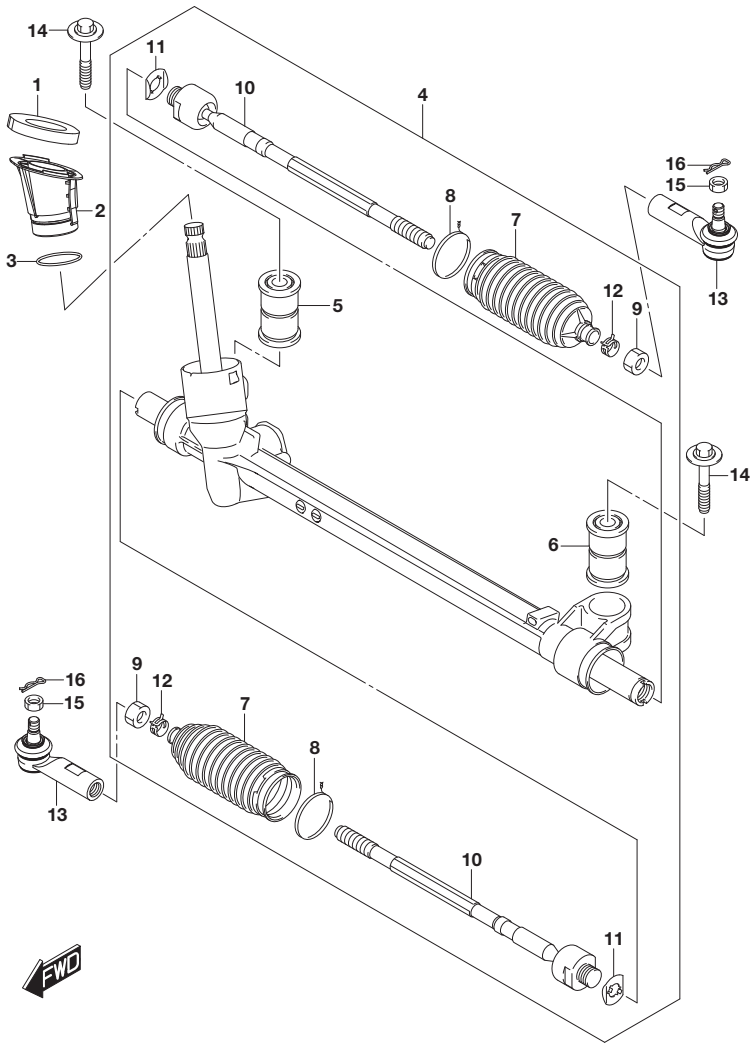

FIG.480B (3-C-13) STEERING UNIT (RHD)

REF NO.	PART NO.	DESCRIPTION	Q'TY	REMARKS
1	48451-54P00	PACKING, STRG GEAR	1	
2	48452-61M00	COVER, STEERING GEAR	1	
3	09280-46002	O RING (D:2.4,ID:46.0)	1	
4	48580-54P01	BOX ASSY, STRG GEAR	1	
5	48525-61M00	.BUSH, STRG PINION SIDE	1	
6	48525-61M50	.BUSH, STRG RACK SIDE	1	
7	48571-68L00	.BOOT, STRG	2	
8	48575-68L00	.WIRE, STRG	2	
9	48817-68L00	.NUT, TIE-ROD END LOCK	2	
10	48830-61M00	.TIE-ROD, STRG	2	
11	48841-68L00	.WASHER, STRG TIE-ROD END	2	
12	48871-68L00	.CLIP, RACK BOOT	2	
13	48810-79J01	END, STRG TIE-ROD	2	
14	09116-12010	BOLT (12X77)	2	
15	09140-12039	NUT	2	
16	09385-12002	PIN	2	

FIG.490A

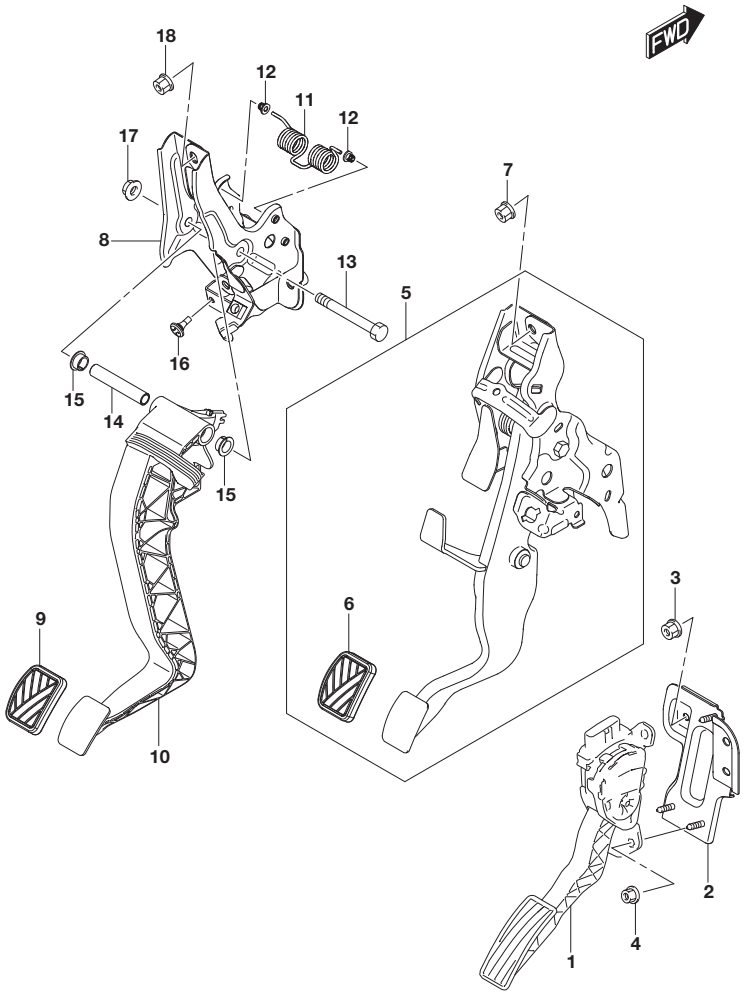

FIG.490A (3-C-14) PEDAL/PEDAL BRACKET (LHD:(5MT,6MT))

REF NO.	PART NO.	DESCRIPTION	Q'TY	REMARKS
1	49400-68L51	PEDAL ASSY, ACCELERATOR	1	
2	49511-61M50	BRACKET, ACCELERATOR PEDAL	1	
3	09159-08127	NUT	3	
4	08316-1006A	NUT	3	
5-1	49600-61M50	PEDAL ASSY, BRAKE	1	K10C,K14C
5-2	49600-54P50	PEDAL ASSY, BRAKE	1	K14D
6	49751-58J00	.PAD, PEDAL	1	
7	09159-08127	NUT	1	
8	49720-61M50	BRACKET, CLUTCH PEDAL	1	
9	49751-58J00	PAD, PEDAL	1	
10	49812-61M50	ARM, CLUTCH PEDAL	1	
11	49891-61M10	SPRING, CLUTCH PEDAL	1	
12	49894-61M00	BUSH, SPRING	2	
13	09100-10226	BOLT (10X85)	1	
14	09180-10121	SPACER (10.1X13X73.8)	1	
15	09307-13005	BUSH (13X21X8)	2	
16	09321-06026	CUSHION	1	
17	08316-1010A	NUT	1	
18	09159-08127	NUT	1	

FIG.490B(3-D-2) PEDAL/PEDAL BRACKET (LHD:6AT)
FIG.490C(3-D-3) PEDAL/PEDAL BRACKET (RHD:(5MT,6MT))
FIG.490D(3-D-4) PEDAL/PEDAL BRACKET (RHD:6AT)

FIG.490B

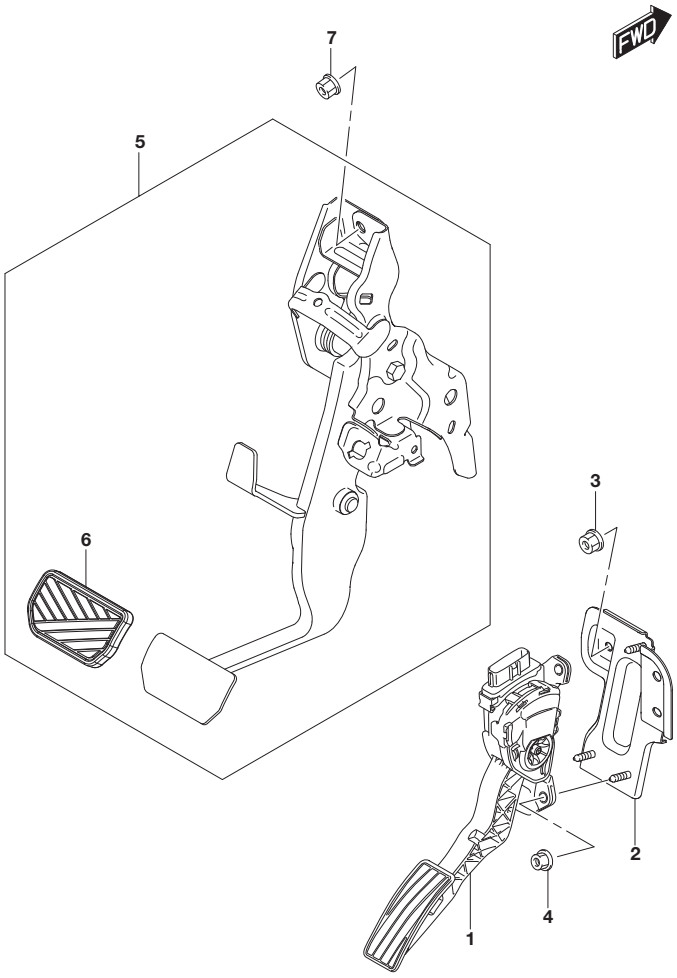

FIG.490B (3-D-2) PEDAL/PEDAL BRACKET (LHD:6AT)

REF NO.	PART NO.	DESCRIPTION	Q'TY	REMARKS
1	49400-68L51	PEDAL ASSY, ACCELERATOR	1	
2	49511-61M50	BRACKET, ACCELERATOR PEDAL	1	
3	09159-08127	NUT	3	
4	08316-1006A	NUT	3	
5	49600-61M60	PEDAL ASSY, BRAKE	1	
6	49751-58J10	.PAD, PEDAL	1	
7	09159-08127	NUT	1	

FIG.490C

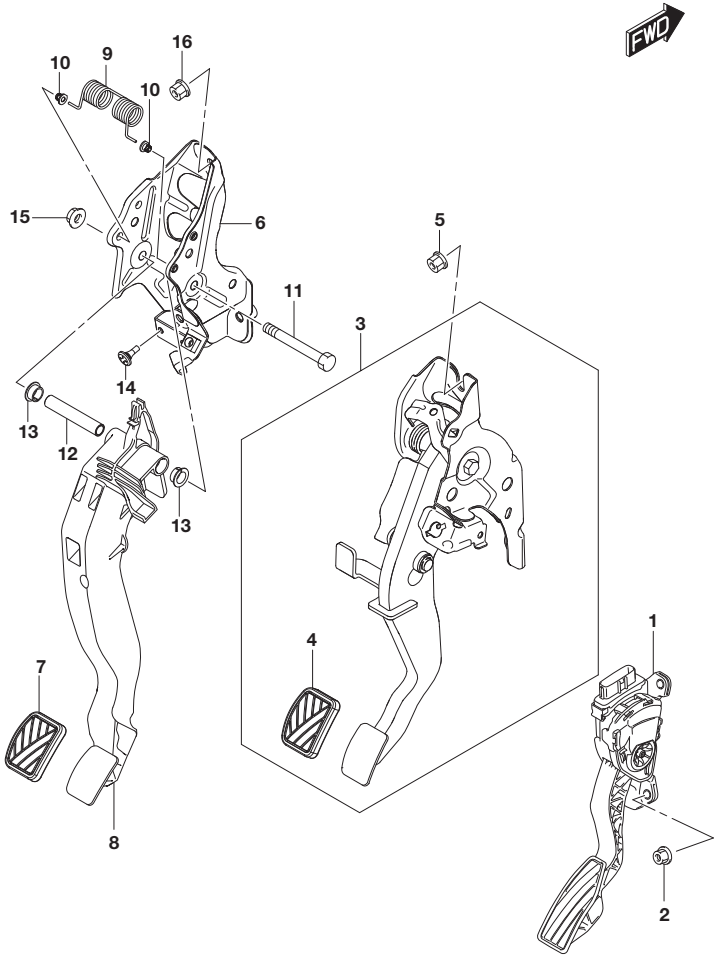

FIG.490C (3-D-3) PEDAL/PEDAL BRACKET (RHD:(5MT,6MT))

REF NO.	PART NO.	DESCRIPTION	Q'TY	REMARKS
1	49400-68L01	PEDAL ASSY, ACCELERATOR	1	
2	08316-1006A	NUT	3	
3-1	49600-61M00	PEDAL ASSY, BRAKE	1	K10C,K14C
3-2	49600-54P00	PEDAL ASSY, BRAKE	1	K14D
4	49751-58J00	.PAD, PEDAL	1	
5	09159-08127	NUT	1	
6	49720-61M00	BRACKET, CLUTCH PEDAL	1	
7	49751-58J00	PAD, PEDAL	1	
8	49812-61M00	ARM, CLUTCH PEDAL	1	
9	49891-61M10	SPRING, CLUTCH PEDAL	1	
10	49894-61M00	BUSH, SPRING	2	
11	09100-10226	BOLT (10X85)	1	
12	09180-10121	SPACER (10.1X13X73.8)	1	
13	09307-13005	BUSH (13X21X8)	2	
14	09321-06026	CUSHION	1	
15	08316-1010A	NUT	1	
16	09159-08127	NUT	1	

FIG.490D

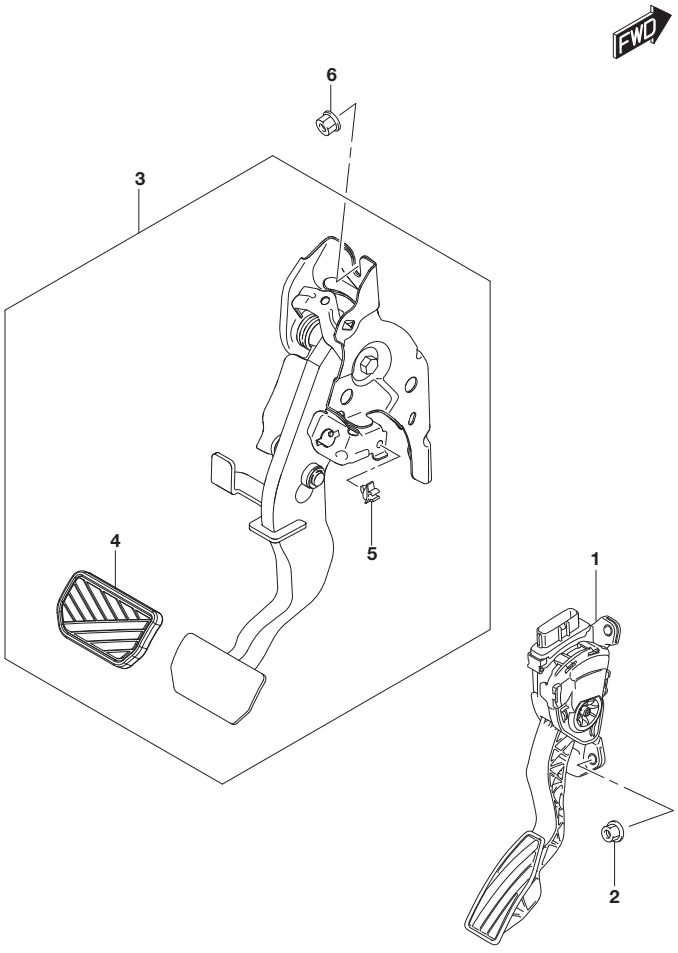

FIG.490D (3-D-4) PEDAL/PEDAL BRACKET (RHD:6AT)

REF NO.	PART NO.	DESCRIPTION	Q'TY	REMARKS
1	49400-68L01	PEDAL ASSY, ACCELERATOR	1	
2	08316-1006A	NUT	3	
3	49600-61M10	PEDAL ASSY, BRAKE	1	
4	49751-58J10	.PAD, PEDAL	1	
5	75411-76G00	.CLAMP, CABLE	1	
6	09159-08127	NUT	1	

FIG.500A

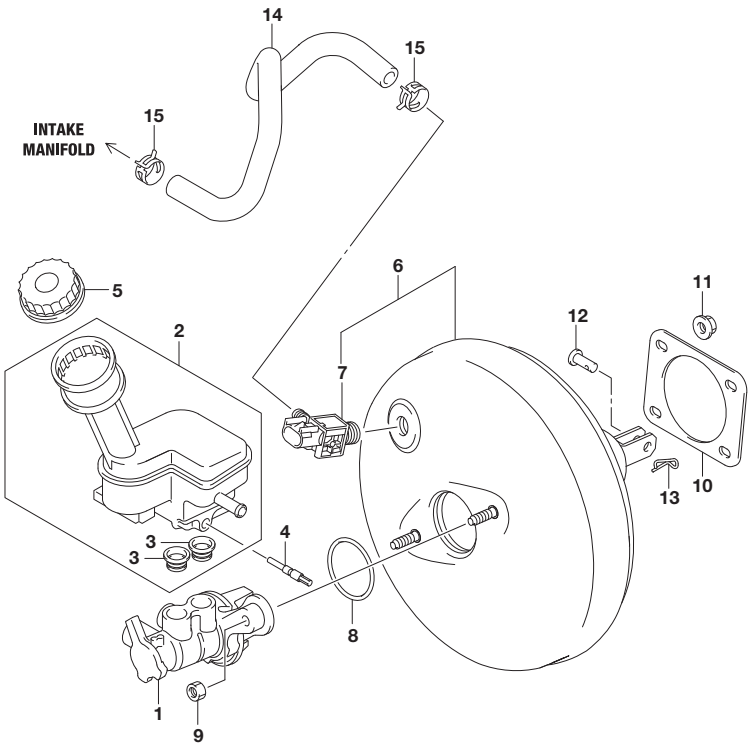

FIG.500A (3-D-5) BRAKE MASTER CYLINDER (LHD:(K10C,K14C))

REF NO.	PART NO.	DESCRIPTION	Q'TY	REMARKS
1	51100-54P21	CYLINDER ASSY, BRAKE MASTER	1	
2	51200-54P20	RESERVOIR ASSY, MASTER CYL	1	
3	51232-62J00	.GROMMET, RSVR CONNECTOR	2	
4	51233-54P00	SCREW	1	
5	51290-54P00	CAP SET, RESERVOIR	1	
6	51300-61M02	BOOSTER ASSY, BRAKE MASTER	1	
7	51280-61M00	.SENSOR, VACUUM	1	
8	51311-62J00	O RING	1	
9	51313-62J00	NUT	2	
10	51132-82003	PACKING, BRAKE MASTER CYLINDER	1	
11	09159-08127	NUT	4	
12	09200-08048	PIN (8X20)	1	
13	09385-08007	PIN (L:21)	1	
14-1	51011-64R01	HOSE, BRAKE VACUUM PUMP	1	K10C
14-2	51011-54P20	HOSE, BRAKE VACUUM PUMP	1	K14C
15	09401-15L02	CLIP	2	

FIG.500B(3-D-6) BRAKE MASTER CYLINDER (LHD:K14D)
FIG.500C(3-D-7) BRAKE MASTER CYLINDER (RHD:(K10C,K14C))
FIG.500D(3-D-8) BRAKE MASTER CYLINDER (RHD:K14D)

FIG.500B

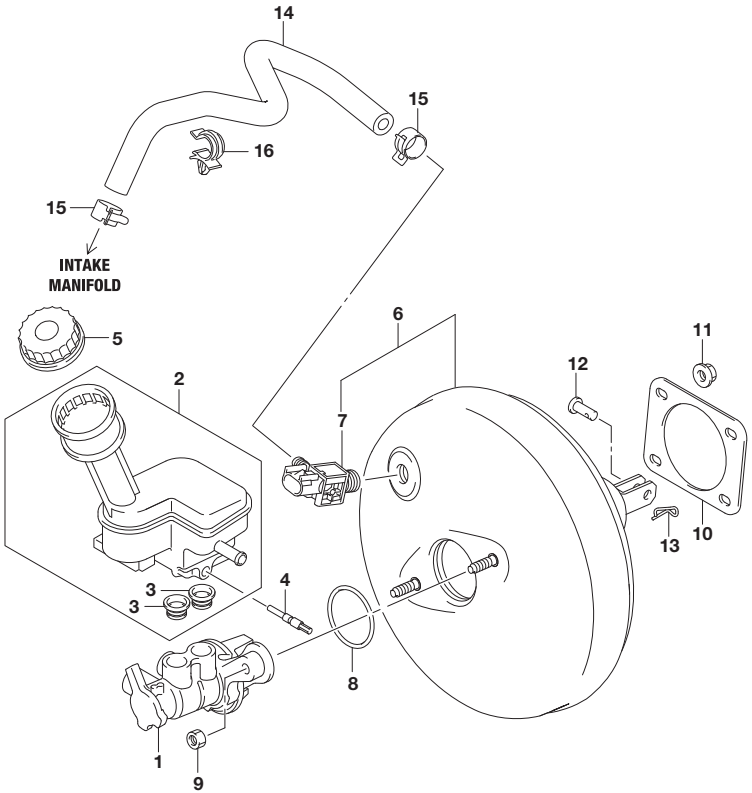

FIG.500B (3-D-6) BRAKE MASTER CYLINDER (LHD:K14D)

REF NO.	PART NO.	DESCRIPTION	Q'TY	REMARKS
1	51100-54P21	CYLINDER ASSY, BRAKE MASTER	1	
2	51200-54P20	RESERVOIR ASSY, MASTER CYL	1	
3	51232-62J00	.GROMMET, RSVR CONNECTOR	2	
4	51233-54P00	SCREW	1	
5	51290-54P00	CAP SET, RESERVOIR	1	
6	51300-61M02	BOOSTER ASSY, BRAKE MASTER	1	
7	51280-61M00	.SENSOR, VACUUM	1	
8	51311-62J00	O RING	1	
9	51313-62J00	NUT	2	
10	51132-82003	PACKING, BRAKE MASTER CYLINDER	1	
11	09159-08127	NUT	4	
12	09200-08048	PIN (8X20)	1	
13	09385-08007	PIN (L:21)	1	
14	51010-74S00	HOSE, BRAKE VACUUM PUMP	1	
15	09401-15L02	CLIP	2	
16	09403-16307	CLAMP	1	

FIG.500C

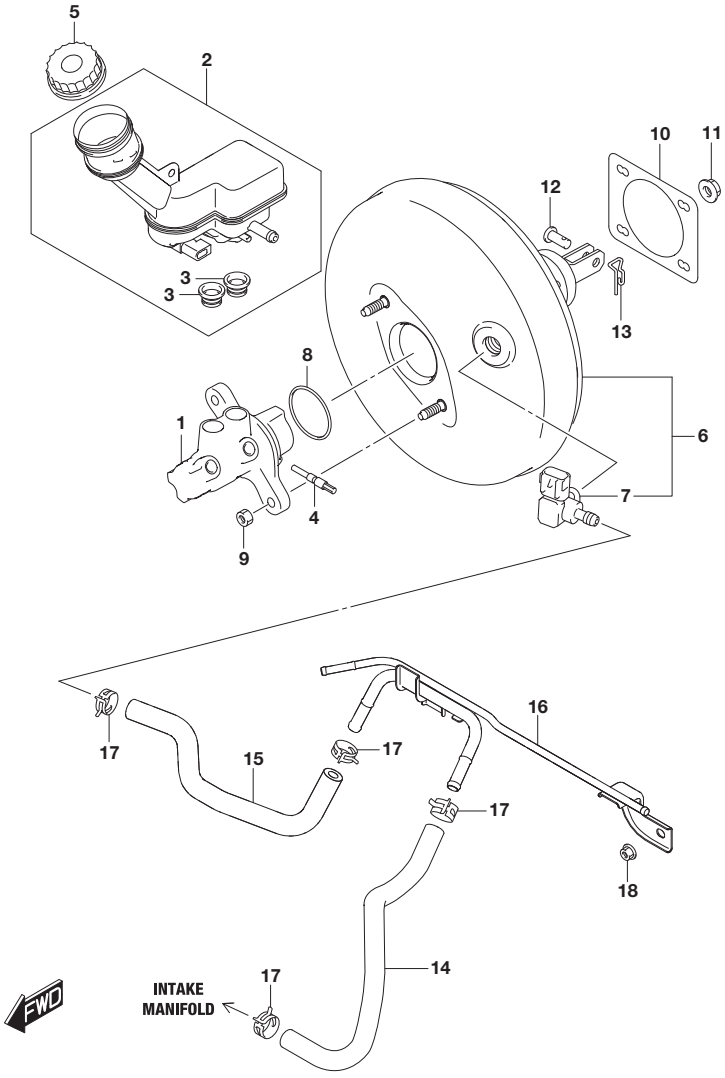

FIG.500C (3-D-7) BRAKE MASTER CYLINDER (RHD:(K10C,K14C))

REF NO.	PART NO.	DESCRIPTION	Q'TY	REMARKS
1	51100-54P61	CYLINDER ASSY, BRAKE MASTER	1	
2	51200-54P60	RESERVOIR ASSY, MASTER CYL	1	
3	51232-62J00	.GROMMET, RSVR CONNECTOR	2	
4	51233-54P00	SCREW	1	
5	51290-54P00	CAP SET, RESERVOIR	1	
6	51300-61M42	BOOSTER ASSY, BRAKE MASTER	1	
7	51280-61M50	.SENSOR, VACUUM	1	
8	51311-62J00	O RING	1	
9	51313-62J00	NUT	2	
10	51132-82003	PACKING, BRAKE MASTER CYLINDER	1	
11	09159-08127	NUT	4	
12	09200-08048	PIN (8X20)	1	
13	09385-08007	PIN (L:21)	1	
14-1	51011-64R50	HOSE, BRAKE VACUUM PUMP	1	K10C
14-2	51011-54P00	HOSE, BRAKE VACUUM PUMP	1	K14C
15	51021-61M00	HOSE, VACUUM BSTR TO PIPE	1	
16	51050-61M00	PIPE, VACUUM & EVAP	1	
17	09401-15L02	CLIP	4	
18	09159-06076	NUT	2	

APK414-3 P22 500C
BRAKE MASTER CYLINDER (3)

FIG.500D

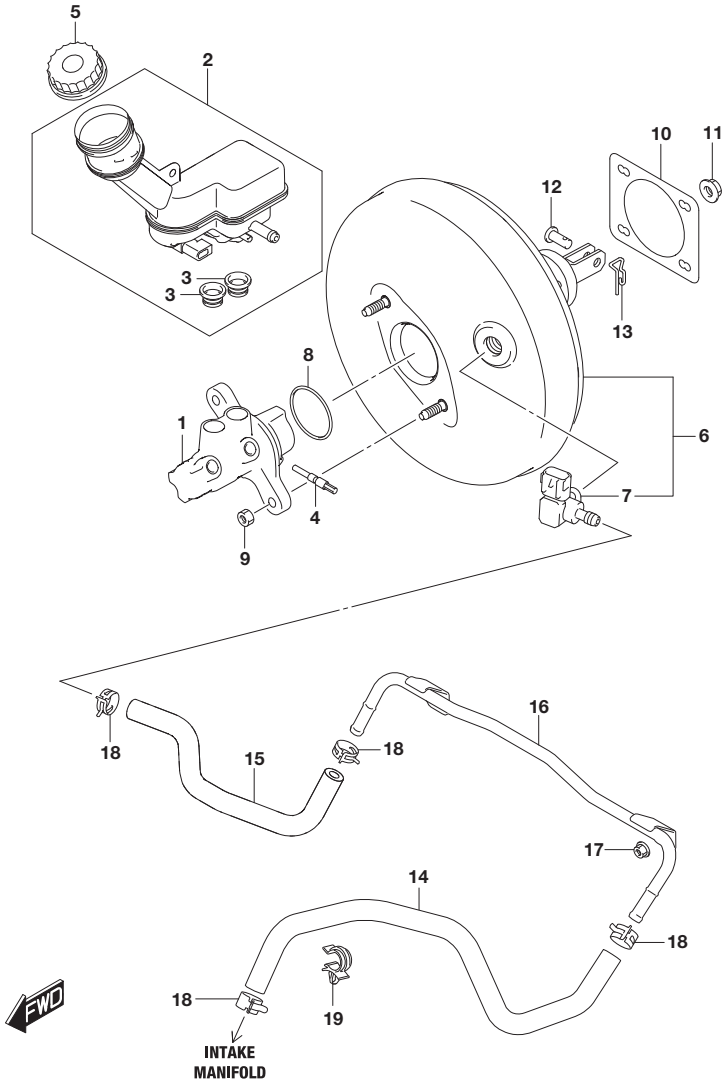

FIG.500D (3-D-8) BRAKE MASTER CYLINDER (RHD:K14D)

REF NO.	PART NO.	DESCRIPTION	Q'TY	REMARKS
1	51100-54P61	CYLINDER ASSY, BRAKE MASTER	1	
2	51200-54P60	RESERVOIR ASSY, MASTER CYL	1	
3	51232-62J00	.GROMMET, RSVR CONNECTOR	2	
4	51233-54P00	SCREW	1	
5	51290-54P00	CAP SET, RESERVOIR	1	
6	51300-61M42	BOOSTER ASSY, BRAKE MASTER	1	
7	51280-61M50	.SENSOR, VACUUM	1	
8	51311-62J00	O RING	1	
9	51313-62J00	NUT	2	
10	51132-82003	PACKING, BRAKE MASTER CYLINDER	1	
11	09159-08127	NUT	4	
12	09200-08048	PIN (8X20)	1	
13	09385-08007	PIN (L:21)	1	
14	51010-74S50	HOSE, VACUUM PIPE TO PUMP	1	
15	51021-61M00	HOSE, VACUUM BSTR TO PIPE	1	
16	51870-74S00	PIPE, BRAKE VACUUM	1	
17	09159-06076	NUT	2	
18	09401-15L02	CLIP	4	
19	09403-16307	CLAMP	1	

FIG.503A

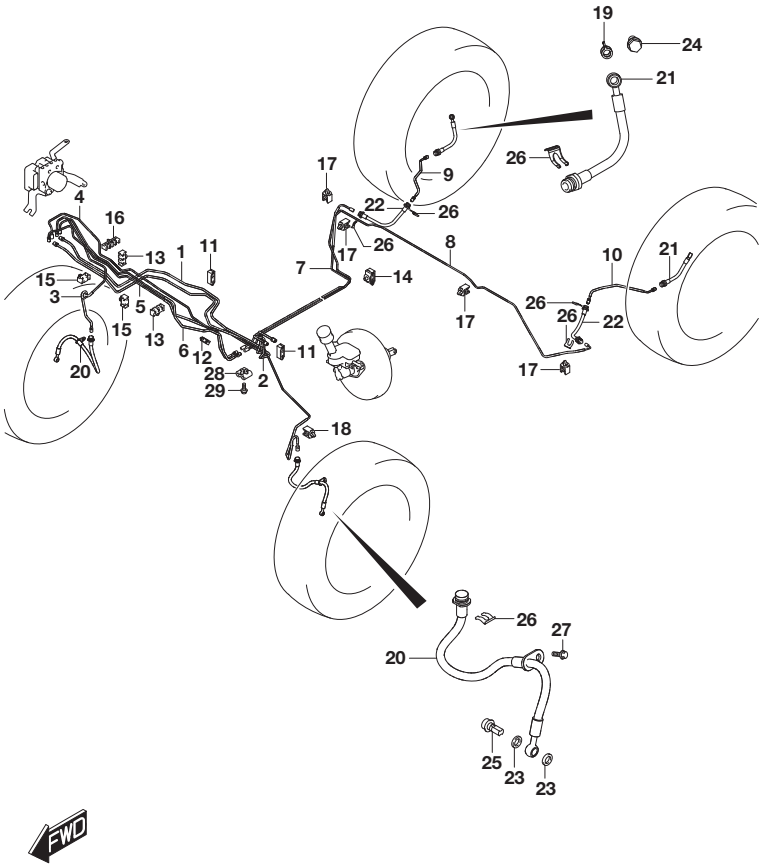

FIG.503A (3-D-9) BRAKE PIPING (LHD:(5MT,6MT))

REF NO.	PART NO.	DESCRIPTION	Q'TY	REMARKS
1	51410-86R00	PIPE, MA PRI TO HU	1	
2	51420-86R00	PIPE, MA SEC TO HU	1	
3	51430-61M01	PIPE, HU TO FR BK HOSE RH	1	
4	51440-61M01	PIPE, HU TO FR BK HOSE LH	1	
5	51450-61M01	PIPE, HU TO JOINT RH	1	
6	51460-61M01	PIPE, HU TO JOINT LH	1	
7-1	51470-54P01	PIPE, JOINT TO RR BK HOSE RH	1	K10C,K14C
7-2	51470-74S00	PIPE, JOINT TO RR BK HOSE RH	1	K14D
8-1	51480-54P11	PIPE, JOINT TO RR BK HOSE LH	1	K10C,K14C
8-2	51480-74S00	PIPE, JOINT TO RR BK HOSE LH	1	K14D
9	51510-61M01	PIPE, RR BK HOSE TO CLPR HOSE RH	1	
10	51520-61M01	PIPE, RR BK HOSE TO CLPR HOSE LH	1	
11	51751-61M00	CLAMP, BK PIPE DASH TRIPLE	2	
12	51751-61M10	CLAMP, BK PIPE DASH DOUBLE	1	
13	51761-61J30	CLAMP, BK PIPE DASH	2	
14-1	51761-61M00	CLAMP, BK PIPE RR FL DOUBLE	1	K10C,K14C
14-2	51761-57T00	CLAMP, BK PIPE RR FL DOUBLE	1	K14D
15	51761-62J20	CLAMP, BK PIPE 2 ON FRAME	2	
16	51761-68H40	CLAMP, BK PIPE	1	
17	51761-79J00	CLAMP, BK PIPE SIDE MEMBER	4	
18	51761-79J00	CLAMP, BK PIPE SIDE MEMBER	1	
19	51543-65J01	GASKET, FLEXIBLE HOSE	2	
20	51550-61M01	HOSE, FR BK FLEX	2	
21	51570-61M51	HOSE, RR DISC FLEX	2	
22	51570-61M00	HOSE, RR BK FLEX	2	
23	09161-10009	WASHER (10X15X1.5)	4	
24	09360-10026	UNION (10X1.0X23)	2	
25	09360-10046	UNION (10X1.0X23)	2	

FIG.503B(3-D-11) BRAKE PIPING (LHD:6AT)
FIG.503C(3-D-12) BRAKE PIPING (RHD:(5MT,6MT))
FIG.503D(3-D-13) BRAKE PIPING (RHD:6AT)

FIG.503A

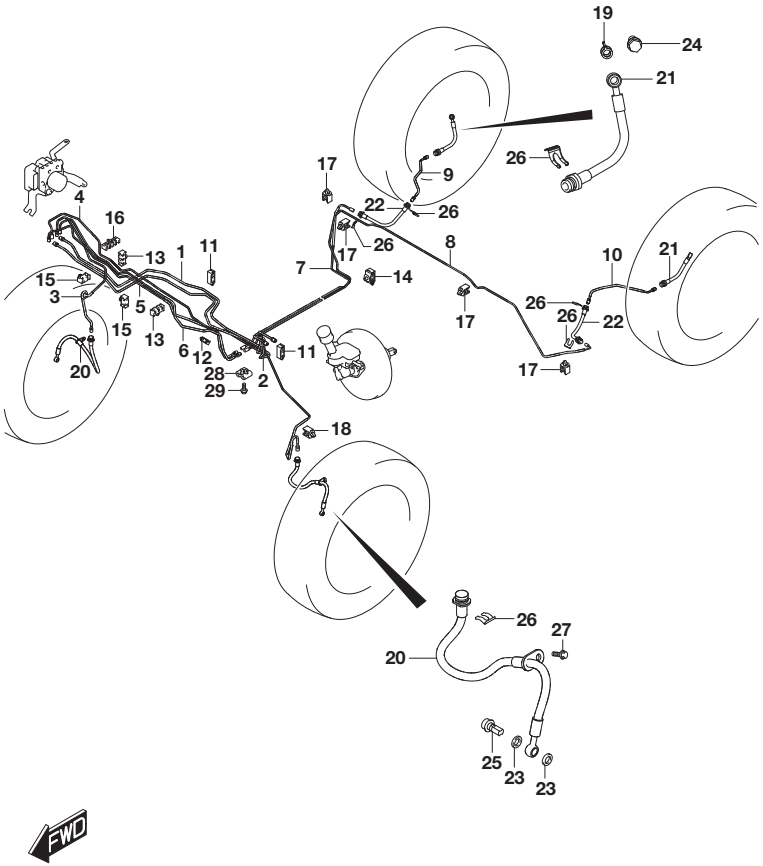

FIG.503A (3-D-10) BRAKE PIPING (LHD:(5MT,6MT))

REF NO.	PART NO.	DESCRIPTION	Q'TY	REMARKS
26	09383-13003	E-RING	8	
27	01551-0816C	BOLT	2	
28	51630-82040	JOINT, 4WAY BRAKE	1	
29	02162-0625A	SCREW	1	

FIG.503B

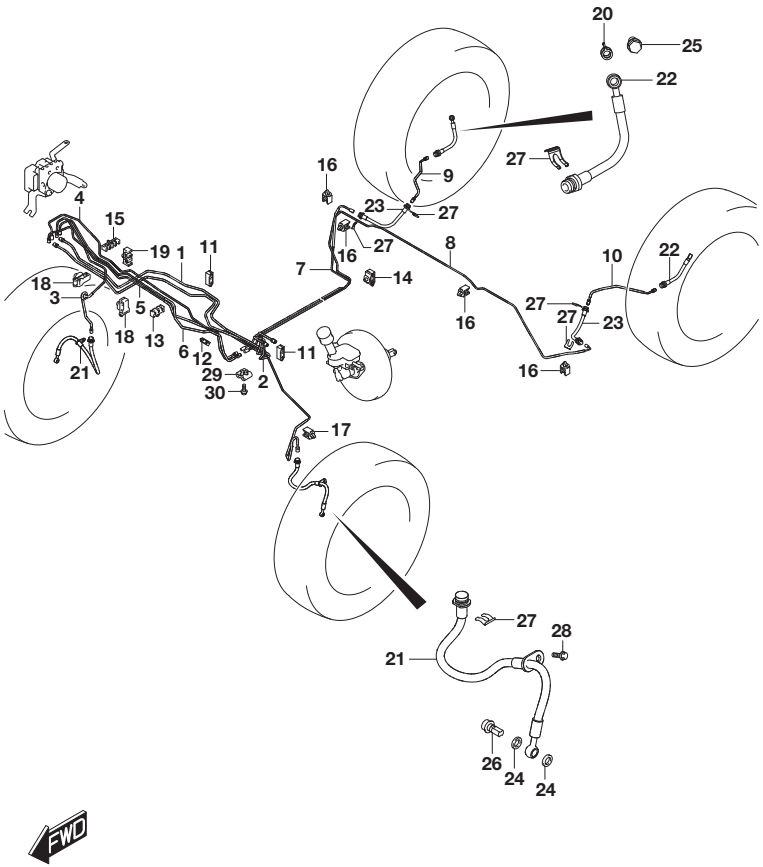

FIG.503B (3-D-11) BRAKE PIPING (LHD:6AT)

REF NO.	PART NO.	DESCRIPTION	Q'TY	REMARKS
1	51410-86R00	PIPE, MA PRI TO HU	1	
2	51420-86R00	PIPE, MA SEC TO HU	1	
3	51430-61M01	PIPE, HU TO FR BK HOSE RH	1	
4	51440-61M01	PIPE, HU TO FR BK HOSE LH	1	
5	51450-61M01	PIPE, HU TO JOINT RH	1	
6	51460-61M01	PIPE, HU TO JOINT LH	1	
7	51470-54P01	PIPE, JOINT TO RR BK HOSE RH	1	
8	51480-54P11	PIPE, JOINT TO RR BK HOSE LH	1	
9	51510-61M01	PIPE, RR BK HOSE TO CLPR HOSE RH	1	
10	51520-61M01	PIPE, RR BK HOSE TO CLPR HOSE LH	1	
11	51751-61M00	CLAMP, BK PIPE DASH TRIPLE	2	
12	51751-61M10	CLAMP, BK PIPE DASH DOUBLE	1	
13	51761-61J30	CLAMP, BK PIPE DASH	1	
14	51761-61M00	CLAMP, BK PIPE RR FL DOUBLE	1	
15	51761-68H40	CLAMP, BK PIPE	1	
16	51761-79J00	CLAMP, BK PIPE SIDE MEMBER	4	
17	51761-79J00	CLAMP, BK PIPE SIDE MEMBER	1	
18	51761-86R00	CLAMP, BK PIPE STRUT DOUBLE	2	
19	51761-86R10	CLAMP, BK PIPE STRUT DOUBLE	1	
20	51543-65J01	GASKET, FLEXIBLE HOSE	2	
21	51550-61M01	HOSE, FR BK FLEX	2	
22	51570-61M51	HOSE, RR DISC FLEX	2	
23	51570-61M00	HOSE, RR BK FLEX	2	
24	09161-10009	WASHER (10X15X1.5)	4	
25	09360-10026	UNION (10X1.0X23)	2	
26	09360-10046	UNION (10X1.0X23)	2	
27	09383-13003	E-RING	8	
28	01551-0816C	BOLT	2	
29	51630-82040	JOINT, 4WAY BRAKE	1	
30	02162-0625A	SCREW	1	

FIG.503C

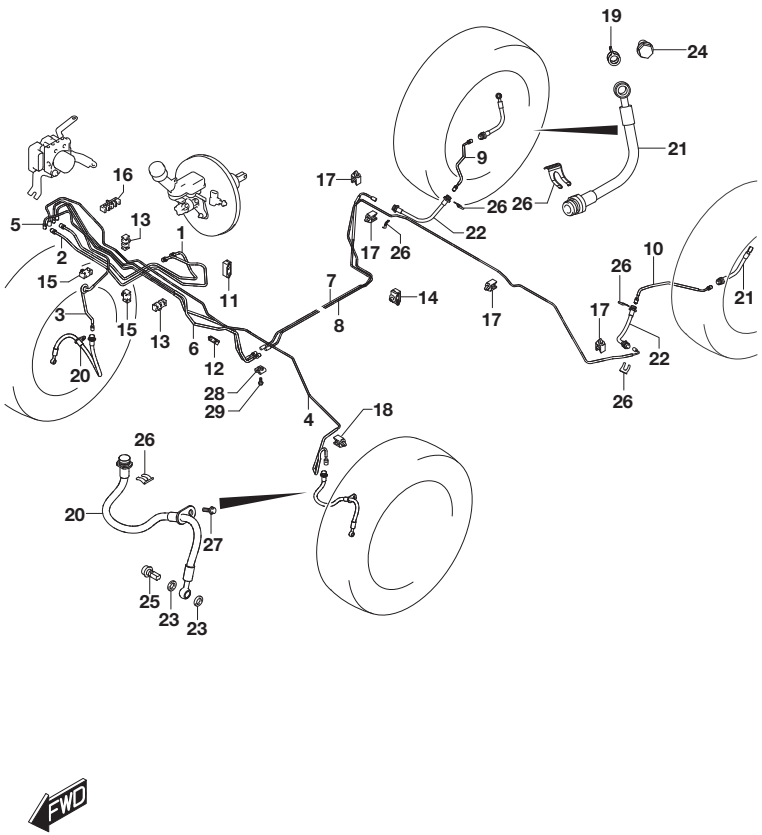

FIG.503C (3-D-12) BRAKE PIPING (RHD:(5MT,6MT))

REF NO.	PART NO.	DESCRIPTION	Q'TY	REMARKS
1	51410-86R20	PIPE, MA PRI TO HU	1	
2	51420-86R20	PIPE, MA SEC TO HU	1	
3	51430-61M01	PIPE, HU TO FR BK HOSE RH	1	
4	51440-61M01	PIPE, HU TO FR BK HOSE LH	1	
5	51450-61M01	PIPE, HU TO JOINT RH	1	
6	51460-61M01	PIPE, HU TO JOINT LH	1	
7-1	51470-54P01	PIPE, JOINT TO RR BK HOSE RH	1	K10C,K14C
7-2	51470-74S00	PIPE, JOINT TO RR BK HOSE RH	1	K14D
8-1	51480-54P11	PIPE, JOINT TO RR BK HOSE LH	1	K10C,K14C
8-2	51480-74S00	PIPE, JOINT TO RR BK HOSE LH	1	K14D
9	51510-61M01	PIPE, RR BK HOSE TO CLPR HOSE RH	1	
10	51520-61M01	PIPE, RR BK HOSE TO CLPR HOSE LH	1	
11	51751-61M00	CLAMP, BK PIPE DASH TRIPLE	1	
12	51751-61M10	CLAMP, BK PIPE DASH DOUBLE	1	
13	51761-61J30	CLAMP, BK PIPE DASH	2	
14-1	51761-61M00	CLAMP, BK PIPE RR FL DOUBLE	1	K10C,K14C
14-2	51761-57T00	CLAMP, BK PIPE RR FL DOUBLE	1	K14D
15	51761-62J20	CLAMP, BK PIPE 2 ON FRAME	2	
16	51761-68H40	CLAMP, BK PIPE	1	
17	51761-79J00	CLAMP, BK PIPE SIDE MEMBER	4	
18	51761-79J00	CLAMP, BK PIPE SIDE MEMBER	1	
19	51543-65J01	GASKET, FLEXIBLE HOSE	2	
20	51550-61M01	HOSE, FR BK FLEX	2	
21	51570-61M51	HOSE, RR DISC FLEX	2	
22	51570-61M00	HOSE, RR BK FLEX	2	
23	09161-10009	WASHER (10X15X1.5)	4	
24	09360-10026	UNION (10X1.0X23)	2	
25	09360-10046	UNION (10X1.0X23)	2	
26	09383-13003	E-RING	8	
27	01551-0816C	BOLT	2	
28	51630-82040	JOINT, 4WAY BRAKE	1	
29	02162-0625A	SCREW	1	

FIG.503D

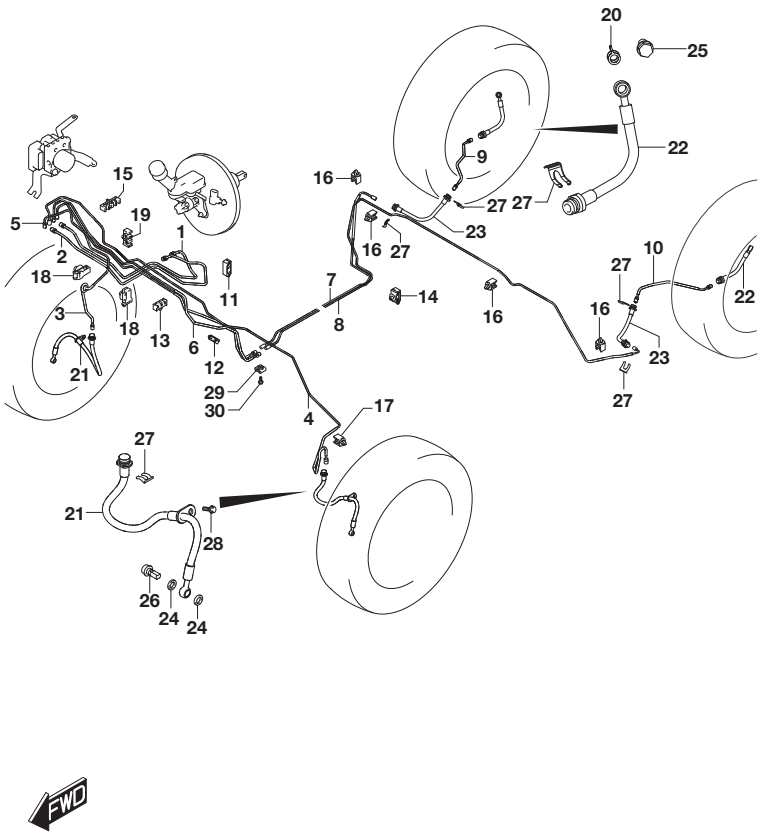

FIG.503D (3-D-13) BRAKE PIPING (RHD:6AT)

REF NO.	PART NO.	DESCRIPTION	Q'TY	REMARKS
1	51410-86R20	PIPE, MA PRI TO HU	1	
2	51420-86R20	PIPE, MA SEC TO HU	1	
3	51430-61M01	PIPE, HU TO FR BK HOSE RH	1	
4	51440-61M01	PIPE, HU TO FR BK HOSE LH	1	
5	51450-61M01	PIPE, HU TO JOINT RH	1	
6	51460-61M01	PIPE, HU TO JOINT LH	1	
7	51470-54P01	PIPE, JOINT TO RR BK HOSE RH	1	
8	51480-54P11	PIPE, JOINT TO RR BK HOSE LH	1	
9	51510-61M01	PIPE, RR BK HOSE TO CLPR HOSE RH	1	
10	51520-61M01	PIPE, RR BK HOSE TO CLPR HOSE LH	1	
11	51751-61M00	CLAMP, BK PIPE DASH TRIPLE	1	
12	51751-61M10	CLAMP, BK PIPE DASH DOUBLE	1	
13	51761-61J30	CLAMP, BK PIPE DASH	1	
14	51761-61M00	CLAMP, BK PIPE RR FL DOUBLE	1	
15	51761-68H40	CLAMP, BK PIPE	1	
16	51761-79J00	CLAMP, BK PIPE SIDE MEMBER	4	
17	51761-79J00	CLAMP, BK PIPE SIDE MEMBER	1	
18	51761-86R00	CLAMP, BK PIPE STRUT DOUBLE	2	
19	51761-86R10	CLAMP, BK PIPE STRUT DOUBLE	1	
20	51543-65J01	GASKET, FLEXIBLE HOSE	2	
21	51550-61M01	HOSE, FR BK FLEX	2	
22	51570-61M51	HOSE, RR DISC FLEX	2	
23	51570-61M00	HOSE, RR BK FLEX	2	
24	09161-10009	WASHER (10X15X1.5)	4	
25	09360-10026	UNION (10X1.0X23)	2	
26	09360-10046	UNION (10X1.0X23)	2	
27	09383-13003	E-RING	8	
28	01551-0816C	BOLT	2	
29	51630-82040	JOINT, 4WAY BRAKE	1	
30	02162-0625A	SCREW	1	

FIG.510A

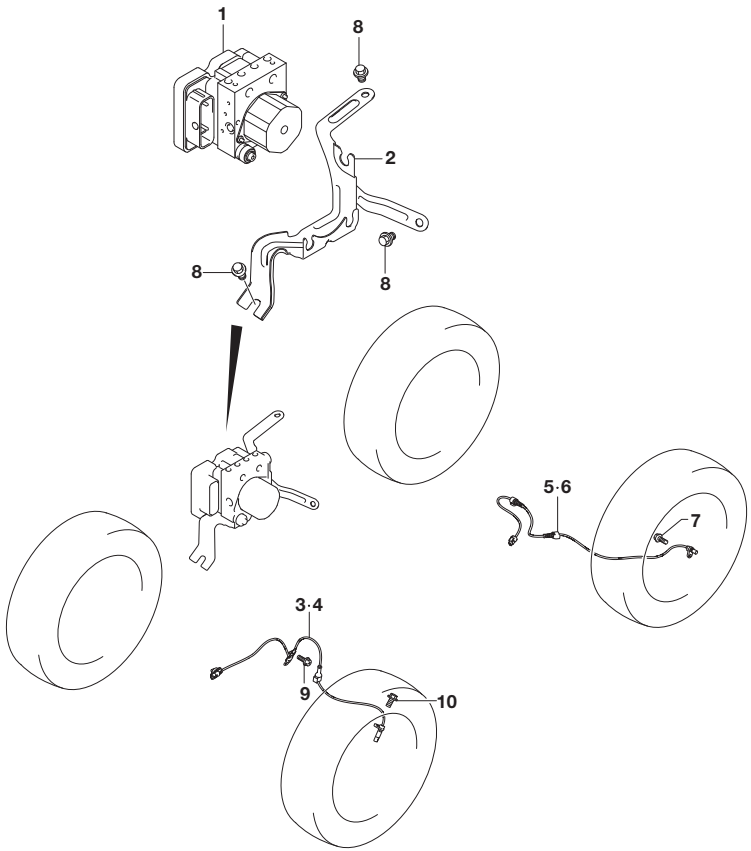

FIG.510A (3-D-14) ANTI LOCK BRAKE SYSTEM (2WD)

REF NO.	PART NO.	DESCRIPTION	Q'TY	REMARKS
1-1	56130-86RQ0	ACTUATOR ASSY, ESP	1	K10C:5MT:N/AEB CAMERA
1-2	56130-86R60	ACTUATOR ASSY, ESP	1	K10C:5MT:W/AEB MONAURAL CAMERA
1-3	56130-86RR0	ACTUATOR ASSY, ESP	1	K10C:6AT:N/AEB CAMERA
1-4	56130-86R70	ACTUATOR ASSY, ESP	1	K10C:6AT:W/AEB MONAURAL CAMERA
1-5	56130-86RL0	ACTUATOR ASSY, ESP	1	K14C:6MT:N/AEB CAMERA
1-6	56130-86R30	ACTUATOR ASSY, ESP	1	K14C:6MT:W/AEB MONAURAL CAMERA
1-7	56130-86RP0	ACTUATOR ASSY, ESP	1	K14C:6AT:N/AEB CAMERA
1-8	56130-86R50	ACTUATOR ASSY, ESP	1	K14C:6AT:W/AEB MONAURAL CAMERA
1-9	56130-74SA0	ACTUATOR ASSY, ESP	1	K14D:6MT:N/AEB CAMERA
1-10	56130-74S00	ACTUATOR ASSY, ESP	1	K14D:6MT:W/AEB MONAURAL CAMERA
2-1	56160-86R00	BRACKET, ACTUATOR	1	K10C,K14C
2-2	56160-74S00	BRACKET, ACTUATOR	1	K14D
3	56210-61M01	SENSOR, FR WHEEL RH	1	
4	56220-61M01	SENSOR, FR WHEEL LH	1	
5	56310-61M00	SENSOR, RR WHEEL RH	1	
6	56320-61M00	SENSOR, RR WHEEL LH	1	
7	01550-0612A	BOLT	2	
8	01551-0812A	BOLT	3	
9	02162-0612A	SCREW	2	
10	02162-0616A	SCREW	2	

FIG.510B

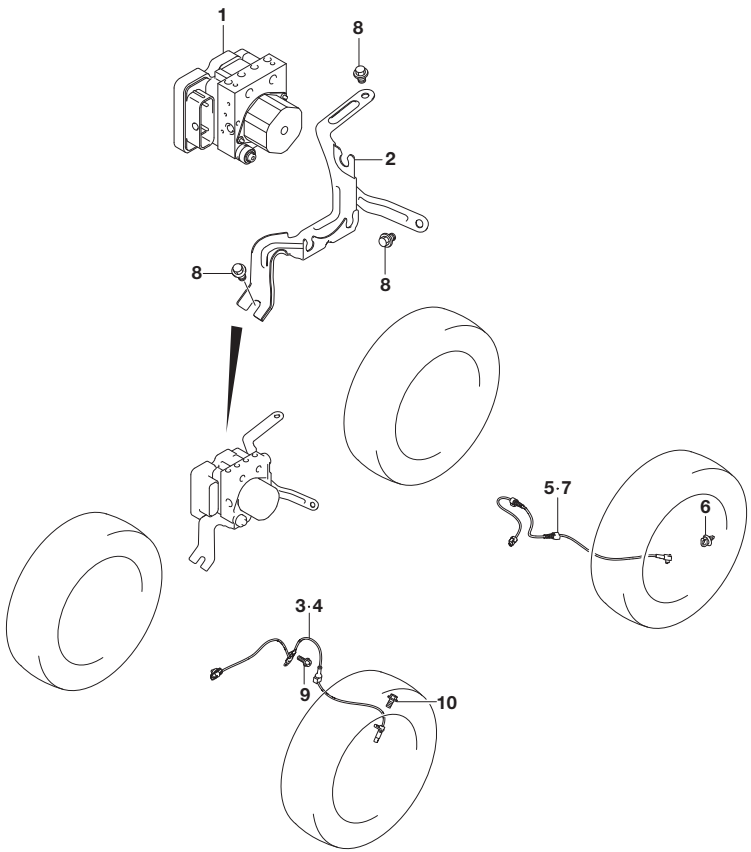

FIG.510B (3-E-2) ANTI LOCK BRAKE SYSTEM (4WD)

REF NO.	PART NO.	DESCRIPTION	Q'TY	REMARKS
1-1	56130-53SL0	ACTUATOR ASSY, ESP	1	K10C:5MT:N/AEB CAMERA
1-2	56130-53S80	ACTUATOR ASSY, ESP	1	K10C:5MT:W/AEB MONAURAL CAMERA
1-3	56130-53S90	ACTUATOR ASSY, ESP	1	K10C:6AT
1-4	56130-53S50	ACTUATOR ASSY, ESP	1	K14C:6MT
1-5	56130-53S70	ACTUATOR ASSY, ESP	1	K14C:6AT
1-6	56130-75S00	ACTUATOR ASSY, ESP	1	K14D
2-1	56160-86R00	BRACKET, ACTUATOR	1	K10C,K14C
2-2	56160-74S00	BRACKET, ACTUATOR	1	K14D
3	56210-61M01	SENSOR, FR WHEEL RH	1	
4	56220-61M01	SENSOR, FR WHEEL LH	1	
5	56315-61M00	HARNESS, RR WHEEL SENSOR RH	1	
6	56324-50E51	CLAMP, WHEEL SENSOR HARNESS	2	
7	56325-61M00	HARNESS, RR WHEEL SENSOR LH	1	
8	01551-0812A	BOLT	3	
9	02162-0612A	SCREW	2	
10	02162-0616A	SCREW	2	

FIG.520A

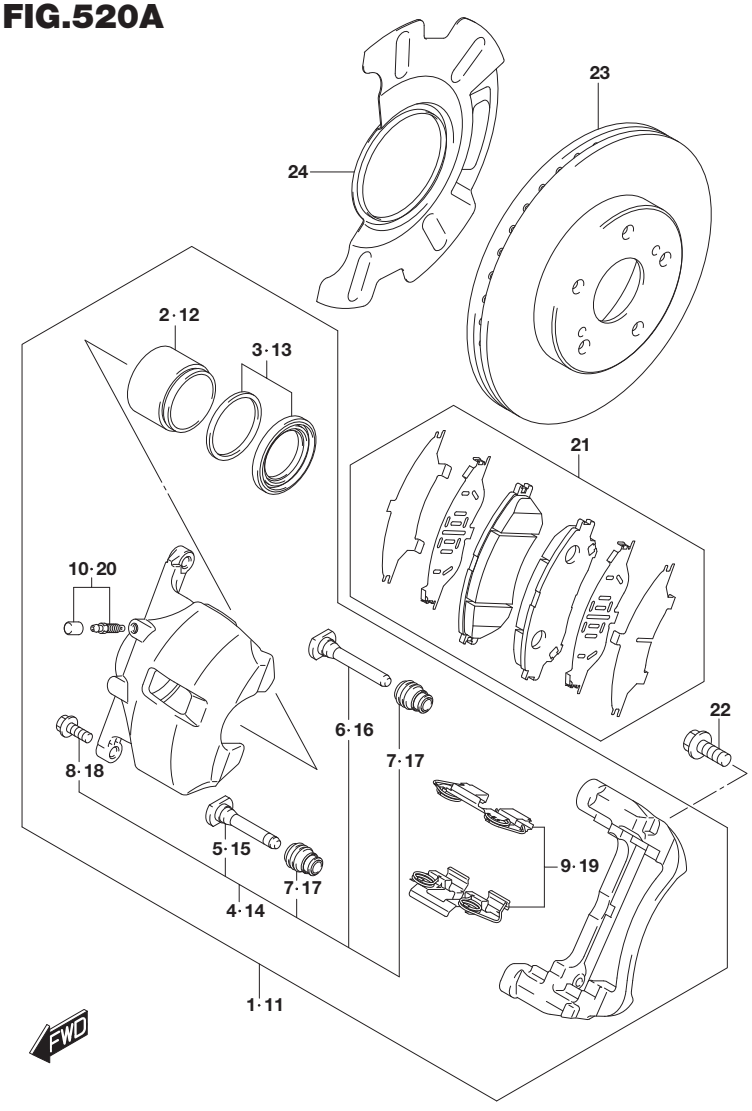

FIG.520A (3-E-3) FRONT WHEEL BRAKE

REF NO.	PART NO.	DESCRIPTION	Q'TY	REMARKS
1	55101-61M01-999	CALIPER ASSY, FR BRAKE RH	1	
2	55133-61M00	.PISTON	1	
3	55830-61M01	.SEAL SET	1	
4	55850-61M01	.PIN & BOOT SET	1	
5	55855-61M00	..LOCK PIN SET	1	
6	55856-61M00	..GUIDE PIN	1	
7	55857-61M00	..BOOT PIN	2	
8	55206-61M00	..BOLT PIN	2	
9	55860-61M02	.SPRING SET	1	
10	55870-61M00	.BLEEDER SET	1	
11	55102-61M01-999	CALIPER ASSY, FR BRAKE LH	1	
12	55133-61M00	.PISTON	1	
13	55830-61M01	.SEAL SET	1	
14	55850-61M01	.PIN & BOOT SET	1	
15	55855-61M00	..LOCK PIN SET	1	
16	55856-61M00	..GUIDE PIN	1	
17	55857-61M00	..BOOT PIN	2	
18	55206-61M00	..BOLT PIN	2	
19	55860-61M02	.SPRING SET	1	
20	55870-61M00	.BLEEDER SET	1	
21	55810-61M02	PAD SET	1	
22	09117-12012	BOLT (12X32)	4	
23	55311-61M10	DISC, FR BK	2	
24	55321-61M00	COVER, BRAKE DISC DUST	2	

FIG.530A

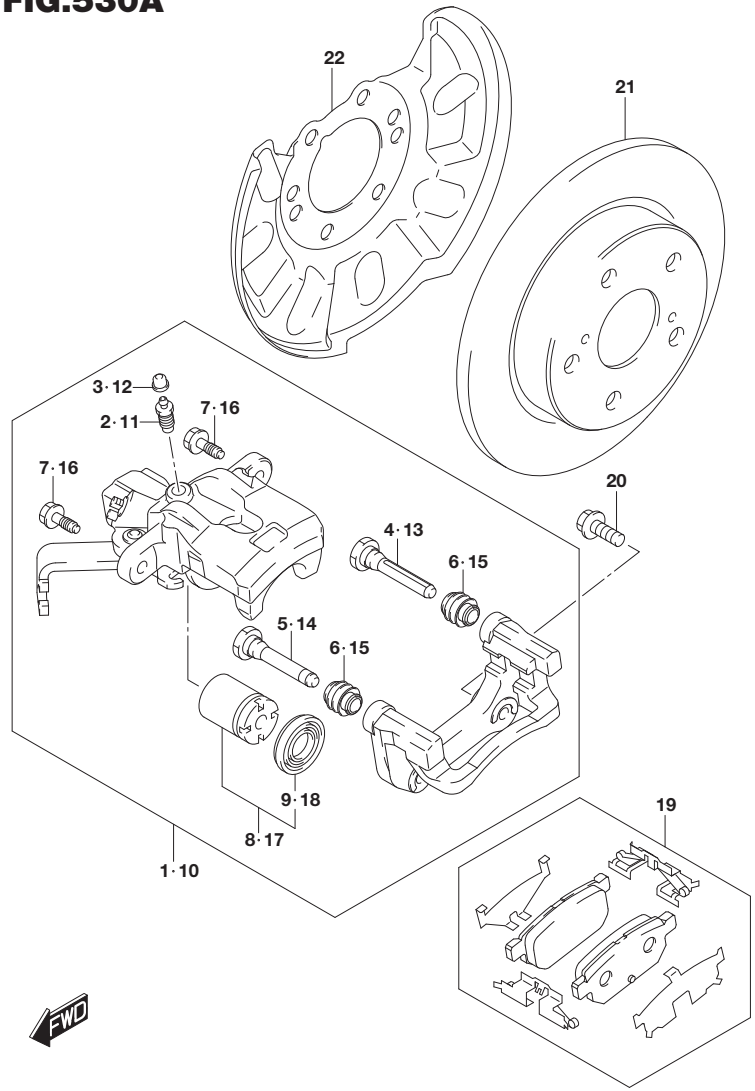

FIG.530A (3-E-4) REAR WHEEL BRAKE

REF NO.	PART NO.	DESCRIPTION	Q'TY	REMARKS
1	55401-61M00-999	CALIPER ASSY, RR RH	1	
2	55151-78451	.PLUG, BLEEDER (M10X1)	1	
3	55156-66310	.CAP, BLEEDER PLUG (M10X1)	1	
4	55191-68L00	.PIN (D:9.9)	1	
5	55192-68L00	.PIN (D:9.7)	1	
6	55201-68L00	.BOOT	2	
7	55206-78452	.BOLT, PIN	2	
8	55890-68L01	.PISTON / SEAL SET	1	
9	55880-68L01	..SEAL SET	1	
10	55402-61M00-999	CALIPER ASSY, RR LH	1	
11	55151-78451	.PLUG, BLEEDER (M10X1)	1	
12	55156-66310	.CAP, BLEEDER PLUG (M10X1)	1	
13	55191-68L00	.PIN (D:9.9)	1	
14	55192-68L00	.PIN (D:9.7)	1	
15	55201-68L00	.BOOT	2	
16	55206-78452	.BOLT, PIN	2	
17	55890-68L01	.PISTON / SEAL SET	1	
18	55880-68L01	..SEAL SET	1	
19	55800-61M02	PAD SET	1	
20	09103-10373	BOLT (10X25)	4	
21	55611-61M20	DISC, RR BK	2	
22	55621-72L00	COVER, RR BK DISC DUST	2	

FIG.542A

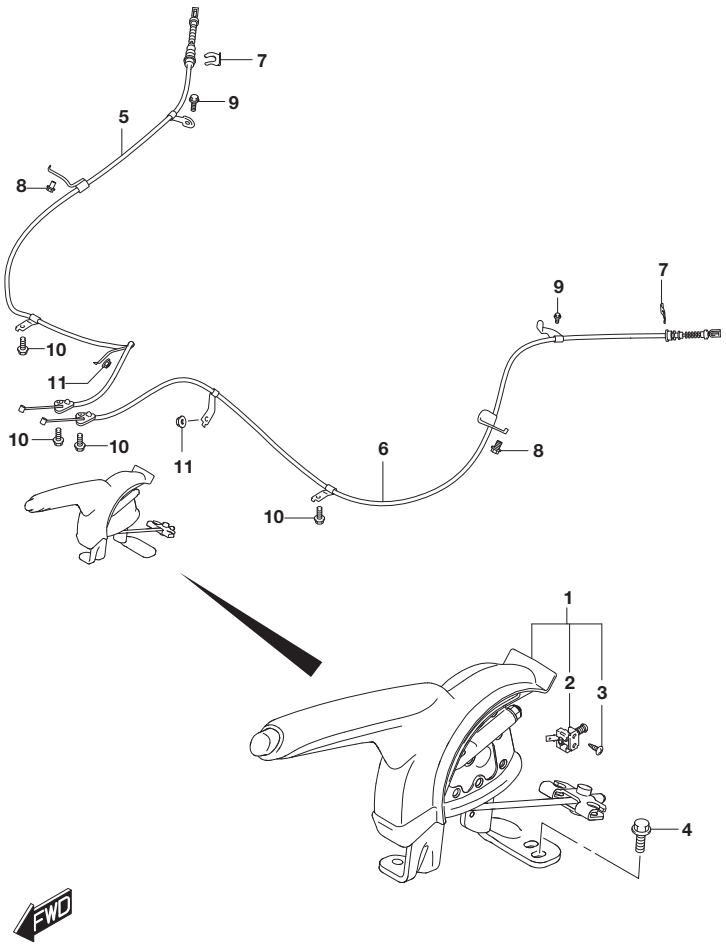

FIG.542A (3-E-5) PARKING BRAKE

REF NO.	PART NO.	DESCRIPTION	Q'TY	REMARKS
1-1	54100-61M11-5PK	LEVER ASSY, PARKING BRAKE (BLACK)	1	
1-2	54100-61M01-C48	LEVER ASSY, PARKING BRAKE (CHROME/BLACK)	1	
2	37940-76G00	.SWITCH ASSY, PARKING BK	1	
3	54115-76G00	.SCREW	1	
4	01551-0820A	BOLT	2	
5-1	54401-54P00	CABLE, PARKING BRAKE RH	1	K10C
5-2	54401-60R00	CABLE, PARKING BRAKE RH	1	K14C,K14D
6-1	54402-54P00	CABLE, PARKING BRAKE LH	1	K10C
6-2	54402-60R00	CABLE, PARKING BRAKE LH	1	K14C,K14D
7	09383-13003	E-RING	2	
8	01551-0812A	BOLT	2	
9	02162-0612A	SCREW	2	
10	02162-0616A	SCREW	4	
11	08316-1006A	NUT	2	

FIG.570A

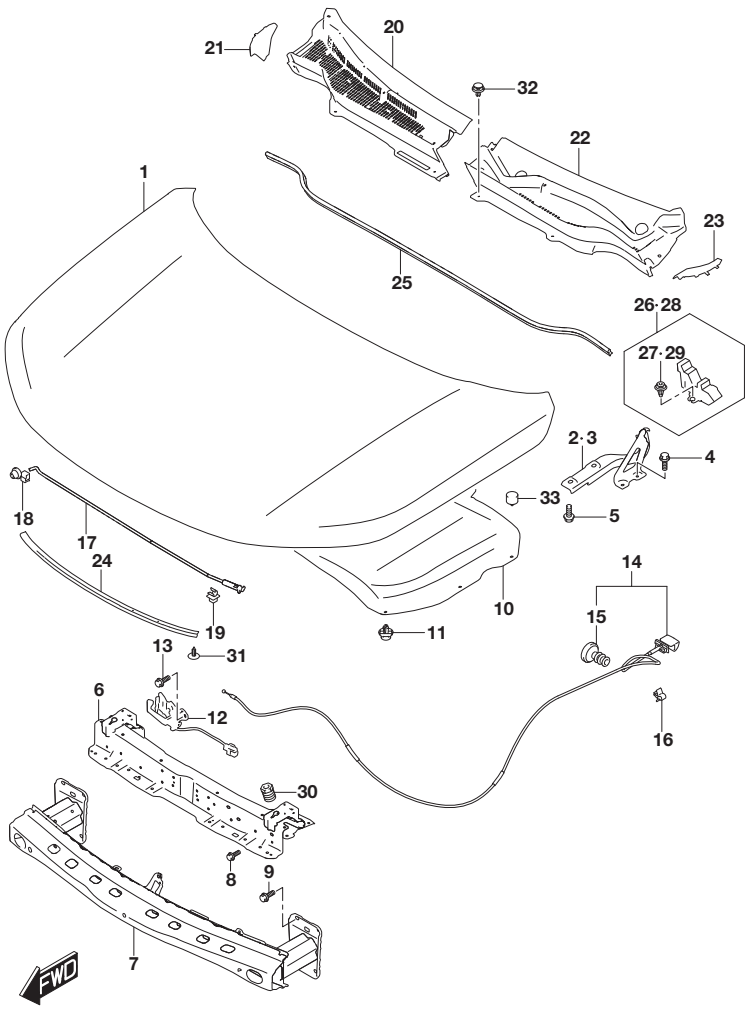

FIG.570A (3-E-6) FRONT HOOD PANEL (LHD:N/AEB CAMERA)

REF NO.	PART NO.	DESCRIPTION	Q'TY	REMARKS
1	57300-54P00	PANEL, FR HOOD	1	
2	57410-54P00	HINGE, FR HOOD RH	1	
3	57420-54P00	HINGE, FR HOOD LH	1	
4	01550-0612A	BOLT	4	
5	01551-0820A	BOLT	4	
6	58230-54P00	MEMBER, HOOD LOCK	1	
7-1	58270-86R00	MEMBER, FR BUMPER	1	K10C,K14C
7-2	58270-53S00	MEMBER, FR BUMPER	1	K14D
8	01550-0612A	BOLT	4	
9	01551-0820A	BOLT	8	
10	72440-54P00	SILENCER, FR HOOD	1	
11	09409-07340	CLIP (6.8X11.5)	11	
12	82110-54P31	LATCH, HOOD	1	
13	01551-0616C	BOLT	3	
14	82160-54P10	CABLE, HOOD LATCH RELEASE	1	
15	82191-50E00	.GROMMET, LATCH RELEASE CABLE	1	
16	09403-04401	CLAMP (D:4.8)	7	
17	72310-54P10	STAY, FR HOOD	1	
18	09209-14001	LINKAGE	1	
19	09403-07407	CLAMP	1	
20	72330-54P10-5PK	GARNISH, COWL TOP RH (BLACK)	1	
21	72332-54P00-5PK	GARNISH, COWL TOP SIDE RH (BLACK)	1	
22	72340-54P10-5PK	GARNISH, COWL TOP LH (BLACK)	1	
23	72342-54P00-5PK	GARNISH, COWL TOP SIDE LH (BLACK)	1	
24	72361-54P00	SEAL, HOOD FR	1	
25	72362-61M00	SEAL, HOOD REAR	1	
26	72364-54P00	SEAL, COWL SIDE RH	1	
27	09409-10314	.CLIP	1	

FIG.570B(3-E-8) FRONT HOOD PANEL (LHD:W/AEB MONAURAL CAMERA)
FIG.570C(3-E-10) FRONT HOOD PANEL (RHD:N/AEB CAMERA)
FIG.570D(3-E-11) FRONT HOOD PANEL (RHD:W/AEB MONAURAL CAMERA)

FIG.570A

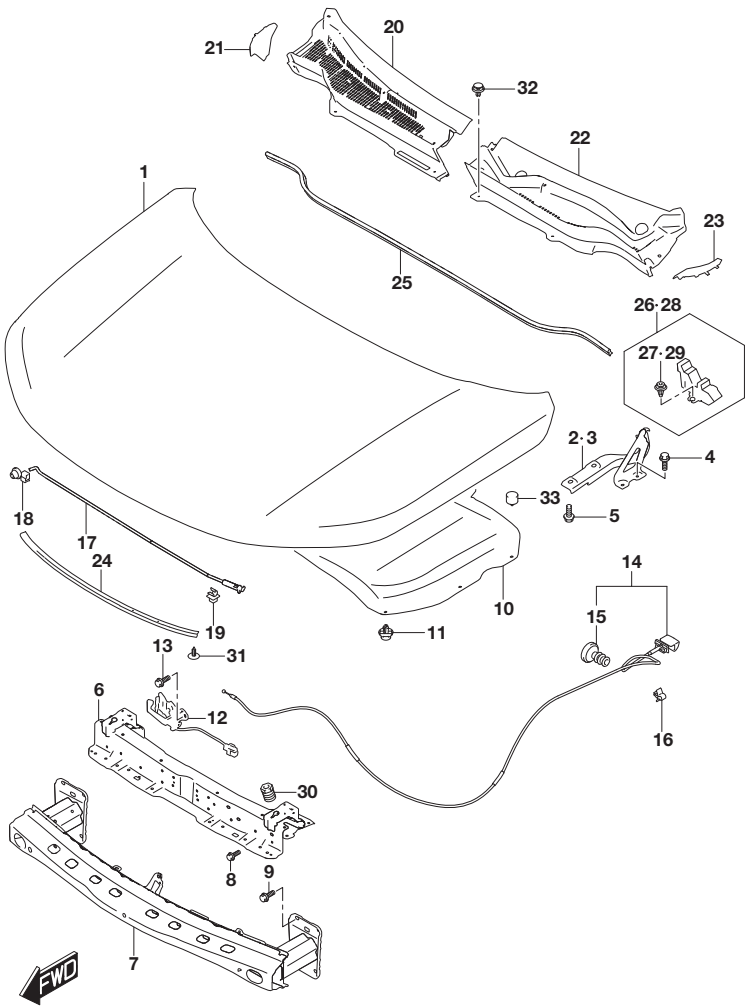

FIG.570A (3-E-7) FRONT HOOD PANEL (LHD:N/AEB CAMERA)

REF NO.	PART NO.	DESCRIPTION	Q'TY	REMARKS
28	72368-54P00	SEAL, COWL SIDE LH	1	
29	09409-10314	.CLIP	1	
30	72372-80E00	CUSHION, FR HOOD FR	2	
31	09409-05303-5PK	CLIP (BLACK)	8	
32	09409-08327	CLIP (7.8X20)	6	
33	09321-10023	CUSHION (HD:10)	2	

FIG.570B

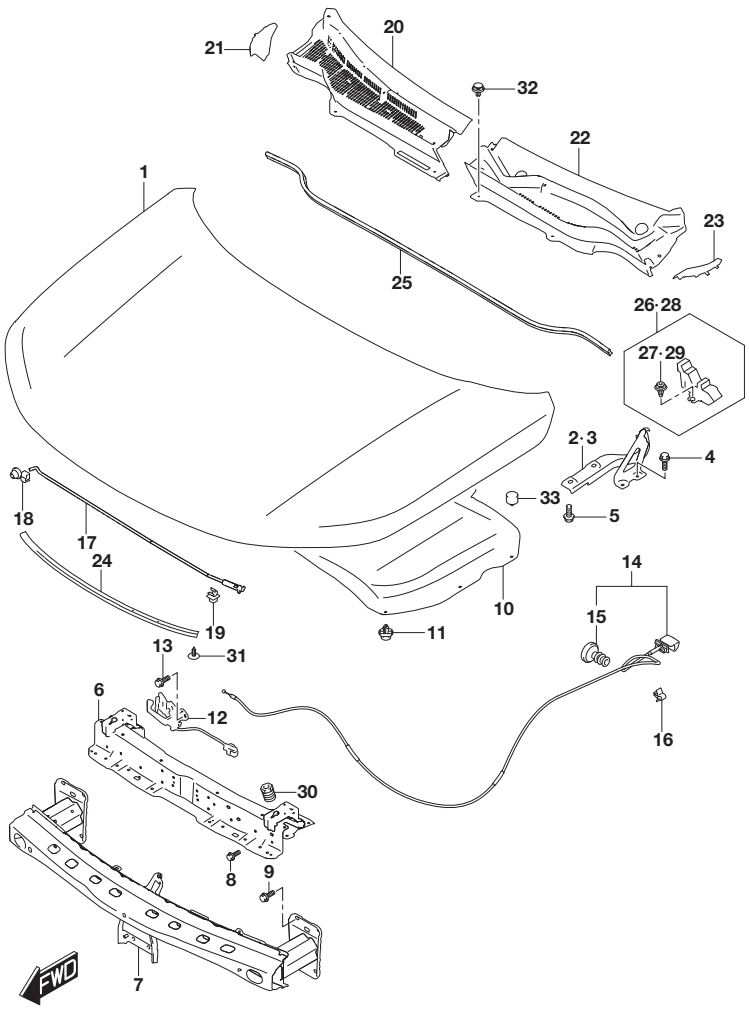

FIG.570B (3-E-8) FRONT HOOD PANEL (LHD:W/AEB MONAURAL CAMERA)

REF NO.	PART NO.	DESCRIPTION	Q'TY	REMARKS
1	57300-54P00	PANEL, FR HOOD	1	
2	57410-54P00	HINGE, FR HOOD RH	1	
3	57420-54P00	HINGE, FR HOOD LH	1	
4	01550-0612A	BOLT	4	
5	01551-0820A	BOLT	4	
6	58230-54P00	MEMBER, HOOD LOCK	1	
7-1	58270-86R10	MEMBER, FR BUMPER	1	K10C,K14C
7-2	58270-53S10	MEMBER, FR BUMPER	1	K14D
8	01550-0612A	BOLT	4	
9	01551-0820A	BOLT	8	
10	72440-54P00	SILENCER, FR HOOD	1	
11	09409-07340	CLIP (6.8X11.5)	11	
12	82110-54P31	LATCH, HOOD	1	
13	01551-0616C	BOLT	3	
14	82160-54P10	CABLE, HOOD LATCH RELEASE	1	
15	82191-50E00	.GROMMET, LATCH RELEASE CABLE	1	
16-1	09403-04401	CLAMP (D:4.8)	7	W/FENDER TURN SIGNAL
16-2	09403-04401	CLAMP (D:4.8)	8	W/MIRROR TURN SIGNAL
17	72310-54P10	STAY, FR HOOD	1	
18	09209-14001	LINKAGE	1	
19	09403-07407	CLAMP	1	
20	72330-54P10-5PK	GARNISH, COWL TOP RH (BLACK)	1	
21	72332-54P00-5PK	GARNISH, COWL TOP SIDE RH (BLACK)	1	
22	72340-54P10-5PK	GARNISH, COWL TOP LH (BLACK)	1	
23	72342-54P00-5PK	GARNISH, COWL TOP SIDE LH (BLACK)	1	
24	72361-54P00	SEAL, HOOD FR	1	
25	72362-61M00	SEAL, HOOD REAR	1	
26	72364-54P00	SEAL, COWL SIDE RH	1	
27	09409-10314	.CLIP	1	
28	72368-54P00	SEAL, COWL SIDE LH	1	
29	09409-10314	.CLIP	1	
30	72372-80E00	CUSHION, FR HOOD FR	2	
31	09409-05303-5PK	CLIP (BLACK)	8	
32	09409-08327	CLIP (7.8X20)	6	

FIG.570B

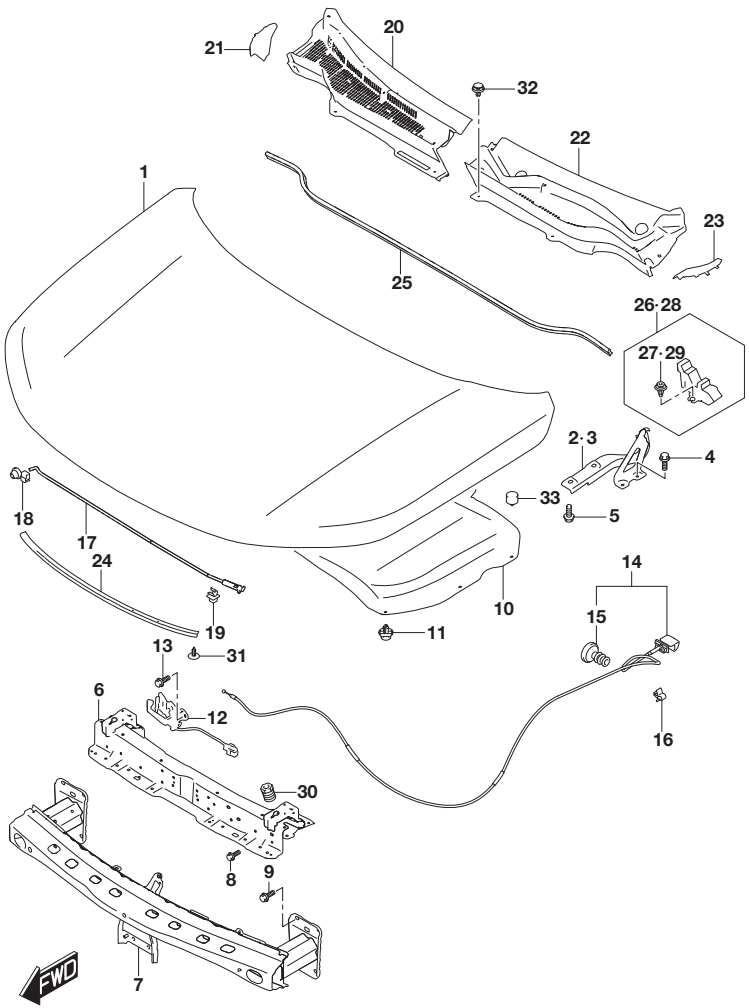

FIG.570B (3-E-9) FRONT HOOD PANEL (LHD:W/AEB MONAURAL CAMERA)

REF NO.	PART NO.	DESCRIPTION	Q'TY	REMARKS
33	09321-10023	CUSHION (HD:10)	2	

APK414-3 P22 570B
FRONT HOOD PANEL (2)

FIG.570C

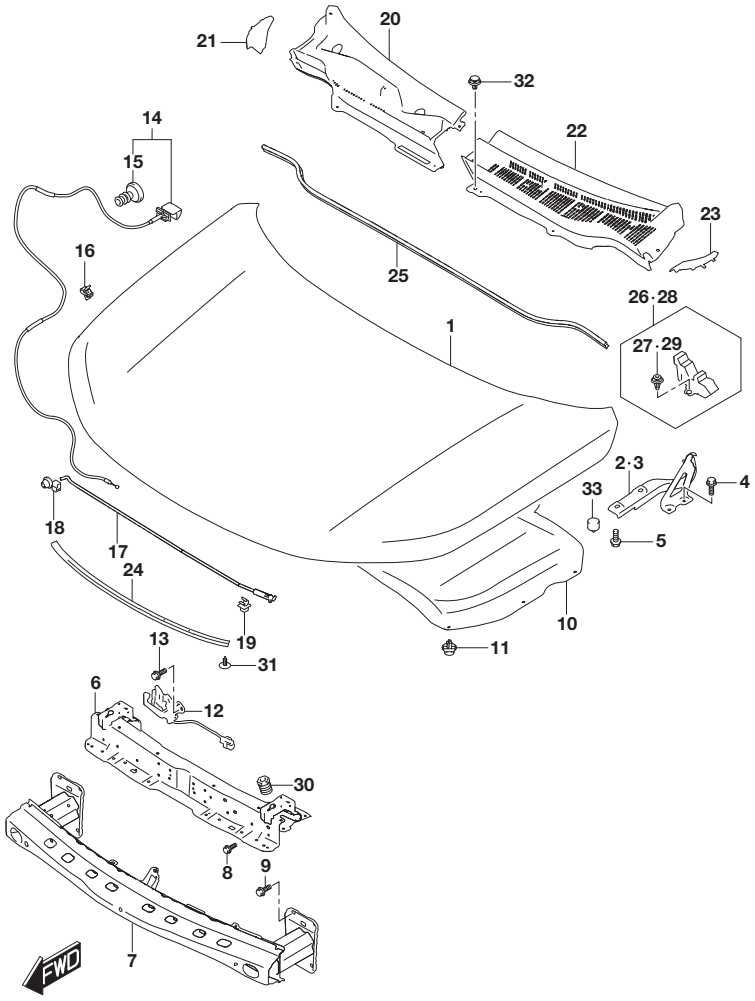

FIG.570C (3-E-10) FRONT HOOD PANEL (RHD:N/AEB CAMERA)

REF NO.	PART NO.	DESCRIPTION	Q'TY	REMARKS
1	57300-54P00	PANEL, FR HOOD	1	
2	57410-54P00	HINGE, FR HOOD RH	1	
3	57420-54P00	HINGE, FR HOOD LH	1	
4	01550-0612A	BOLT	4	
5	01551-0820A	BOLT	4	
6	58230-54P00	MEMBER, HOOD LOCK	1	
7-1	58270-86R00	MEMBER, FR BUMPER	1	K10C,K14C
7-2	58270-53S00	MEMBER, FR BUMPER	1	K14D
8	01550-0612A	BOLT	4	
9	01551-0820A	BOLT	8	
10	72440-54P00	SILENCER, FR HOOD	1	
11	09409-07340	CLIP (6.8X11.5)	11	
12	82110-54P21	LATCH, HOOD	1	
13	01551-0616C	BOLT	3	
14	82160-54P00	CABLE, HOOD LATCH RELEASE	1	
15	82191-50E00	.GROMMET, LATCH RELEASE CABLE	1	
16	09403-04401	CLAMP (D:4.8)	7	
17	72310-54P10	STAY, FR HOOD	1	
18	09209-14001	LINKAGE	1	
19	09403-07407	CLAMP	1	
20	72330-54P00-5PK	GARNISH, COWL TOP RH (BLACK)	1	
21	72332-54P00-5PK	GARNISH, COWL TOP SIDE RH (BLACK)	1	
22	72340-54P00-5PK	GARNISH, COWL TOP LH (BLACK)	1	
23	72342-54P00-5PK	GARNISH, COWL TOP SIDE LH (BLACK)	1	
24	72361-54P00	SEAL, HOOD FR	1	
25	72362-61M00	SEAL, HOOD REAR	1	
26	72364-54P00	SEAL, COWL SIDE RH	1	
27	09409-10314	.CLIP	1	
28	72368-54P00	SEAL, COWL SIDE LH	1	
29	09409-10314	.CLIP	1	
30	72372-80E00	CUSHION, FR HOOD FR	2	
31	09409-05303-5PK	CLIP (BLACK)	8	
32	09409-08327	CLIP (7.8X20)	6	
33	09321-10023	CUSHION (HD:10)	2	

FIG.570D

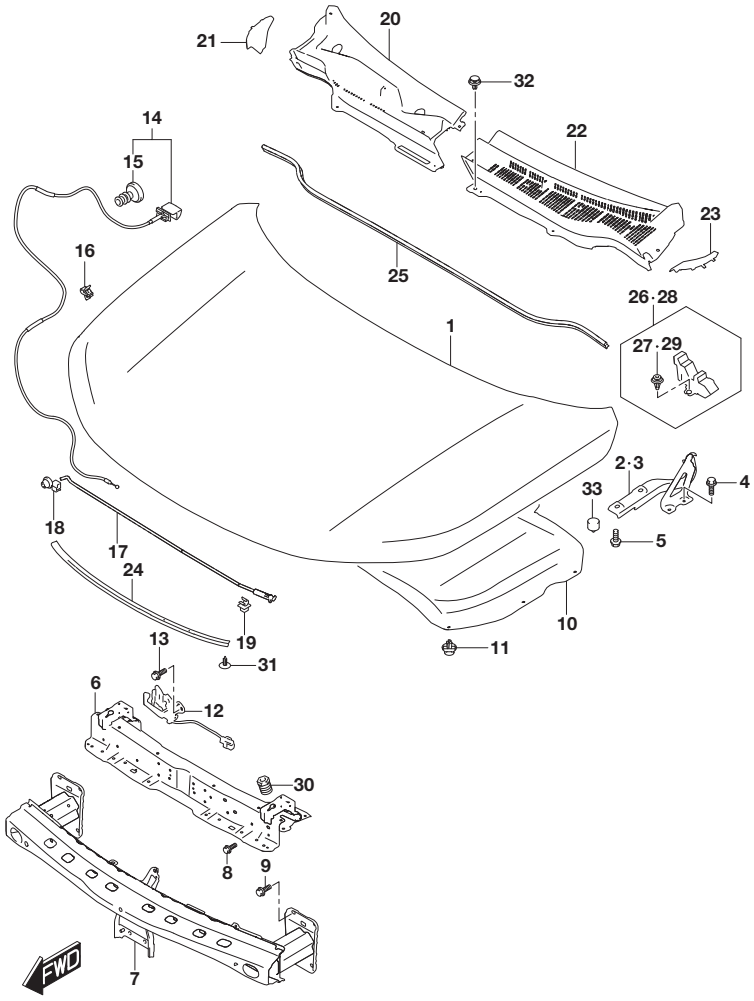

FIG.570D (3-E-11) FRONT HOOD PANEL (RHD:W/AEB MONAURAL CAMERA)

REF NO.	PART NO.	DESCRIPTION	Q'TY	REMARKS
1	57300-54P00	PANEL, FR HOOD	1	
2	57410-54P00	HINGE, FR HOOD RH	1	
3	57420-54P00	HINGE, FR HOOD LH	1	
4	01550-0612A	BOLT	4	
5	01551-0820A	BOLT	4	
6	58230-54P00	MEMBER, HOOD LOCK	1	
7-1	58270-86R10	MEMBER, FR BUMPER	1	K10C,K14C
7-2	58270-53S10	MEMBER, FR BUMPER	1	K14D
8	01550-0612A	BOLT	4	
9	01551-0820A	BOLT	8	
10	72440-54P00	SILENCER, FR HOOD	1	
11	09409-07340	CLIP (6.8X11.5)	11	
12	82110-54P21	LATCH, HOOD	1	
13	01551-0616C	BOLT	3	
14	82160-54P00	CABLE, HOOD LATCH RELEASE	1	
15	82191-50E00	.GROMMET, LATCH RELEASE CABLE	1	
16	09403-04401	CLAMP (D:4.8)	7	
17	72310-54P10	STAY, FR HOOD	1	
18	09209-14001	LINKAGE	1	
19	09403-07407	CLAMP	1	
20	72330-54P00-5PK	GARNISH, COWL TOP RH (BLACK)	1	
21	72332-54P00-5PK	GARNISH, COWL TOP SIDE RH (BLACK)	1	
22	72340-54P00-5PK	GARNISH, COWL TOP LH (BLACK)	1	
23	72342-54P00-5PK	GARNISH, COWL TOP SIDE LH (BLACK)	1	
24	72361-54P00	SEAL, HOOD FR	1	
25	72362-61M00	SEAL, HOOD REAR	1	
26	72364-54P00	SEAL, COWL SIDE RH	1	
27	09409-10314	.CLIP	1	
28	72368-54P00	SEAL, COWL SIDE LH	1	
29	09409-10314	.CLIP	1	
30	72372-80E00	CUSHION, FR HOOD FR	2	
31	09409-05303-5PK	CLIP (BLACK)	8	
32	09409-08327	CLIP (7.8X20)	6	
33	09321-10023	CUSHION (HD:10)	2	

FIG.580A

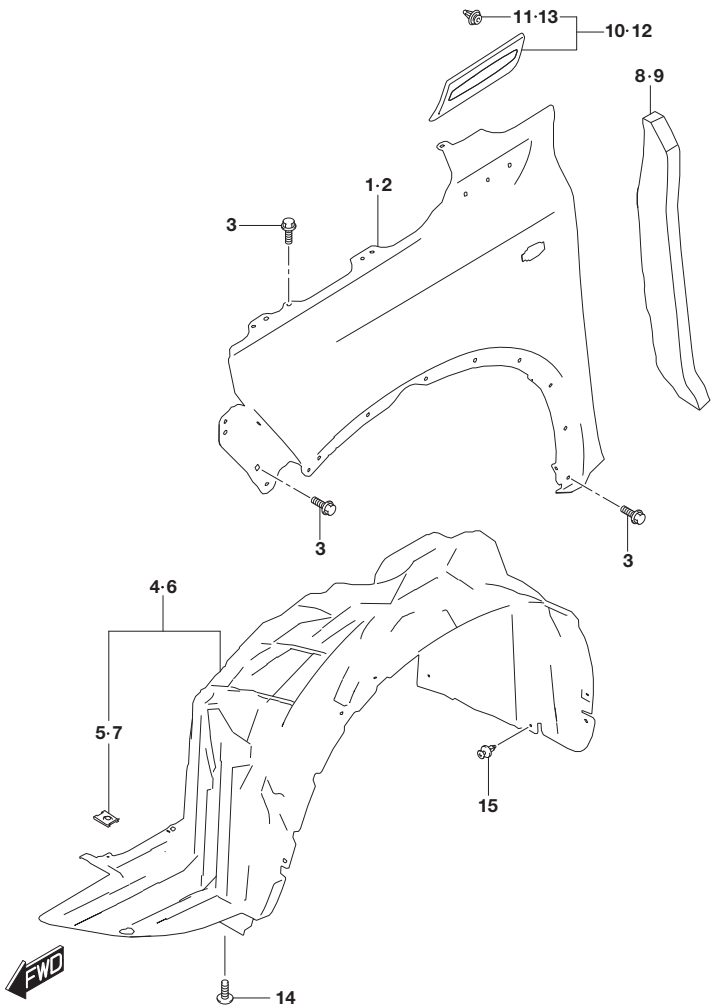

FIG.580A (3-E-12) FRONT FENDER PANEL (W/FENDER TURN SIGNAL)

REF NO.	PART NO.	DESCRIPTION	Q'TY	REMARKS
1	57611-54P00	PANEL, FR FENDER RH	1	
2	57711-54P00	PANEL, FR FENDER LH	1	
3	01550-0612A	BOLT	14	
4	72321-54P00	LINING, FR FENDER RH	1	
5	09148-05047	.NUT	3	
6	72322-54P00	LINING, FR FENDER LH	1	
7	09148-05047	.NUT	3	
8	72351-54P00	PAD, FR FENDER RR RH	1	
9	72352-54P00	PAD, FR FENDER RR LH	1	
10-1	72610-54P00-5PK	GARNISH, FR FENDER RH (BLACK)	1	W/BULB DRL
10-2	72610-54P00-5PK	GARNISH, FR FENDER RH (BLACK)	1	W/LED DRL:N/CONSOLE ARMREST
10-3	72610-54P10-C48	GARNISH, FR FENDER RH (CHROME/BLACK)	1	W/LED DRL:W/CONSOLE ARMREST
11	09409-10312	.CLIP	2	
12-1	72620-54P00-5PK	GARNISH, FR FENDER LH (BLACK)	1	W/BULB DRL
12-2	72620-54P00-5PK	GARNISH, FR FENDER LH (BLACK)	1	W/LED DRL:N/CONSOLE ARMREST
12-3	72620-54P10-C48	GARNISH, FR FENDER LH (CHROME/BLACK)	1	W/LED DRL:W/CONSOLE ARMREST
13	09409-10312	.CLIP	2	
14	09132-05053	SCREW (5X16)	6	
15	09409-07340	CLIP (6.8X11.5)	20	

FIG.580B

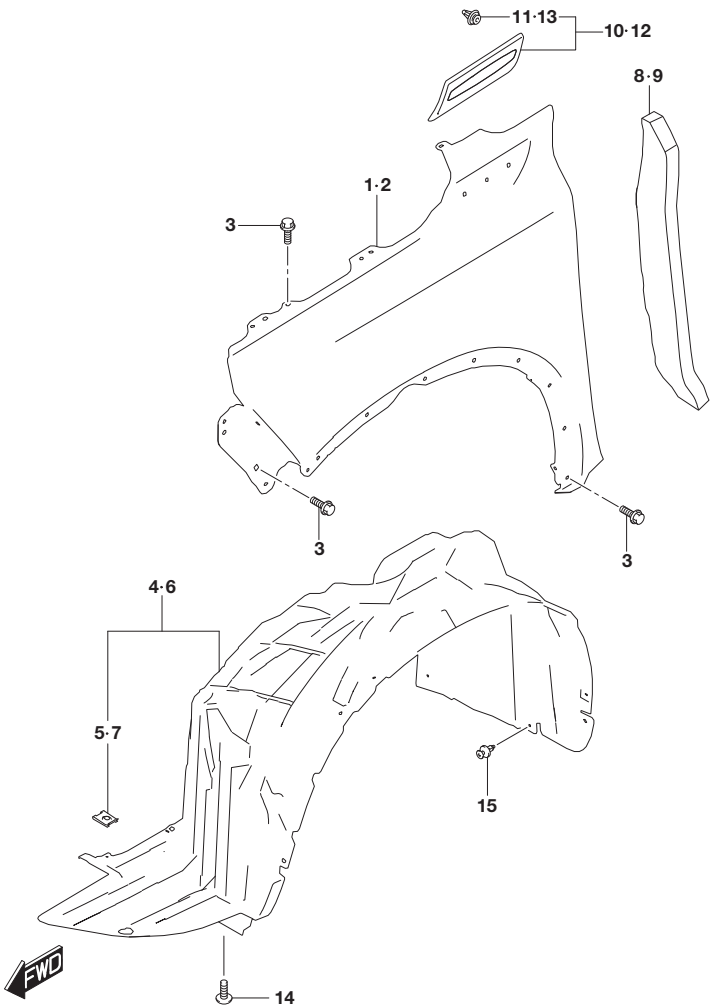

FIG.580B (3-E-13) FRONT FENDER PANEL (W/MIRROR TURN SIGNAL)

REF NO.	PART NO.	DESCRIPTION	Q'TY	REMARKS
1	57611-54P10	PANEL, FR FENDER RH	1	
2	57711-54P10	PANEL, FR FENDER LH	1	
3	01550-0612A	BOLT	14	
4	72321-54P00	LINING, FR FENDER RH	1	
5	09148-05047	.NUT	3	
6	72322-54P00	LINING, FR FENDER LH	1	
7	09148-05047	.NUT	3	
8	72351-54P00	PAD, FR FENDER RR RH	1	
9	72352-54P00	PAD, FR FENDER RR LH	1	
10	72610-54P10-C48	GARNISH, FR FENDER RH (CHROME/BLACK)	1	
11	09409-10312	.CLIP	2	
12	72620-54P10-C48	GARNISH, FR FENDER LH (CHROME/BLACK)	1	
13	09409-10312	.CLIP	2	
14	09132-05053	SCREW (5X16)	6	
15	09409-07340	CLIP (6.8X11.5)	20	

FIG.590A

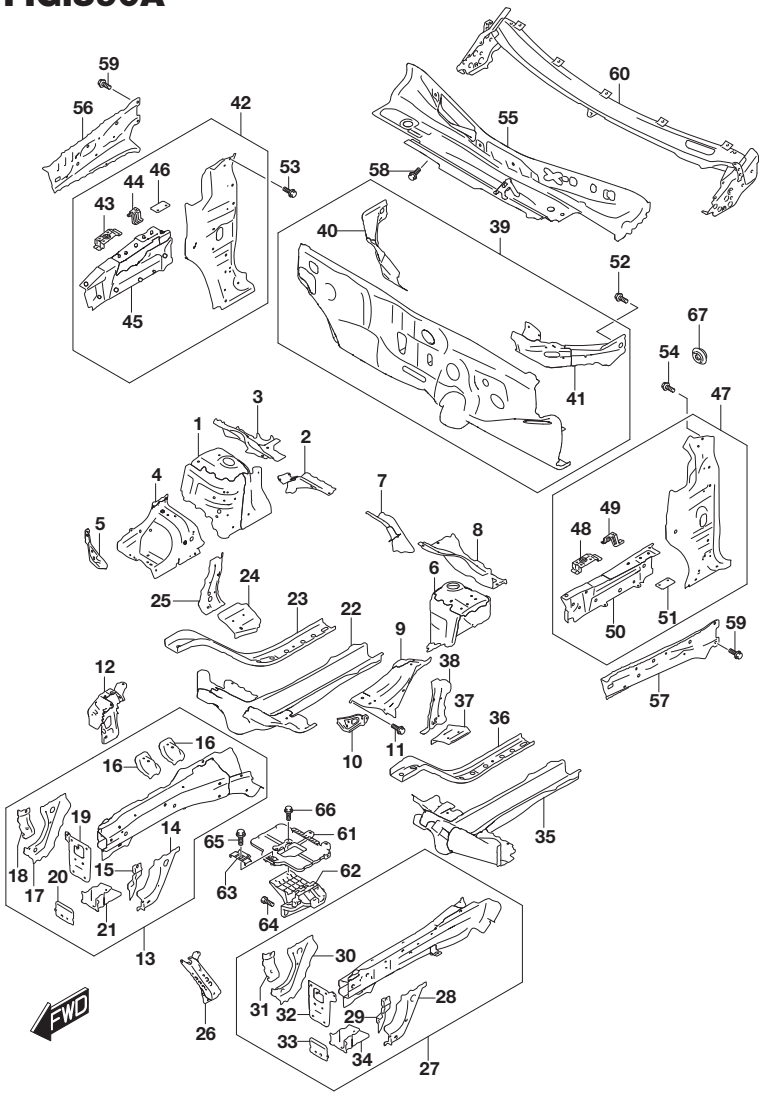

FIG.590A (3-E-14) FRONT BODY PANEL (LHD:N/EASS)

REF NO.	PART NO.	DESCRIPTION	Q'TY	REMARKS
1	58310-61M00	PANEL, FENDER APRON RH	1	
2	58320-61MA0	REINF, COWL UPR RH	1	
3	58322-61M00	EXTENSION, SPNSN UPR RH	1	
4	58330-61M00	EXTENSION, FNDR APRN RH	1	
5	58333-54P00	BRACKET, FR FENDER LWR RH	1	
6	58410-61M00	PANEL, FNDR APRN LH	1	
7	58420-61MA0	REINF, COWL UPR LH	1	
8	58422-61M00	EXTENSION, SPNSN UPR LH	1	
9	58430-61M00	EXTENSION, FNDR APRN LH	1	
10	58433-54P00	BRACKET, FR FENDER LWR LH	1	
11	01550-0612A	BOLT	1	
12	58110-54P00	BRACE, LAMP SUPPORT RH	1	
13	58610-61M12	MEMBER, APRON SIDE RH	1	
14	58612-61M00	.EXTENSION, APRN SIDE NO.1	1	
15	58613-61M00	.REINF, APRON SIDE FR NO.1	1	
16	58615-68M00	.BRACKET, ENGINE MOUNT	2	
17	58632-61M10	.EXTENSION, APRN SIDE NO.2	1	
18	58633-61M00	.REINF, APRON SIDE FR NO.2	1	
19	58641-61M00	.PLATE, FR BUMPER MBR RH	1	
20	58642-61M00	.PLATE, RDTR SPRT MBR RH	1	
21	58661-61M10	.BRACKET, RDTR SPRT MBR	1	
22	58620-61M10	MEMBER, DASH LOWER RH	1	
23	58624-79J00	REINF, DASH LWR RH	1	
24	58651-61M00	REINF, APRON SIDE RR RH	1	
25	58671-61MA0	SUPPORT, FR STRUT RH	1	
26	58120-54P00	BRACE, LAMP SUPPORT LH	1	
27	58710-61M02	MEMBER, APRN SIDE LH	1	
28	58612-61M00	.EXTENSION, APRN SIDE NO.1	1	
29	58613-61M00	.REINF, APRON SIDE FR NO.1	1	
30	58632-61M10	.EXTENSION, APRN SIDE NO.2	1	

FIG.590B(3-F-3) FRONT BODY PANEL (LHD:W/EASS)
FIG.590C(3-F-5) FRONT BODY PANEL (RHD:N/EASS)
FIG.590D(3-F-7) FRONT BODY PANEL (RHD:W/EASS)

FIG.590A

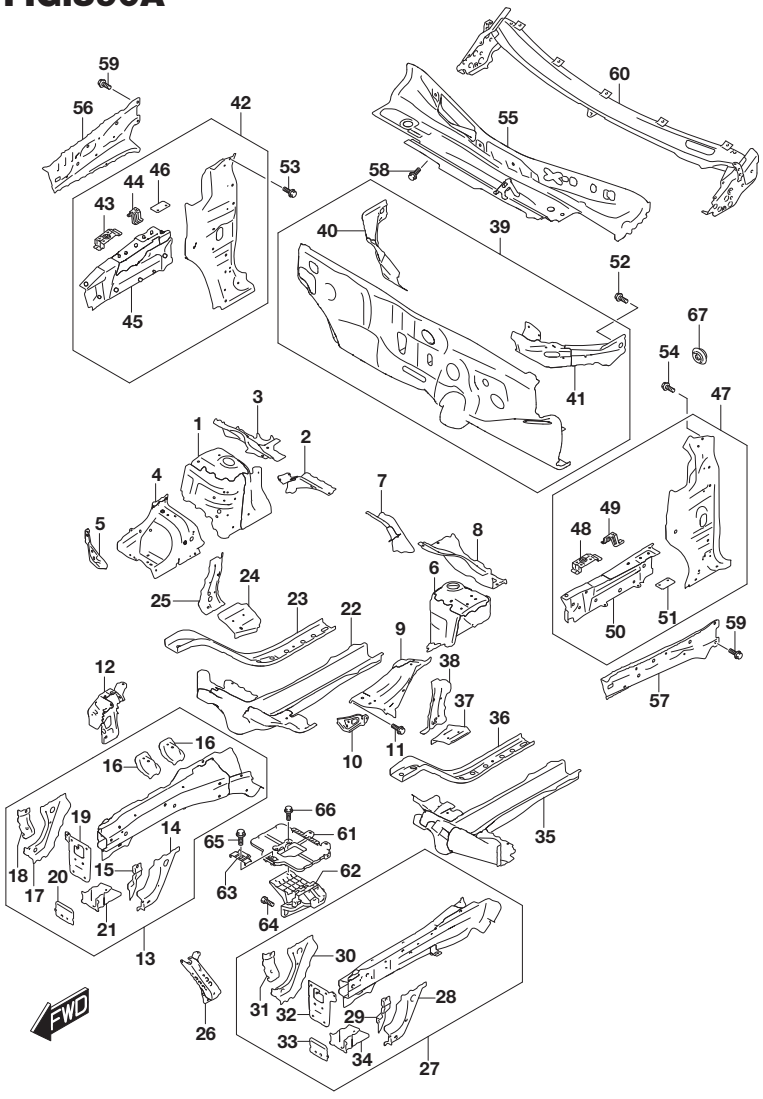

FIG.590A (3-E-15) FRONT BODY PANEL (LHD:N/EASS)

REF NO.	PART NO.	DESCRIPTION	Q'TY	REMARKS
31	58633-61M00	.REINF, APRON SIDE FR NO.2	1	
32	58741-61M00	.PLATE, FR BUMPER MBR LH	1	
33	58742-61M00	.PLATE, RDTR SPRT MBR LH	1	
34	58661-61M10	.BRACKET, RDTR SPRT MBR	1	
35	58720-61M10	MEMBER, DASH LWR LH	1	
36	58724-79J00	REINF, DASH LWR LH	1	
37	58751-61M00	REINF, APRON SIDE RR LH	1	
38	58771-61MA0	SUPPORT, FR STRUT LH	1	
39-1	59100-61MB0	PANEL, DASH	1	5MT,6MT
39-2	59100-61MD0	PANEL, DASH	1	6AT
40	59140-61M10	.REINF, DASH PANEL SIDE RH	1	
41	59150-61M10	.REINF, DASH PANEL SIDE LH	1	
42	59230-54P01	PANEL, DASH SIDE RH	1	
43	59234-54P01	.BRACKET, FR FNDR RH	1	
44	59235-54P00	.BRACKET, FR FNDR RR RH	1	
45	59240-54P00	.PANEL, DASH SIDE FR RH	1	
46	59744-79J00	.PATCH, FR HOOD HINGE	1	
47	59280-54P01	PANEL, DASH SIDE LH	1	
48	59284-54P01	.BRACKET, FR FNDR LH	1	
49	59285-54P00	.BRACKET, FR FNDR RR LH	1	
50	59290-54P00	.PANEL, DASH SIDE FR LH	1	
51	59744-79J00	.PATCH, FR HOOD HINGE	1	
52	01550-0612A	BOLT	2	
53	01550-0612A	BOLT	2	
54	01550-0612A	BOLT	2	
55	59300-54P10	PANEL, COWL UPR	1	
56	59411-54P00	MEMBER, COWL SIDE OUTER RH	1	
57	59461-54P00	MEMBER, COWL SIDE OUTER LH	1	
58	01550-0612A	BOLT	2	
59	01551-0820A	BOLT	4	
60-1	59700-54P00	PANEL, COWL	1	N/SUNROOF
60-2	59700-54P10	PANEL, COWL	1	W/SUNROOF
61	72521-61M10	TRAY, BATTERY	1	
62	72522-61M00	BRACKET, BATTERY	1	
63	72524-83E10	BAND, BATTERY	1	
64	09118-08119	BOLT (8X25)	5	

FIG.590A

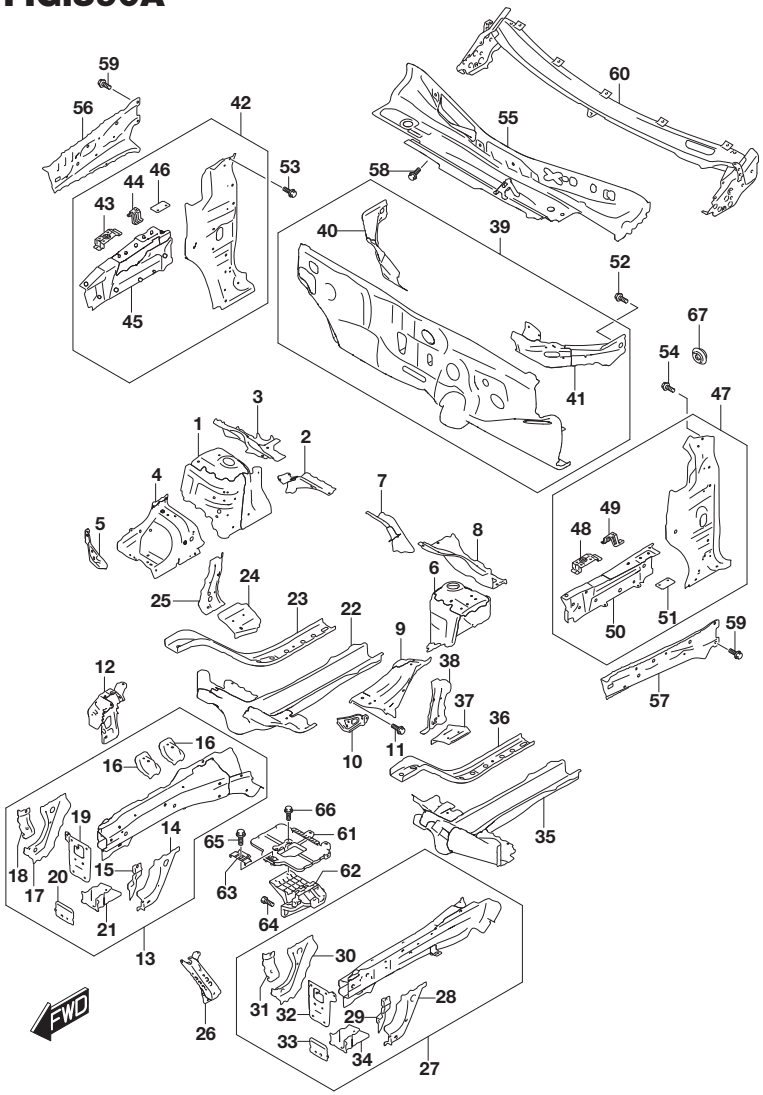

FIG.590A (3-F-2) FRONT BODY PANEL (LHD:N/EASS)

REF NO.	PART NO.	DESCRIPTION	Q'TY	REMARKS
65	01580-0825A	BOLT	1	
66	02162-0625A	SCREW	2	
67	95761-64A00	GROMMET (OD:25)	1	N/AIR CON

APK414-3 P22 590A
FRONT BODY PANEL (1)

FIG.590B

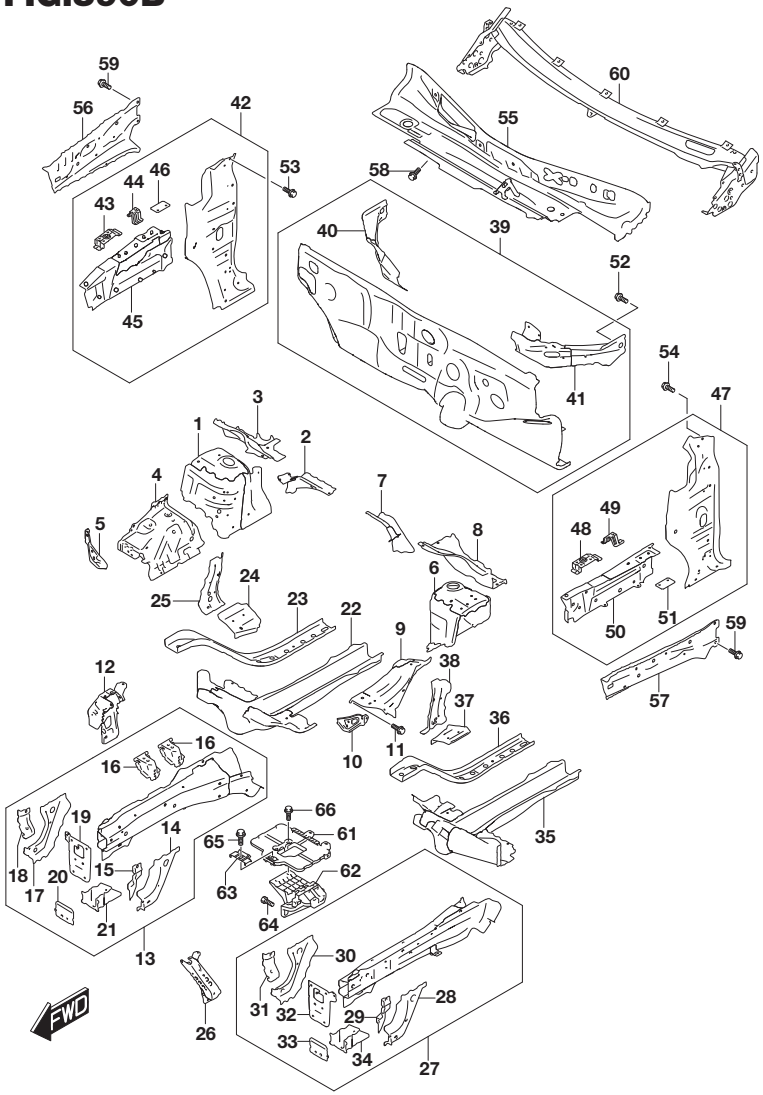

FIG.590B (3-F-3) FRONT BODY PANEL (LHD:W/EASS)

REF NO.	PART NO.	DESCRIPTION	Q'TY	REMARKS
1	58310-61M00	PANEL, FENDER APRON RH	1	
2	58320-61MA0	REINF, COWL UPR RH	1	
3	58322-61M00	EXTENSION, SPNSN UPR RH	1	
4	58330-53S00	EXTENSION, FNDR APRN RH	1	
5	58333-54P00	BRACKET, FR FENDER LWR RH	1	
6	58410-61M00	PANEL, FNDR APRN LH	1	
7	58420-61MA0	REINF, COWL UPR LH	1	
8	58422-61M00	EXTENSION, SPNSN UPR LH	1	
9	58430-61M00	EXTENSION, FNDR APRN LH	1	
10	58433-54P00	BRACKET, FR FENDER LWR LH	1	
11	01550-0612A	BOLT	1	
12	58110-54P00	BRACE, LAMP SUPPORT RH	1	
13	58610-53S10	MEMBER, APRON SIDE RH	1	
14	58612-61M00	.EXTENSION, APRN SIDE NO.1	1	
15	58613-61M00	.REINF, APRON SIDE FR NO.1	1	
16	58680-53S00	.BRACKET, ENGINE MTG RH	2	
17	58632-61M10	.EXTENSION, APRN SIDE NO.2	1	
18	58633-61M00	.REINF, APRON SIDE FR NO.2	1	
19	58641-61M00	.PLATE, FR BUMPER MBR RH	1	
20	58642-61M00	.PLATE, RDTR SPRT MBR RH	1	
21	58661-61M10	.BRACKET, RDTR SPRT MBR	1	
22	58620-61M10	MEMBER, DASH LOWER RH	1	
23	58624-79J00	REINF, DASH LWR RH	1	
24	58651-61M00	REINF, APRON SIDE RR RH	1	
25	58671-61MA0	SUPPORT, FR STRUT RH	1	
26	58120-54P00	BRACE, LAMP SUPPORT LH	1	
27	58710-61M02	MEMBER, APRN SIDE LH	1	
28	58612-61M00	.EXTENSION, APRN SIDE NO.1	1	
29	58613-61M00	.REINF, APRON SIDE FR NO.1	1	
30	58632-61M10	.EXTENSION, APRN SIDE NO.2	1	
31	58633-61M00	.REINF, APRON SIDE FR NO.2	1	
32	58741-61M00	.PLATE, FR BUMPER MBR LH	1	
33	58742-61M00	.PLATE, RDTR SPRT MBR LH	1	
34	58661-61M10	.BRACKET, RDTR SPRT MBR	1	
35	58720-61M10	MEMBER, DASH LWR LH	1	
36	58724-79J00	REINF, DASH LWR LH	1	

APK414-3 P22 590B
FRONT BODY PANEL (2)

FIG.590B

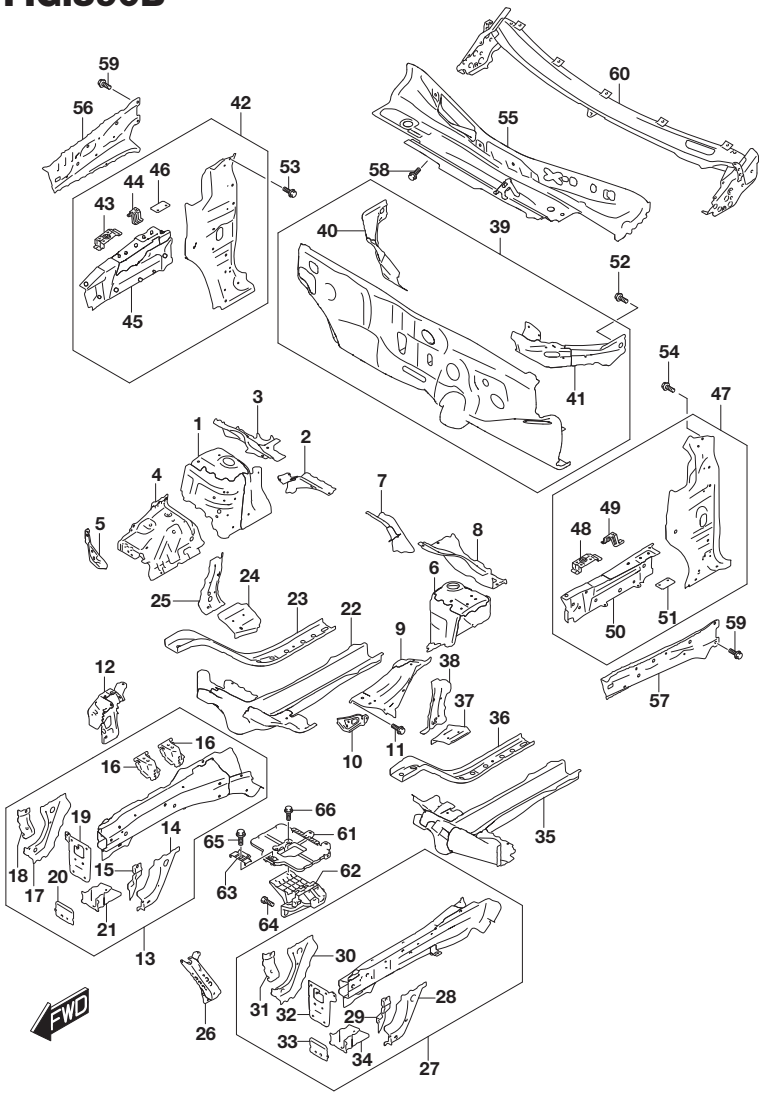

FIG.590B (3-F-4) FRONT BODY PANEL (LHD:W/EASS)

REF NO.	PART NO.	DESCRIPTION	Q'TY	REMARKS
37	58751-61M00	REINF, APRON SIDE RR LH	1	
38	58771-61MA0	SUPPORT, FR STRUT LH	1	
39	59100-61MB0	PANEL, DASH	1	
40	59140-61M10	.REINF, DASH PANEL SIDE RH	1	
41	59150-61M10	.REINF, DASH PANEL SIDE LH	1	
42	59230-54P01	PANEL, DASH SIDE RH	1	
43	59234-54P01	.BRACKET, FR FNDR RH	1	
44	59235-54P00	.BRACKET, FR FNDR RR RH	1	
45	59240-54P00	.PANEL, DASH SIDE FR RH	1	
46	59744-79J00	.PATCH, FR HOOD HINGE	1	
47	59280-54P01	PANEL, DASH SIDE LH	1	
48	59284-54P01	.BRACKET, FR FNDR LH	1	
49	59285-54P00	.BRACKET, FR FNDR RR LH	1	
50	59290-54P00	.PANEL, DASH SIDE FR LH	1	
51	59744-79J00	.PATCH, FR HOOD HINGE	1	
52	01550-0612A	BOLT	2	
53	01550-0612A	BOLT	2	
54	01550-0612A	BOLT	2	
55	59300-54P10	PANEL, COWL UPR	1	
56	59411-54P00	MEMBER, COWL SIDE OUTER RH	1	
57	59461-54P00	MEMBER, COWL SIDE OUTER LH	1	
58	01550-0612A	BOLT	2	
59	01551-0820A	BOLT	4	
60-1	59700-54P00	PANEL, COWL	1	N/SUNROOF
60-2	59700-54P10	PANEL, COWL	1	W/SUNROOF
61	72521-61M00	TRAY, BATTERY	1	
62	72522-61M00	BRACKET, BATTERY	1	
63	72524-83E10	BAND, BATTERY	1	
64	09118-08119	BOLT (8X25)	5	
65	01580-0825A	BOLT	1	
66	02162-0625A	SCREW	2	

FIG.590C

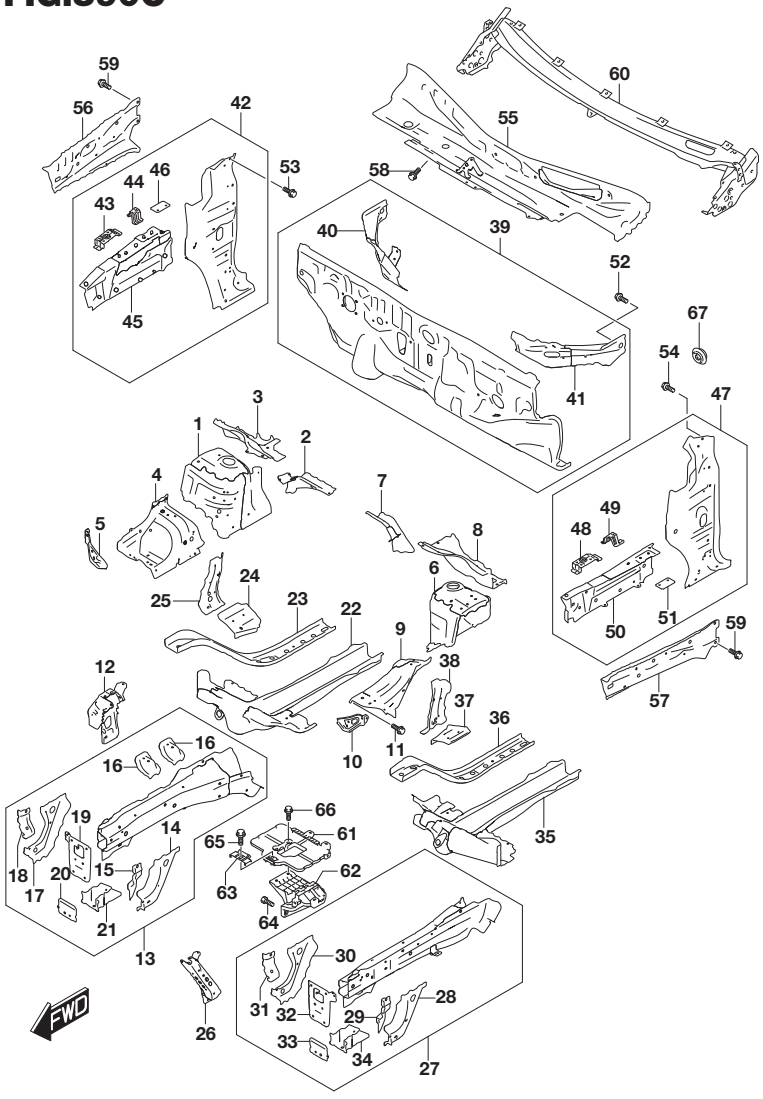

FIG.590C (3-F-5) FRONT BODY PANEL (RHD:N/EASS)

REF NO.	PART NO.	DESCRIPTION	Q'TY	REMARKS
1	58310-61M00	PANEL, FENDER APRON RH	1	
2	58320-61MA0	REINF, COWL UPR RH	1	
3	58322-61M00	EXTENSION, SPNSN UPR RH	1	
4	58330-61M00	EXTENSION, FNDR APRN RH	1	
5	58333-54P00	BRACKET, FR FENDER LWR RH	1	
6	58410-61M00	PANEL, FNDR APRN LH	1	
7	58420-61MA0	REINF, COWL UPR LH	1	
8	58422-61M00	EXTENSION, SPNSN UPR LH	1	
9	58430-61M00	EXTENSION, FNDR APRN LH	1	
10	58433-54P00	BRACKET, FR FENDER LWR LH	1	
11	01550-0612A	BOLT	1	
12	58110-54P00	BRACE, LAMP SUPPORT RH	1	
13	58610-61M02	MEMBER, APRON SIDE RH	1	
14	58612-61M00	.EXTENSION, APRN SIDE NO.1	1	
15	58613-61M00	.REINF, APRON SIDE FR NO.1	1	
16	58615-68M00	.BRACKET, ENGINE MOUNT	2	
17	58632-61M10	.EXTENSION, APRN SIDE NO.2	1	
18	58633-61M00	.REINF, APRON SIDE FR NO.2	1	
19	58641-61M00	.PLATE, FR BUMPER MBR RH	1	
20	58642-61M00	.PLATE, RDTR SPRT MBR RH	1	
21	58661-61M10	.BRACKET, RDTR SPRT MBR	1	
22	58620-61M00	MEMBER, DASH LOWER RH	1	
23	58624-79J00	REINF, DASH LWR RH	1	
24	58651-61M00	REINF, APRON SIDE RR RH	1	
25	58671-61MA0	SUPPORT, FR STRUT RH	1	
26	58120-54P00	BRACE, LAMP SUPPORT LH	1	
27	58710-61M02	MEMBER, APRN SIDE LH	1	
28	58612-61M00	.EXTENSION, APRN SIDE NO.1	1	
29	58613-61M00	.REINF, APRON SIDE FR NO.1	1	
30	58632-61M10	.EXTENSION, APRN SIDE NO.2	1	
31	58633-61M00	.REINF, APRON SIDE FR NO.2	1	
32	58741-61M00	.PLATE, FR BUMPER MBR LH	1	
33	58742-61M00	.PLATE, RDTR SPRT MBR LH	1	
34	58661-61M10	.BRACKET, RDTR SPRT MBR	1	
35	58720-61M00	MEMBER, DASH LOWER LH	1	
36	58724-79J00	REINF, DASH LWR LH	1	

FIG.590C

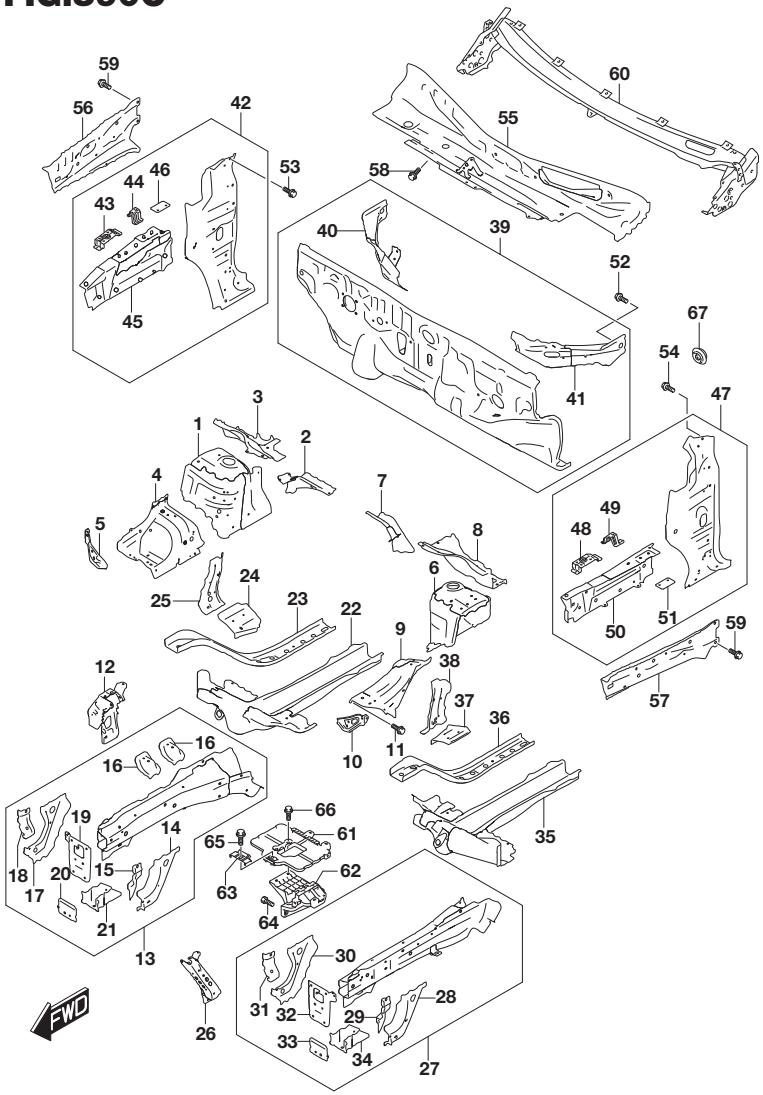

FIG.590C (3-F-6) FRONT BODY PANEL (RHD:N/EASS)

REF NO.	PART NO.	DESCRIPTION	Q'TY	REMARKS
37	58751-61M00	REINF, APRON SIDE RR LH	1	
38	58771-61MA0	SUPPORT, FR STRUT LH	1	
39-1	59100-61MA0	PANEL, DASH	1	5MT,6MT
39-2	59100-61MC0	PANEL, DASH	1	6AT
40	59140-61M00	.REINF, DASH PANEL SIDE RH	1	
41	59150-61M00	.REINF, DASH PANEL SIDE LH	1	
42	59230-54P01	PANEL, DASH SIDE RH	1	
43	59234-54P01	.BRACKET, FR FNDR RH	1	
44	59235-54P00	.BRACKET, FR FNDR RR RH	1	
45	59240-54P00	.PANEL, DASH SIDE FR RH	1	
46	59744-79J00	.PATCH, FR HOOD HINGE	1	
47	59280-54P01	PANEL, DASH SIDE LH	1	
48	59284-54P01	.BRACKET, FR FNDR LH	1	
49	59285-54P00	.BRACKET, FR FNDR RR LH	1	
50	59290-54P00	.PANEL, DASH SIDE FR LH	1	
51	59744-79J00	.PATCH, FR HOOD HINGE	1	
52	01550-0612A	BOLT	2	
53	01550-0612A	BOLT	2	
54	01550-0612A	BOLT	2	
55	59300-54P40	PANEL, COWL UPPER	1	
56	59411-54P00	MEMBER, COWL SIDE OUTER RH	1	
57	59461-54P00	MEMBER, COWL SIDE OUTER LH	1	
58	01550-0612A	BOLT	2	
59	01551-0820A	BOLT	4	
60-1	59700-54P00	PANEL, COWL	1	N/SUNROOF
60-2	59700-54P10	PANEL, COWL	1	W/SUNROOF
61	72521-61M10	TRAY, BATTERY	1	
62	72522-61M00	BRACKET, BATTERY	1	
63	72524-83E10	BAND, BATTERY	1	
64	09118-08119	BOLT (8X25)	5	
65	01580-0825A	BOLT	1	
66	02162-0625A	SCREW	2	
67	95761-64A00	GROMMET (OD:25)	1	N/AIR CON

FIG.590D

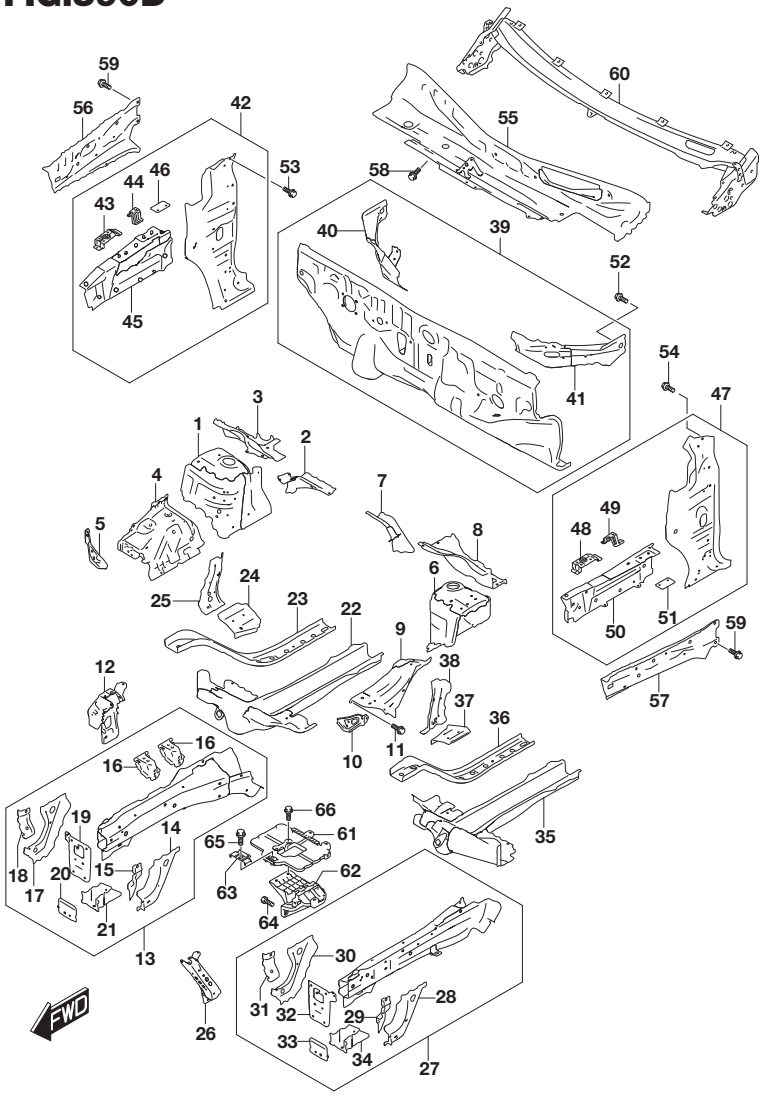

FIG.590D (3-F-7) FRONT BODY PANEL (RHD:W/EASS)

REF NO.	PART NO.	DESCRIPTION	Q'TY	REMARKS
1	58310-61M00	PANEL, FENDER APRON RH	1	
2	58320-61MA0	REINF, COWL UPR RH	1	
3	58322-61M00	EXTENSION, SPNSN UPR RH	1	
4	58330-53S00	EXTENSION, FNDR APRN RH	1	
5	58333-54P00	BRACKET, FR FENDER LWR RH	1	
6	58410-61M00	PANEL, FNDR APRN LH	1	
7	58420-61MA0	REINF, COWL UPR LH	1	
8	58422-61M00	EXTENSION, SPNSN UPR LH	1	
9	58430-61M00	EXTENSION, FNDR APRN LH	1	
10	58433-54P00	BRACKET, FR FENDER LWR LH	1	
11	01550-0612A	BOLT	1	
12	58110-54P00	BRACE, LAMP SUPPORT RH	1	
13	58610-53S00	MEMBER, APRON SIDE RH	1	
14	58612-61M00	.EXTENSION, APRN SIDE NO.1	1	
15	58613-61M00	.REINF, APRON SIDE FR NO.1	1	
16	58680-53S00	.BRACKET, ENGINE MTG RH	2	
17	58632-61M10	.EXTENSION, APRN SIDE NO.2	1	
18	58633-61M00	.REINF, APRON SIDE FR NO.2	1	
19	58641-61M00	.PLATE, FR BUMPER MBR RH	1	
20	58642-61M00	.PLATE, RDTR SPRT MBR RH	1	
21	58661-61M10	.BRACKET, RDTR SPRT MBR	1	
22	58620-61M00	MEMBER, DASH LOWER RH	1	
23	58624-79J00	REINF, DASH LWR RH	1	
24	58651-61M00	REINF, APRON SIDE RR RH	1	
25	58671-61MA0	SUPPORT, FR STRUT RH	1	
26	58120-54P00	BRACE, LAMP SUPPORT LH	1	
27	58710-61M02	MEMBER, APRN SIDE LH	1	
28	58612-61M00	.EXTENSION, APRN SIDE NO.1	1	
29	58613-61M00	.REINF, APRON SIDE FR NO.1	1	
30	58632-61M10	.EXTENSION, APRN SIDE NO.2	1	
31	58633-61M00	.REINF, APRON SIDE FR NO.2	1	
32	58741-61M00	.PLATE, FR BUMPER MBR LH	1	
33	58742-61M00	.PLATE, RDTR SPRT MBR LH	1	
34	58661-61M10	.BRACKET, RDTR SPRT MBR	1	
35	58720-61M00	MEMBER, DASH LOWER LH	1	
36	58724-79J00	REINF, DASH LWR LH	1	

FIG.590D

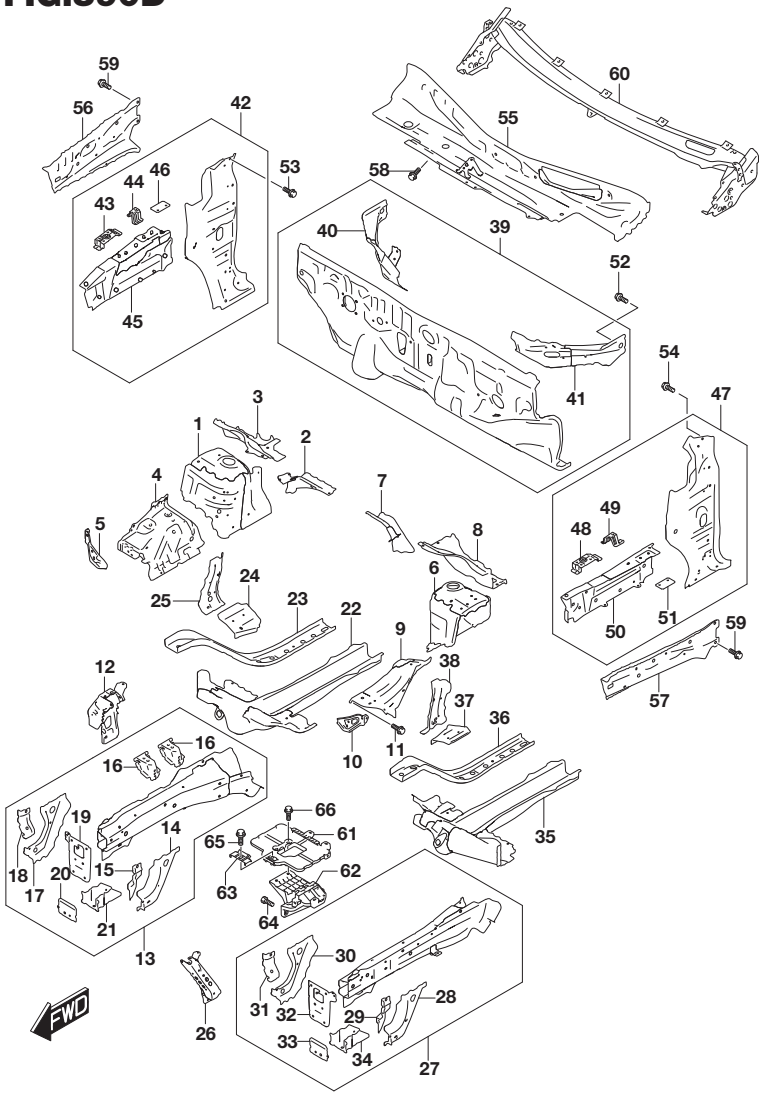

FIG.590D (3-F-8) FRONT BODY PANEL (RHD:W/EASS)

REF NO.	PART NO.	DESCRIPTION	Q'TY	REMARKS
37	58751-61M00	REINF, APRON SIDE RR LH	1	
38	58771-61MA0	SUPPORT, FR STRUT LH	1	
39	59100-61MA0	PANEL, DASH	1	
40	59140-61M00	.REINF, DASH PANEL SIDE RH	1	
41	59150-61M00	.REINF, DASH PANEL SIDE LH	1	
42	59230-54P01	PANEL, DASH SIDE RH	1	
43	59234-54P01	.BRACKET, FR FNDR RH	1	
44	59235-54P00	.BRACKET, FR FNDR RR RH	1	
45	59240-54P00	.PANEL, DASH SIDE FR RH	1	
46	59744-79J00	.PATCH, FR HOOD HINGE	1	
47	59280-54P01	PANEL, DASH SIDE LH	1	
48	59284-54P01	.BRACKET, FR FNDR LH	1	
49	59285-54P00	.BRACKET, FR FNDR RR LH	1	
50	59290-54P00	.PANEL, DASH SIDE FR LH	1	
51	59744-79J00	.PATCH, FR HOOD HINGE	1	
52	01550-0612A	BOLT	2	
53	01550-0612A	BOLT	2	
54	01550-0612A	BOLT	2	
55	59300-54P40	PANEL, COWL UPPER	1	
56	59411-54P00	MEMBER, COWL SIDE OUTER RH	1	
57	59461-54P00	MEMBER, COWL SIDE OUTER LH	1	
58	01550-0612A	BOLT	2	
59	01551-0820A	BOLT	4	
60-1	59700-54P00	PANEL, COWL	1	N/SUNROOF
60-2	59700-54P10	PANEL, COWL	1	W/SUNROOF
61	72521-61M00	TRAY, BATTERY	1	
62	72522-61M00	BRACKET, BATTERY	1	
63	72524-83E10	BAND, BATTERY	1	
64	09118-08119	BOLT (8X25)	5	
65	01580-0825A	BOLT	1	
66	02162-0625A	SCREW	2	

FIG.600A

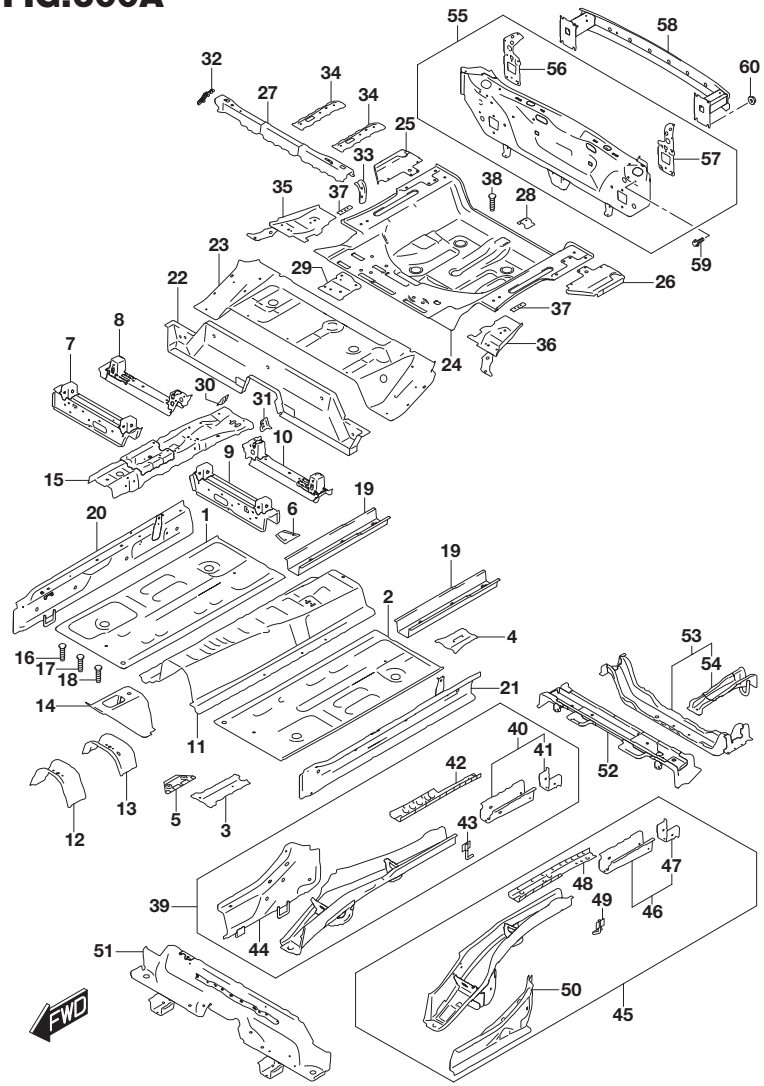

FIG.600A (3-F-9) FLOOR PANEL (2WD:N/EASS)

REF NO.	PART NO.	DESCRIPTION	Q'TY	REMARKS
1	61111-61MA2	PAN, MAIN FL RH	1	
2	61161-61MA2	PAN, MAIN FLOOR LH	1	
3	61112-61M00	REINF, MAIN FLR	1	
4	61113-61M00	REINF, MAIN FLR NO.2	1	
5	61114-61M00	REINF, MAIN FLR NO.3	1	
6	61115-61M00	REINF, MAIN FLR NO.4	1	
7	61130-54P00	CROSSMEMBER, FLR PAN UPR RH	1	
8	61140-54P10	CROSSMEMBER, FLR PAN RR RH	1	
9	61180-54P00	CROSSMEMBER, FLR PAN UPR LH	1	
10	61190-54P10	CROSSMEMBER, FLR PAN RR LH	1	
11	61211-54P00	TUNNEL, MAIN FLOOR	1	
12	61212-61M10	BRACE, MAIN FLR TUNNEL NO.1	1	
13	61213-61M00	BRACE, MAIN FLR TUNNEL NO.2	1	
14	61214-61M00	PANEL, MAIN FLR TUNNEL FR	1	
15	61220-61M00	REINF, MAIN FL TNL	1	
16	09119-05018	BOLT (5X14.3)	4	
17	09119-05018	BOLT (5X14.3)	4	
18	09119-05018	BOLT (5X14.3)	10	
19	61241-63J00	MEMBER, FL SIDE RR	2	
20	61310-86R00	PANEL, SIDE SILL INNER RH	1	
21	61320-86R00	PANEL, SIDE SILL INNER LH	1	
22	61511-79J00	PANEL, RR FLOOR FR	1	
23	61512-61M00	PANEL, RR FLR CTR	1	
24	61513-61M00	PANEL, RR FLR RR	1	
25-1	61514-61M00	EXTENSION, RR FLR SIDE RH	1	N/SUNROOF
25-2	61514-61M10	EXTENSION, RR FLR SIDE RH	1	W/SUNROOF
26-1	61515-61M00	EXTENSION, RR FLR SIDE LH	1	N/SUNROOF
26-2	61515-61M10	EXTENSION, RR FLR SIDE LH	1	W/SUNROOF
27	61516-61M00	MEMBER, RR SEAT SUPPORT	1	
28	61518-68L00	BRACKET, SPARE TIRE	1	

FIG.600B(3-F-12) FLOOR PANEL (2WD:W/EASS)
FIG.600C(3-F-14) FLOOR PANEL (4WD:N/EASS)
FIG.600D(3-G-2) FLOOR PANEL (4WD:W/EASS)

FIG.600A

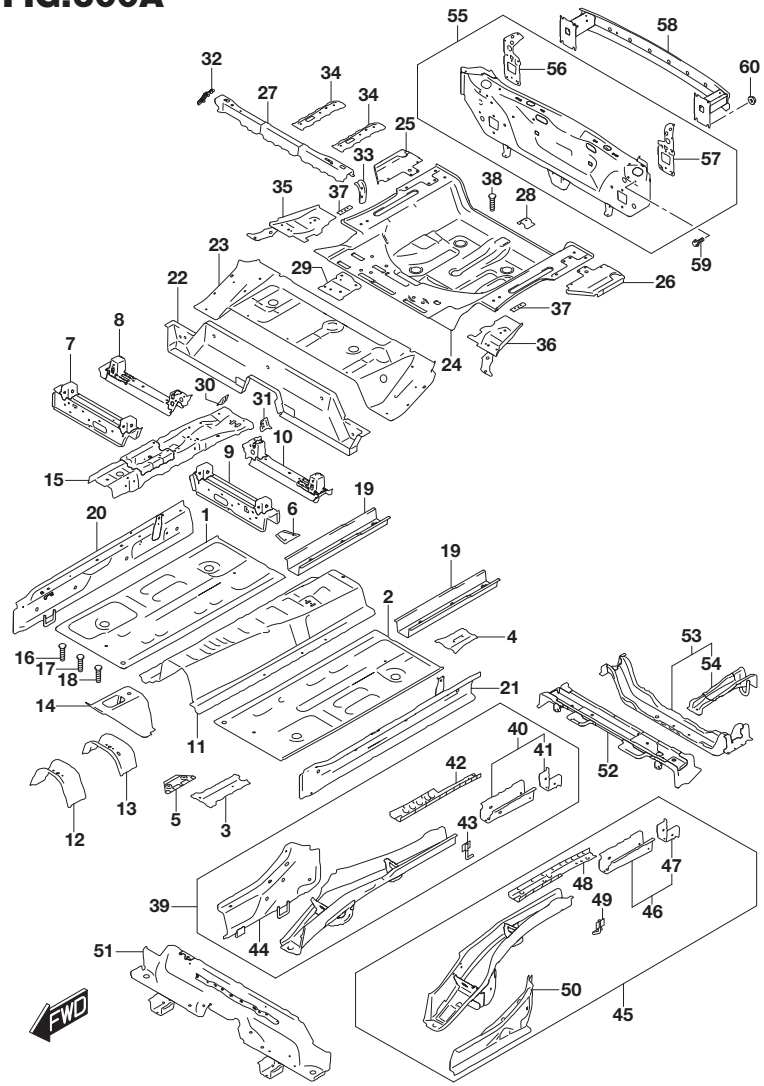

FIG.600A (3-F-10) FLOOR PANEL (2WD:N/EASS)

REF NO.	PART NO.	DESCRIPTION	Q'TY	REMARKS
29	61523-61M02	REINF, RR SEAT BELT ANCHOR NO.1	1	
30	61524-54P00	BRACKET, PARKING CABLE RH	1	
31	61525-54P00	BRACKET, PARKING CABLE LH	1	
32	61526-54P00	EXTENSION, RR SEAT SUPPORT RH	1	
33	61527-54P00	EXTENSION, RR SEAT SUPPORT LH	1	
34	61541-61M00	REINF, RR FLR CTR	2	
35	61550-61MA0	REINF, SEAT BELT SIDE RH	1	
36	61560-61MA0	REINF, SEAT BELT SIDE LH	1	
37	63314-63G00	REINFORCEMENT, ROOF RAIL BRKT	2	
38	09119-05018	BOLT (5X14.3)	4	
39	62100-54P00	MEMBER, RR FLR SIDE RH	1	
40	62110-61M00	.MEMBER, RR FLR SIDE RR	1	
41	62113-61M00	..REINF, RR FL SIDE MBR RR	1	
42	62126-61MA0	.REINF, RR FLOOR SIDE MBR RR RH	1	
43	62150-79J01	.HANGER, MUFFLER RR RH	1	
44	62210-54P00	.COMPARTMENT, RR FLR SIDE RH	1	
45	62300-54P01	MEMBER, RR FLOOR SIDE LH	1	
46	62110-61M00	.MEMBER, RR FLR SIDE RR	1	
47	62113-61M00	..REINF, RR FL SIDE MBR RR	1	
48	62326-61MA0	.REINF, RR FLOOR SIDE MBR RR LH	1	
49	62350-61M00	.HANGER, MUFFLER RR LH	1	
50	62410-54P00	.COMPARTMENT, RR FLR SIDE LH	1	
51-1	62600-54P00	CROSSMEMBER, RR FLR FR	1	TYPE 3
51-2	62600-53S00	CROSSMEMBER, RR FLR FR	1	TYPE 4
52	62700-61M02	CROSSMEMBER, RR FLR CTR	1	
53	62800-61M00	CROSSMEMBER, RR FLR RR	1	
54	62830-61M00	.HOOK, TOWING RR	1	
55-1	65500-86R00	PANEL, BACK	1	N/AEB CAMERA
55-2	65500-86R10	PANEL, BACK	1	W/AEB MONAURAL CAMERA
56	65514-54P00	.BRACKET, RR BUMPER MBR RH	1	
57	65515-54P00	.BRACKET, RR BUMPER MBR LH	1	
58	65560-61MA1	MEMBER, RR BUMPER	1	
59	01550-0612A	BOLT	6	

FIG.600A

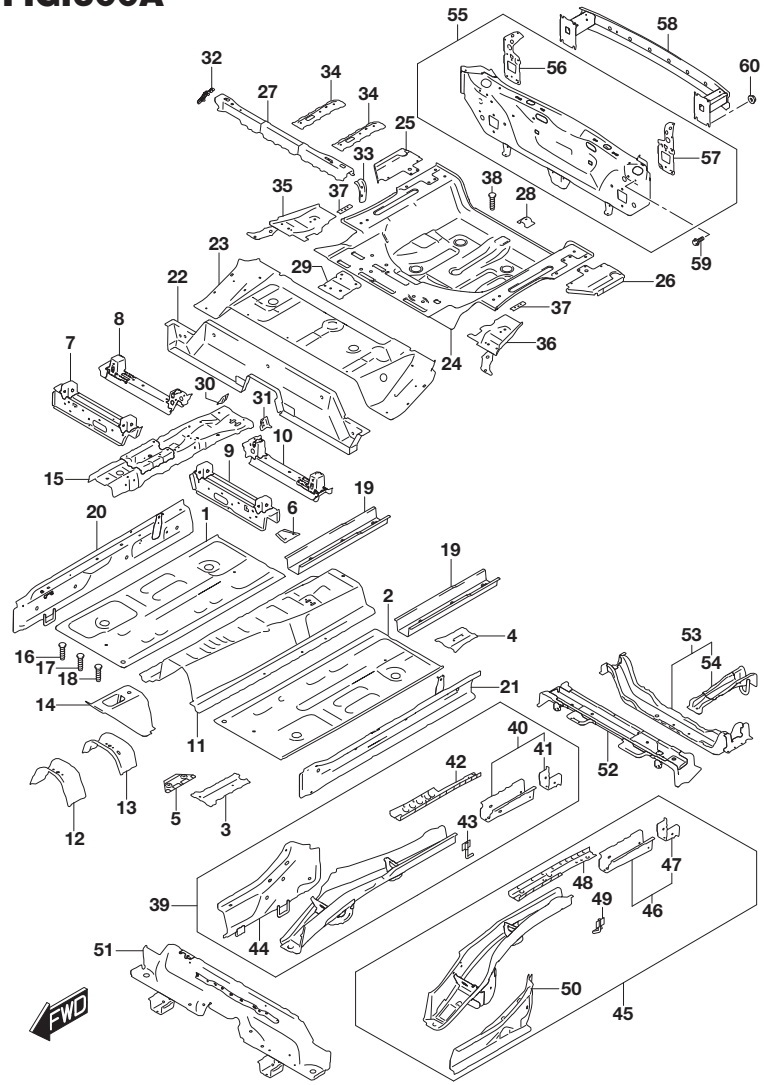

FIG.600A (3-F-11) FLOOR PANEL (2WD:N/EASS)

REF NO.	PART NO.	DESCRIPTION	Q'TY	REMARKS
60	08316-1008A	NUT	8	

FIG.600B

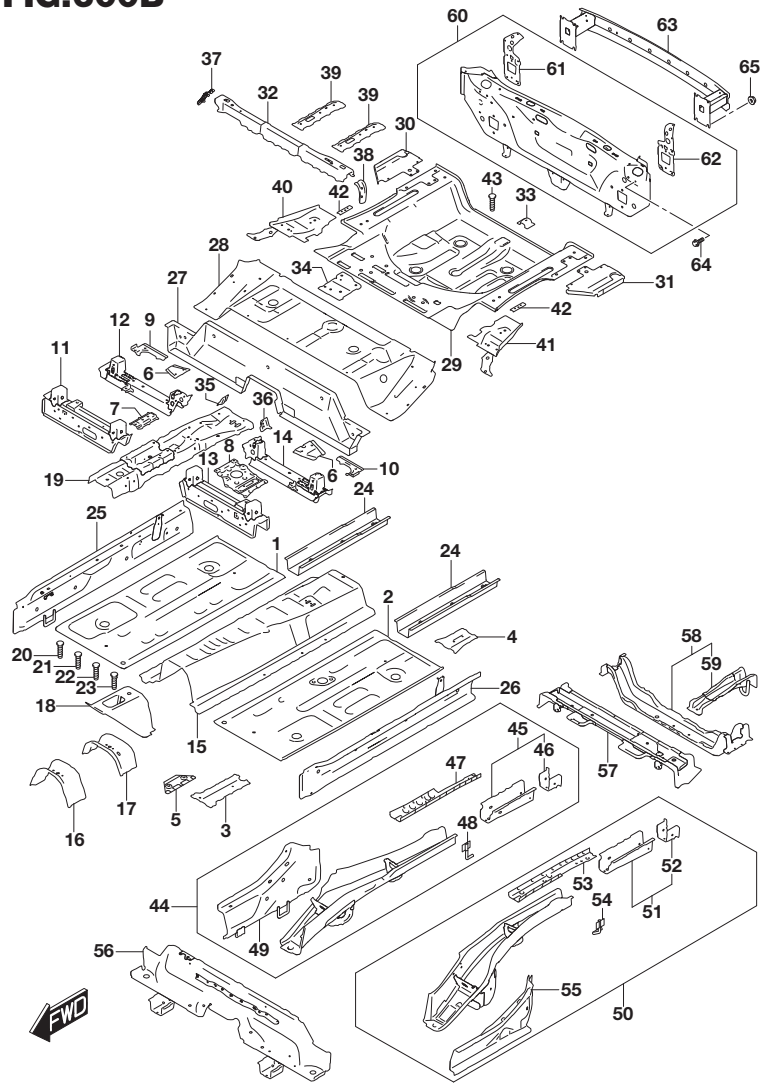

FIG.600B (3-F-12) FLOOR PANEL (2WD:W/EASS)

REF NO.	PART NO.	DESCRIPTION	Q'TY	REMARKS
1	61111-61MA2	PAN, MAIN FL RH	1	
2	61161-61MB2	PAN, MAIN FL LH	1	
3	61112-61M00	REINF, MAIN FLR	1	
4	61113-61M00	REINF, MAIN FLR NO.2	1	RHD
5	61114-61M00	REINF, MAIN FLR NO.3	1	
6	61115-61M00	REINF, MAIN FLR NO.4	2	
7	61116-53S00	BRACKET, BATTERY MTG INSIDE	1	
8	61117-53S00	REINF, MAIN FLOOR NO.2	1	
9	61118-53S00	PATCH, MAIN FLOOR RH	1	
10	61119-53S00	PATCH, MAIN FLOOR LH	1	
11	61130-53S00	CROSSMEMBER, FLR PAN UPR RH	1	
12	61140-53S00	CROSSMEMBER, FLR PAN RR RH	1	
13	61180-53S00	CROSSMEMBER, FLR PAN UPR LH	1	
14	61190-53S00	CROSSMEMBER, FLR PAN RR LH	1	
15	61211-54P00	TUNNEL, MAIN FLOOR	1	
16	61212-61M10	BRACE, MAIN FLR TUNNEL NO.1	1	
17	61213-53S00	BRACE, MAIN FLOOR TUNNEL NO.2	1	
18	61214-61M00	PANEL, MAIN FLR TUNNEL FR	1	
19	61220-53S00	REINF, MAIN FLOOR TUNNEL	1	
20	09119-05018	BOLT (5X14.3)	4	
21	09119-05018	BOLT (5X14.3)	4	
22	09119-05018	BOLT (5X14.3)	10	
23	09119-06094	BOLT	3	
24	61241-63J00	MEMBER, FL SIDE RR	2	
25	61310-86R00	PANEL, SIDE SILL INNER RH	1	
26	61320-86R00	PANEL, SIDE SILL INNER LH	1	
27	61511-79J00	PANEL, RR FLOOR FR	1	
28	61512-61M00	PANEL, RR FLR CTR	1	
29	61513-61M00	PANEL, RR FLR RR	1	
30-1	61514-61M00	EXTENSION, RR FLR SIDE RH	1	N/SUNROOF
30-2	61514-61M10	EXTENSION, RR FLR SIDE RH	1	W/SUNROOF
31-1	61515-61M00	EXTENSION, RR FLR SIDE LH	1	N/SUNROOF
31-2	61515-61M10	EXTENSION, RR FLR SIDE LH	1	W/SUNROOF
32	61516-61M00	MEMBER, RR SEAT SUPPORT	1	
33	61518-68L00	BRACKET, SPARE TIRE	1	

FIG.600B

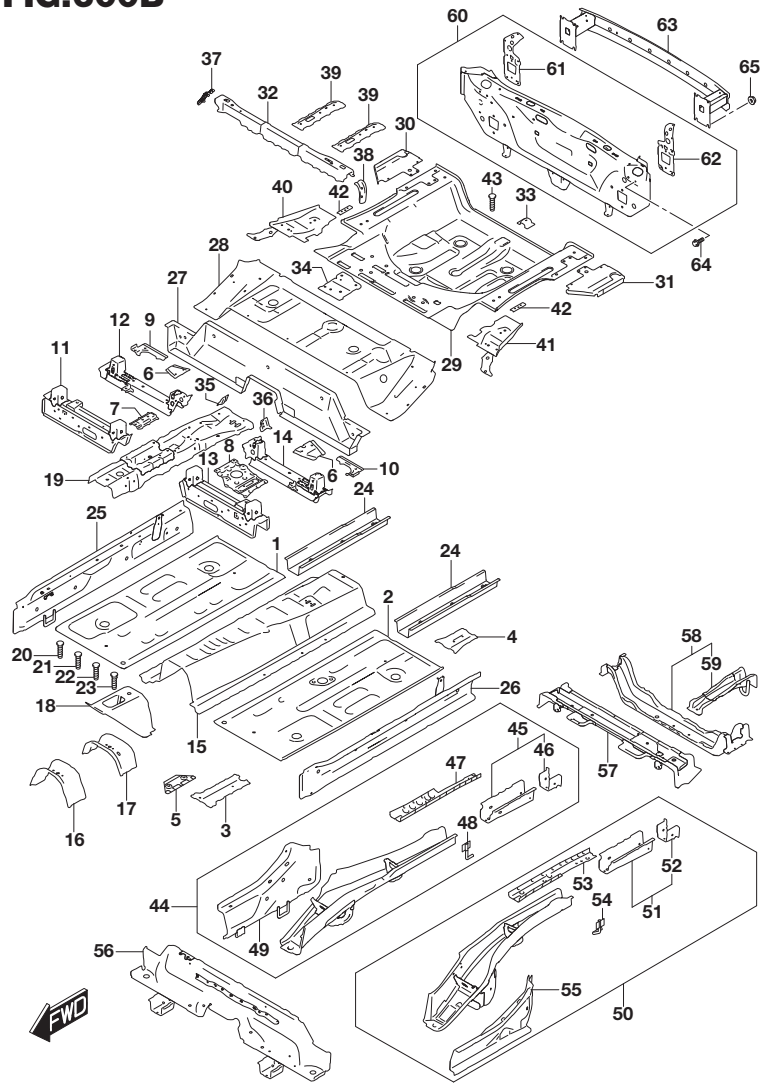

FIG.600B (3-F-13) FLOOR PANEL (2WD:W/EASS)

REF NO.	PART NO.	DESCRIPTION	Q'TY	REMARKS
34	61523-61M02	REINF, RR SEAT BELT ANCHOR NO.1	1	
35	61524-54P00	BRACKET, PARKING CABLE RH	1	
36	61525-54P00	BRACKET, PARKING CABLE LH	1	
37	61526-54P00	EXTENSION, RR SEAT SUPPORT RH	1	
38	61527-54P00	EXTENSION, RR SEAT SUPPORT LH	1	
39	61541-61M00	REINF, RR FLR CTR	2	
40	61550-61MA0	REINF, SEAT BELT SIDE RH	1	
41	61560-61MA0	REINF, SEAT BELT SIDE LH	1	
42	63314-63G00	REINFORCEMENT, ROOF RAIL BRKT	2	
43	09119-05018	BOLT (5X14.3)	4	
44	62100-54P00	MEMBER, RR FLR SIDE RH	1	
45	62110-61M00	.MEMBER, RR FLR SIDE RR	1	
46	62113-61M00	..REINF, RR FL SIDE MBR RR	1	
47	62126-61MA0	.REINF, RR FLOOR SIDE MBR RR RH	1	
48	62150-79J01	.HANGER, MUFFLER RR RH	1	
49	62210-54P00	.COMPARTMENT, RR FLR SIDE RH	1	
50	62300-54P01	MEMBER, RR FLOOR SIDE LH	1	
51	62110-61M00	.MEMBER, RR FLR SIDE RR	1	
52	62113-61M00	..REINF, RR FL SIDE MBR RR	1	
53	62326-61MA0	.REINF, RR FLOOR SIDE MBR RR LH	1	
54	62350-61M00	.HANGER, MUFFLER RR LH	1	
55	62410-54P00	.COMPARTMENT, RR FLR SIDE LH	1	
56	62600-53S00	CROSSMEMBER, RR FLR FR	1	
57	62700-61M02	CROSSMEMBER, RR FLR CTR	1	
58	62800-61M00	CROSSMEMBER, RR FLR RR	1	
59	62830-61M00	.HOOK, TOWING RR	1	
60-1	65500-86R00	PANEL, BACK	1	N/BLIND SPOT WARNING
60-2	65500-86R10	PANEL, BACK	1	W/BLIND SPOT WARNING
61	65514-54P00	.BRACKET, RR BUMPER MBR RH	1	
62	65515-54P00	.BRACKET, RR BUMPER MBR LH	1	
63	65560-61MA1	MEMBER, RR BUMPER	1	
64	01550-0612A	BOLT	6	
65	08316-1008A	NUT	8	

FIG.600C

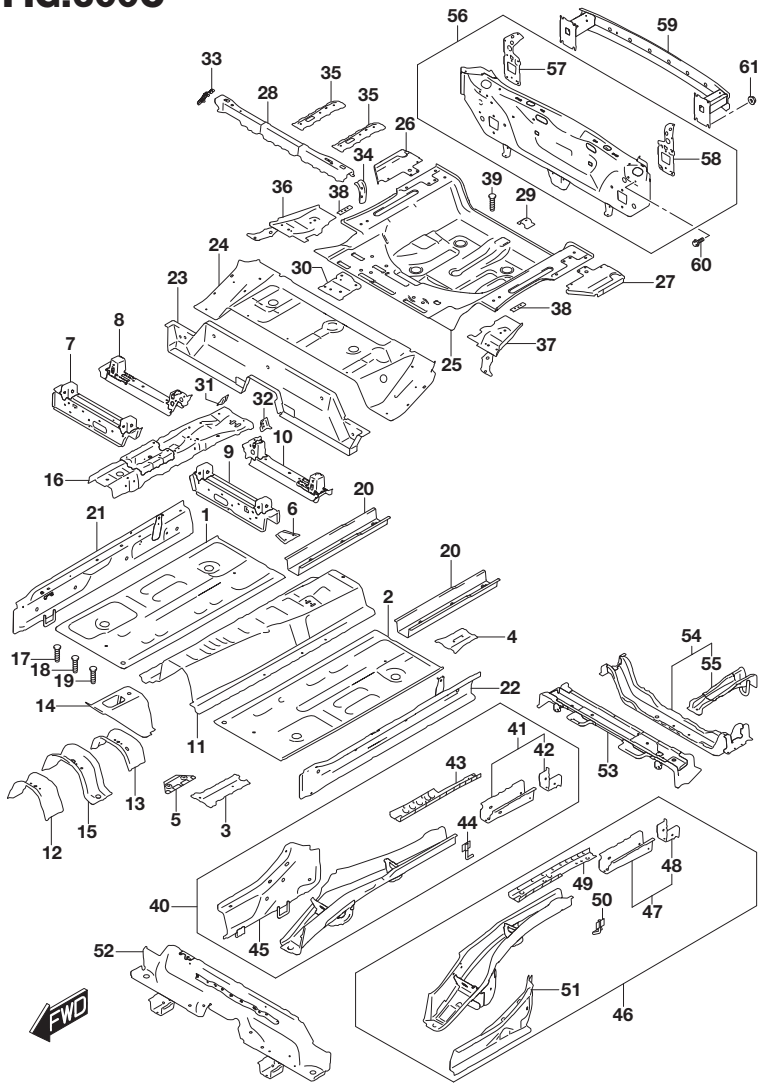

FIG.600C (3-F-14) FLOOR PANEL (4WD:N/EASS)

REF NO.	PART NO.	DESCRIPTION	Q'TY	REMARKS
1	61111-61MA2	PAN, MAIN FL RH	1	
2	61161-61MA2	PAN, MAIN FLOOR LH	1	
3	61112-61M00	REINF, MAIN FLR	1	
4	61113-61M00	REINF, MAIN FLR NO.2	1	
5	61114-61M00	REINF, MAIN FLR NO.3	1	
6	61115-61M00	REINF, MAIN FLR NO.4	1	
7	61130-54P00	CROSSMEMBER, FLR PAN UPR RH	1	
8	61140-54P10	CROSSMEMBER, FLR PAN RR RH	1	
9	61180-54P00	CROSSMEMBER, FLR PAN UPR LH	1	
10	61190-54P10	CROSSMEMBER, FLR PAN RR LH	1	
11	61211-54P00	TUNNEL, MAIN FLOOR	1	
12	61212-61M10	BRACE, MAIN FLR TUNNEL NO.1	1	
13	61213-61M00	BRACE, MAIN FLR TUNNEL NO.2	1	
14	61214-61M00	PANEL, MAIN FLR TUNNEL FR	1	
15	61215-61M10	BRACKET, PROP SHAFT MOUNT	1	
16	61220-61M00	REINF, MAIN FL TNL	1	
17	09119-05018	BOLT (5X14.3)	4	
18	09119-05018	BOLT (5X14.3)	4	
19	09119-05018	BOLT (5X14.3)	10	
20	61241-63J00	MEMBER, FL SIDE RR	2	
21	61310-86R00	PANEL, SIDE SILL INNER RH	1	
22	61320-86R00	PANEL, SIDE SILL INNER LH	1	
23	61511-79J00	PANEL, RR FLOOR FR	1	
24	61512-61M00	PANEL, RR FLR CTR	1	
25	61513-61M00	PANEL, RR FLR RR	1	
26-1	61514-61M00	EXTENSION, RR FLR SIDE RH	1	N/SUNROOF
26-2	61514-61M10	EXTENSION, RR FLR SIDE RH	1	W/SUNROOF
27-1	61515-61M00	EXTENSION, RR FLR SIDE LH	1	N/SUNROOF
27-2	61515-61M10	EXTENSION, RR FLR SIDE LH	1	W/SUNROOF
28	61516-61M00	MEMBER, RR SEAT SUPPORT	1	
29	61518-68L00	BRACKET, SPARE TIRE	1	
30	61523-61M02	REINF, RR SEAT BELT ANCHOR NO.1	1	
31	61524-54P00	BRACKET, PARKING CABLE RH	1	
32	61525-54P00	BRACKET, PARKING CABLE LH	1	
33	61526-54P00	EXTENSION, RR SEAT SUPPORT RH	1	

APK414-3 P22 600C
FLOOR PANEL (3)

FIG.600C

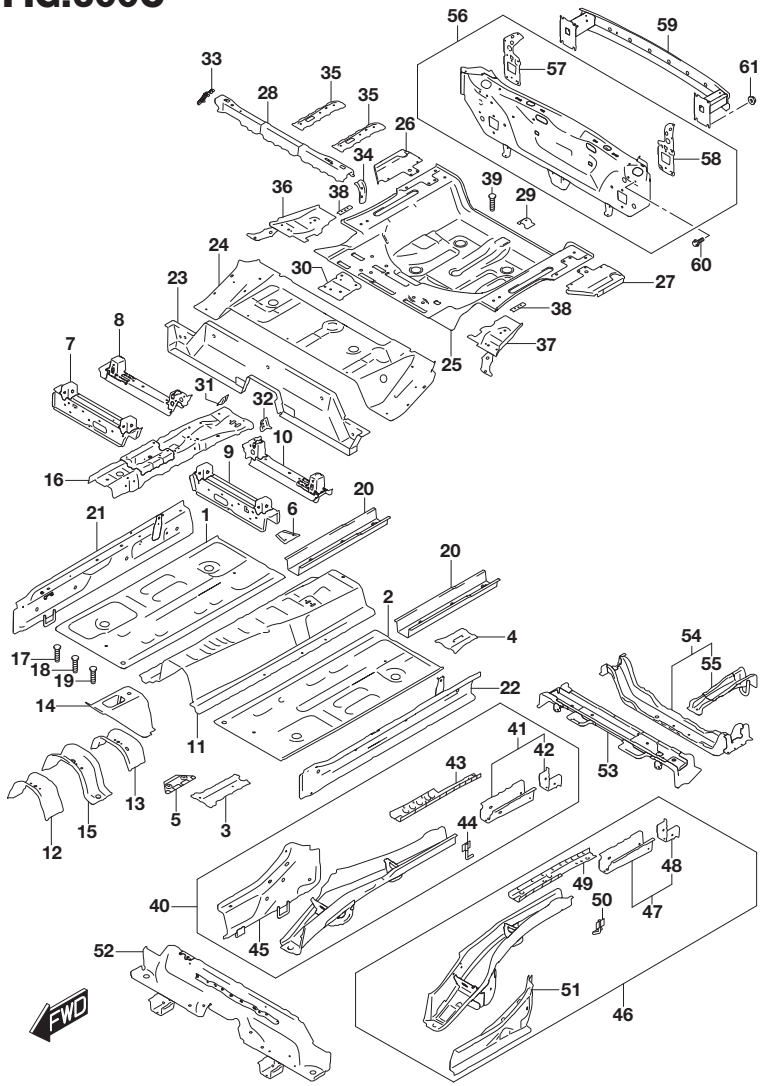

FIG.600C (3-F-15) FLOOR PANEL (4WD:N/EASS)

REF NO.	PART NO.	DESCRIPTION	Q'TY	REMARKS
34	61527-54P00	EXTENSION, RR SEAT SUPPORT LH	1	
35	61541-61M00	REINF, RR FLR CTR	2	
36	61550-61MA0	REINF, SEAT BELT SIDE RH	1	
37	61560-61MA0	REINF, SEAT BELT SIDE LH	1	
38	63314-63G00	REINFORCEMENT, ROOF RAIL BRKT	2	
39	09119-05018	BOLT (5X14.3)	4	
40	62100-54P00	MEMBER, RR FLR SIDE RH	1	
41	62110-61M00	.MEMBER, RR FLR SIDE RR	1	
42	62113-61M00	..REINF, RR FL SIDE MBR RR	1	
43	62126-61MA0	.REINF, RR FLOOR SIDE MBR RR RH	1	
44	62150-79J01	.HANGER, MUFFLER RR RH	1	
45	62210-54P00	.COMPARTMENT, RR FLR SIDE RH	1	
46	62300-54P01	MEMBER, RR FLOOR SIDE LH	1	
47	62110-61M00	.MEMBER, RR FLR SIDE RR	1	
48	62113-61M00	..REINF, RR FL SIDE MBR RR	1	
49	62326-61MA0	.REINF, RR FLOOR SIDE MBR RR LH	1	
50	62350-61M00	.HANGER, MUFFLER RR LH	1	
51	62410-54P00	.COMPARTMENT, RR FLR SIDE LH	1	
52-1	62600-54P00	CROSSMEMBER, RR FLR FR	1	TYPE 3
52-2	62600-53S00	CROSSMEMBER, RR FLR FR	1	TYPE 4
53	62700-61M12	CROSSMEMBER, RR FLR CTR	1	
54	62800-54P10	CROSSMEMBER, RR FLOOR RR	1	
55	62830-61M00	.HOOK, TOWING RR	1	
56-1	65500-86R00	PANEL, BACK	1	N/AEB CAMERA
56-2	65500-86R10	PANEL, BACK	1	W/AEB MONAURAL CAMERA
57	65514-54P00	.BRACKET, RR BUMPER MBR RH	1	
58	65515-54P00	.BRACKET, RR BUMPER MBR LH	1	
59	65560-61MA1	MEMBER, RR BUMPER	1	
60	01550-0612A	BOLT	6	
61	08316-1008A	NUT	8	

FIG.600D

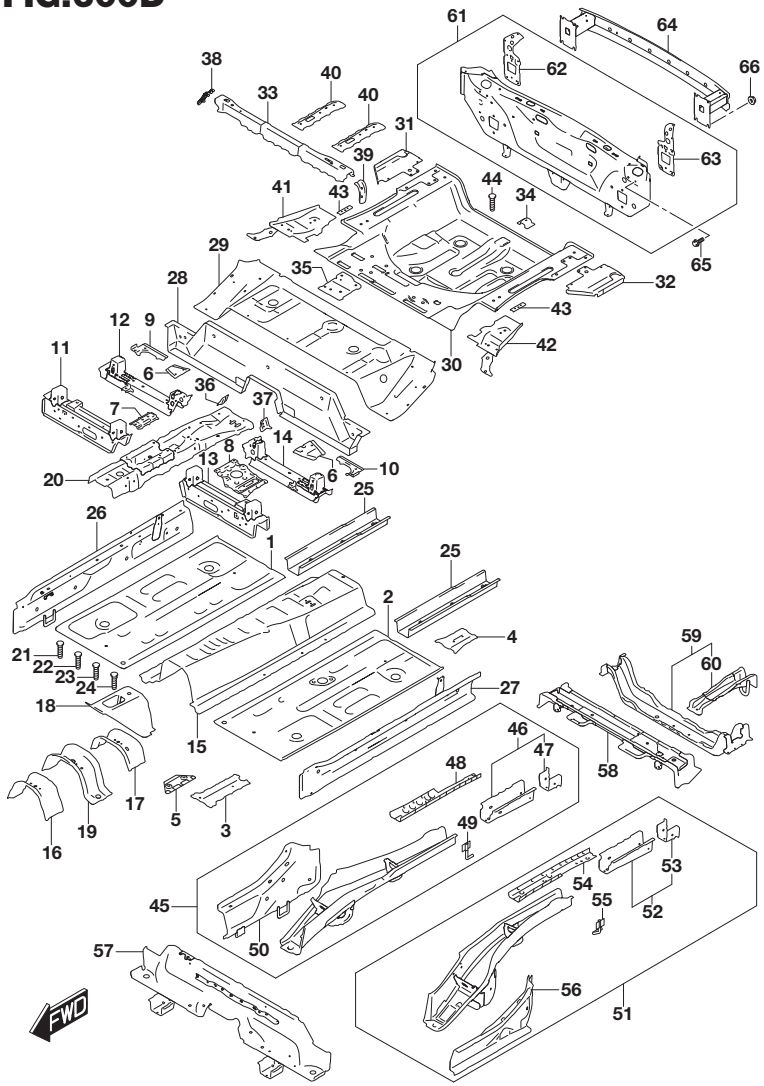

FIG.600D (3-G-2) FLOOR PANEL (4WD:W/EASS)

REF NO.	PART NO.	DESCRIPTION	Q'TY	REMARKS
1	61111-61MA2	PAN, MAIN FL RH	1	
2	61161-61MB2	PAN, MAIN FL LH	1	
3	61112-61M00	REINF, MAIN FLR	1	
4	61113-61M00	REINF, MAIN FLR NO.2	1	RHD
5	61114-61M00	REINF, MAIN FLR NO.3	1	
6	61115-61M00	REINF, MAIN FLR NO.4	2	
7	61116-53S00	BRACKET, BATTERY MTG INSIDE	1	
8	61117-53S00	REINF, MAIN FLOOR NO.2	1	
9	61118-53S00	PATCH, MAIN FLOOR RH	1	
10	61119-53S00	PATCH, MAIN FLOOR LH	1	
11	61130-53S00	CROSSMEMBER, FLR PAN UPR RH	1	
12	61140-53S00	CROSSMEMBER, FLR PAN RR RH	1	
13	61180-53S00	CROSSMEMBER, FLR PAN UPR LH	1	
14	61190-53S00	CROSSMEMBER, FLR PAN RR LH	1	
15	61211-54P00	TUNNEL, MAIN FLOOR	1	
16	61212-61M10	BRACE, MAIN FLR TUNNEL NO.1	1	
17	61213-53S00	BRACE, MAIN FLOOR TUNNEL NO.2	1	
18	61214-61M00	PANEL, MAIN FLR TUNNEL FR	1	
19	61215-61M10	BRACKET, PROP SHAFT MOUNT	1	
20	61220-53S00	REINF, MAIN FLOOR TUNNEL	1	
21	09119-05018	BOLT (5X14.3)	4	
22	09119-05018	BOLT (5X14.3)	4	
23	09119-05018	BOLT (5X14.3)	10	
24	09119-06094	BOLT	3	
25	61241-63J00	MEMBER, FL SIDE RR	2	
26	61310-86R00	PANEL, SIDE SILL INNER RH	1	
27	61320-86R00	PANEL, SIDE SILL INNER LH	1	
28	61511-79J00	PANEL, RR FLOOR FR	1	
29	61512-61M00	PANEL, RR FLR CTR	1	
30	61513-61M00	PANEL, RR FLR RR	1	
31-1	61514-61M00	EXTENSION, RR FLR SIDE RH	1	N/SUNROOF
31-2	61514-61M10	EXTENSION, RR FLR SIDE RH	1	W/SUNROOF
32-1	61515-61M00	EXTENSION, RR FLR SIDE LH	1	N/SUNROOF
32-2	61515-61M10	EXTENSION, RR FLR SIDE LH	1	W/SUNROOF
33	61516-61M00	MEMBER, RR SEAT SUPPORT	1	
34	61518-68L00	BRACKET, SPARE TIRE	1	

FIG.600D

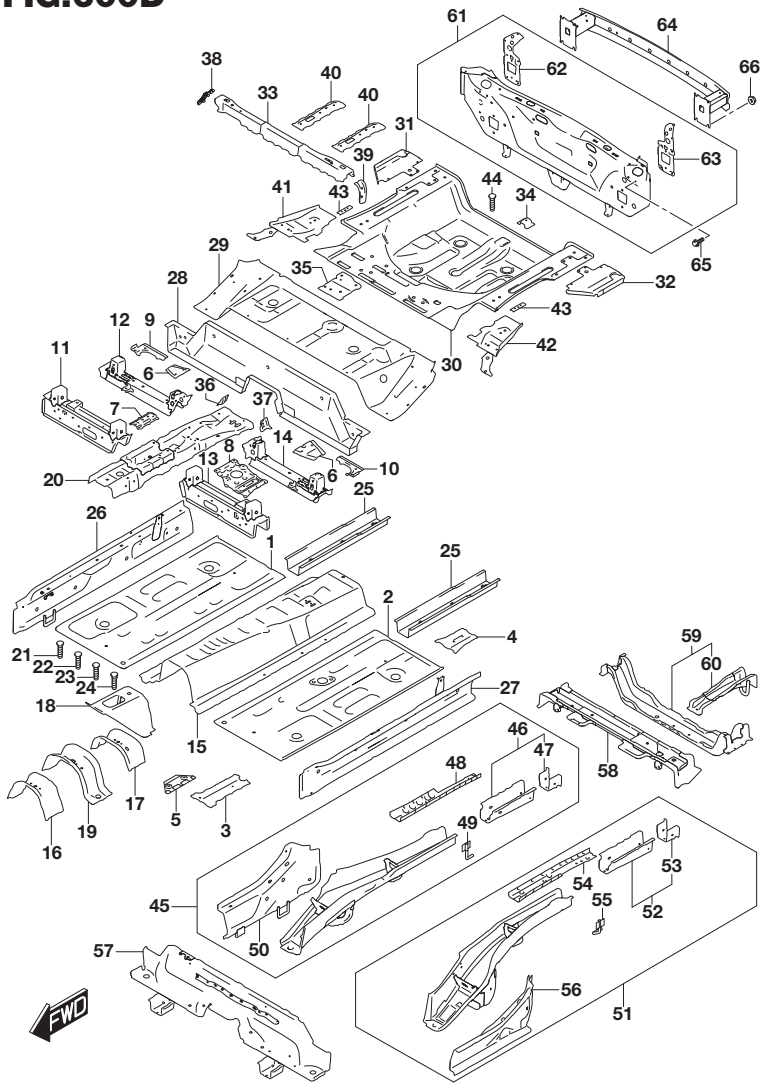

FIG.600D (3-G-3) FLOOR PANEL (4WD:W/EASS)

REF NO.	PART NO.	DESCRIPTION	Q'TY	REMARKS
35	61523-61M02	REINF, RR SEAT BELT ANCHOR NO.1	1	
36	61524-54P00	BRACKET, PARKING CABLE RH	1	
37	61525-54P00	BRACKET, PARKING CABLE LH	1	
38	61526-54P00	EXTENSION, RR SEAT SUPPORT RH	1	
39	61527-54P00	EXTENSION, RR SEAT SUPPORT LH	1	
40	61541-61M00	REINF, RR FLR CTR	2	
41	61550-61MA0	REINF, SEAT BELT SIDE RH	1	
42	61560-61MA0	REINF, SEAT BELT SIDE LH	1	
43	63314-63G00	REINFORCEMENT, ROOF RAIL BRKT	2	
44	09119-05018	BOLT (5X14.3)	4	
45	62100-54P00	MEMBER, RR FLR SIDE RH	1	
46	62110-61M00	.MEMBER, RR FLR SIDE RR	1	
47	62113-61M00	..REINF, RR FL SIDE MBR RR	1	
48	62126-61MA0	.REINF, RR FLOOR SIDE MBR RR RH	1	
49	62150-79J01	.HANGER, MUFFLER RR RH	1	
50	62210-54P00	.COMPARTMENT, RR FLR SIDE RH	1	
51	62300-54P01	MEMBER, RR FLOOR SIDE LH	1	
52	62110-61M00	.MEMBER, RR FLR SIDE RR	1	
53	62113-61M00	..REINF, RR FL SIDE MBR RR	1	
54	62326-61MA0	.REINF, RR FLOOR SIDE MBR RR LH	1	
55	62350-61M00	.HANGER, MUFFLER RR LH	1	
56	62410-54P00	.COMPARTMENT, RR FLR SIDE LH	1	
57	62600-53S00	CROSSMEMBER, RR FLR FR	1	
58	62700-61M12	CROSSMEMBER, RR FLR CTR	1	
59	62800-54P10	CROSSMEMBER, RR FLOOR RR	1	
60	62830-61M00	.HOOK, TOWING RR	1	
61	65500-86R10	PANEL, BACK	1	
62	65514-54P00	.BRACKET, RR BUMPER MBR RH	1	
63	65515-54P00	.BRACKET, RR BUMPER MBR LH	1	
64	65560-61MA1	MEMBER, RR BUMPER	1	
65	01550-0612A	BOLT	6	
66	08316-1008A	NUT	8	

FIG.640A

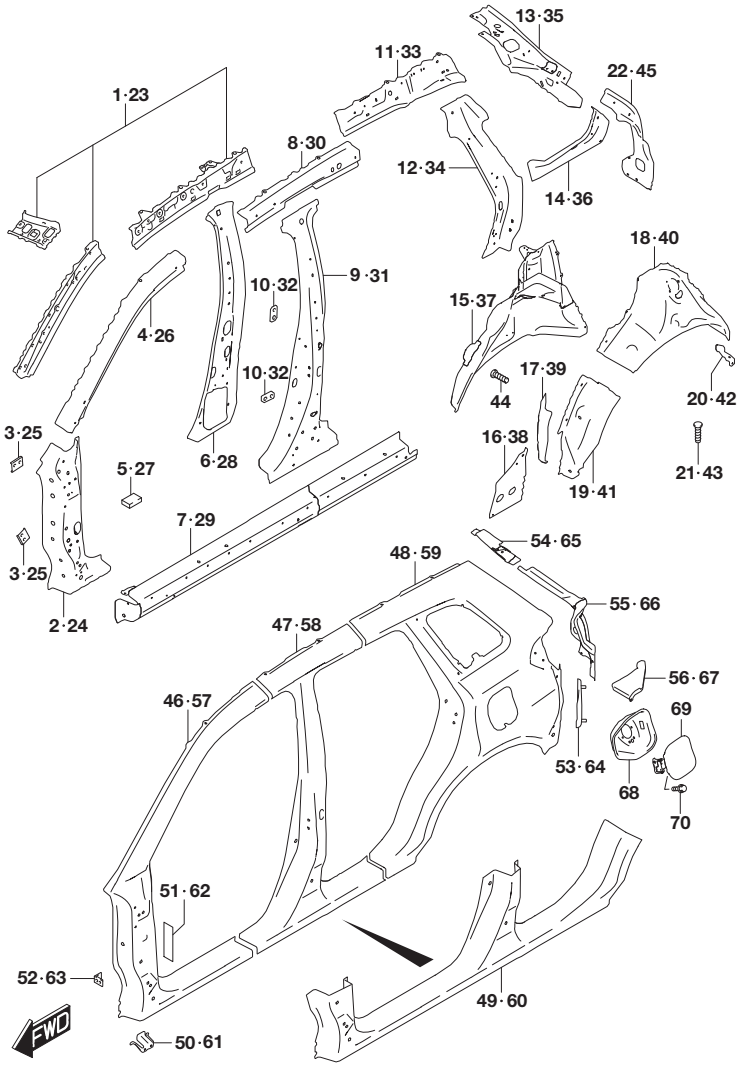

FIG.640A (3-G-4) SIDE BODY PANEL (TYPE 3)

REF NO.	PART NO.	DESCRIPTION	Q'TY	REMARKS
1-1	63110-54P10	PANEL, FR PILLAR INNER RH	1	LHD
1-2	63110-54P00	PANEL, FR PILLAR INNER RH	1	RHD
2	63140-54P00	REINF, FR DR HINGE RH	1	
3	63144-58J00	RETAINER, DR HINGE NO.1	2	
4	63151-54P00	REINF, FR PILLAR UPPER RH	1	
5	83921-82C00	PAD RH	4	
6	63211-54P00	PANEL, CTR PILLAR INNER RH	1	
7	63220-54P00	STRENGTH, SIDE SILL RH	1	
8	63231-54P00	REINF, ROOF SIDE RH	1	
9	63240-54P00	REINF, RR DR HINGE RH	1	
10	63243-72J00	RETAINER, RR DR HINGE	2	
11	63310-54P00	RAIL, ROOF SIDE INR RR RH	1	
12	63330-54P00	REINF, QTR INNER FR RH	1	
13	63340-54P00	EXTENSION, QTR INR UPR RH	1	
14	63361-54P00	MEMBER, QTR WINDOW LOWER RH	1	
15	63410-54P00	PANEL, WHEEL HOUSE INNER RH	1	
16	63431-61MA0	PANEL, SIDE SILL RR RH	1	
17	63432-61M00	REINF, RR WHEEL HOUSE FR RH	1	
18	63481-54P01	PANEL, WHEEL HOUSE OUTER RH	1	
19	63482-54P00	EXTENSION, WHEEL HOUSE OTR RH	1	
20	63483-54P00	BRACKET, RR BUMPER RH	1	
21	09119-05018	BOLT (5X14.3)	4	
22	63342-54P00	PANEL, LAMP HOUSE INNER RH	1	
23-1	63510-54P10	PANEL, FR PILLAR INNER LH	1	LHD
23-2	63510-54P00	PANEL, FR PILLAR INNER LH	1	RHD
24	63540-54P00	REINF, FR DR HINGE LH	1	
25	63144-58J00	RETAINER, DR HINGE NO.1	2	
26	63551-54P00	REINF, FR PILLAR UPPER LH	1	
27	83921-82C00	PAD LH	4	
28	63611-54P00	PANEL, CTR PILLAR INNER LH	1	
29	63620-54P00	STRENGTH, SIDE SILL LH	1	
30	63631-54P00	REINF, ROOF SIDE LH	1	
31	63640-54P00	REINF, RR DR HINGE LH	1	
32	63243-72J00	RETAINER, RR DR HINGE	2	
33	63710-54P00	RAIL, ROOF SIDE INR RR LH	1	
34	63730-54P00	REINF, QTR INNER FR LH	1	

FIG.640A

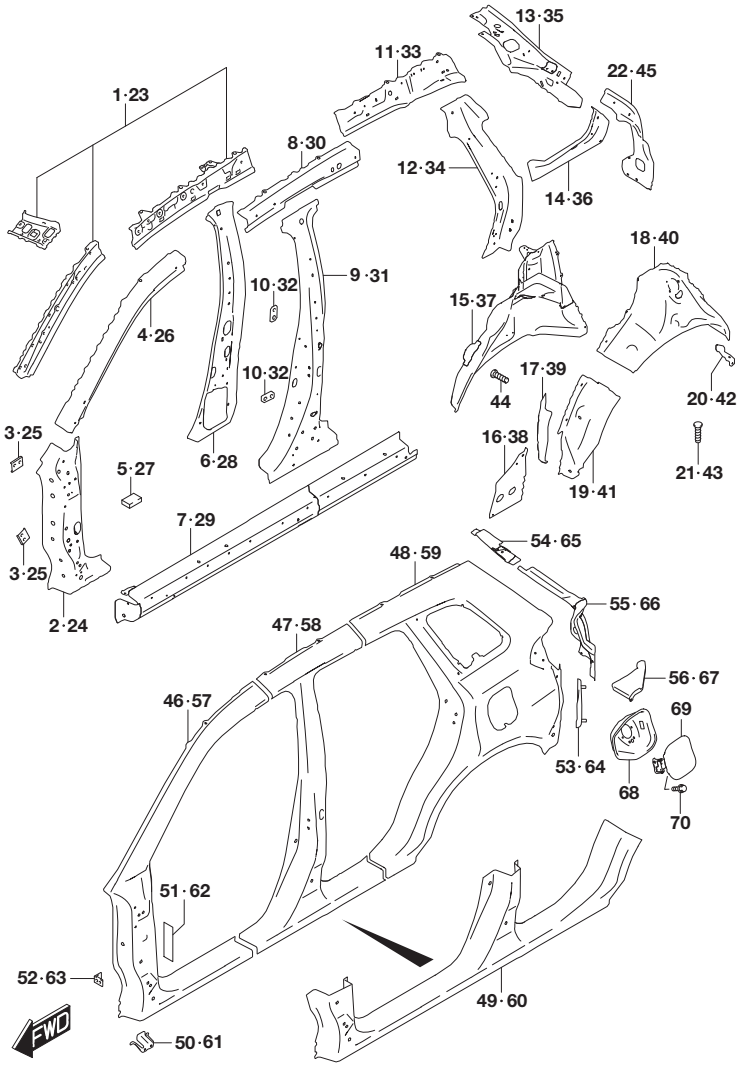

FIG.640A (3-G-5) SIDE BODY PANEL (TYPE 3)

REF NO.	PART NO.	DESCRIPTION	Q'TY	REMARKS
35	63740-54P00	EXTENSION, QTR INR UPR LH	1	
36	63761-54P00	MEMBER, QTR WINDOW LOWER LH	1	
37	63810-54P00	PANEL, WHEEL HOUSE INNER LH	1	
38	63831-61MA0	PANEL, SIDE SILL RR LH	1	
39	63832-61M00	REINF, RR WHEEL HOUSE FR LH	1	
40	63881-54P01	PANEL, WHEEL HOUSE OUTER LH	1	
41	63882-54P00	EXTENSION, WHEEL HOUSE OTR LH	1	
42	63883-54P00	BRACKET, RR BUMPER LH	1	
43	09119-05018	BOLT (5X14.3)	4	
44	09119-05018	BOLT (5X14.3)	2	K14D
45	63742-54P00	PANEL, LAMP HOUSE INNER LH	1	
46	64111-54P01-P11	PANEL, A-PILLAR RH	1	
47	64111-54P01-P21	PANEL, B-PILLAR RH	1	
48	64111-54P01-P31	PANEL, QUARTER RH	1	
49	64111-54P01-P41	PANEL, SIDE SILL RH	1	
50	64112-54P00	BRACKET, FR FENDER LOWER RH	1	
51	64113-61M00	SHEET, SIDE BODY OTR FR RH	2	
52	64113-63J00	BRACKET, FR FNDR RH	1	
53	64114-86R00	BRACKET, BLIND SPOT SENSOR RH	1	W/BLIND SPOT WARNING
54	64120-54P00	EXTENSION, SIDE BODY OTR RH	1	
55	64130-54P00	PANEL, RR LAMP HOUSE OTR RH	1	
56	64141-54P00	EXTENSION, SIDE BODY OTR LWR RH	1	
57	64511-54P01-P11	PANEL, A-PILLAR LH	1	
58	64511-54P01-P21	PANEL, B-PILLAR LH	1	
59	64511-54P01-P31	PANEL, QUARTER LH	1	
60	64511-54P01-P41	PANEL, SIDE SILL LH	1	
61	64512-54P00	BRACKET, FR FENDER LOWER LH	1	
62	64113-61M00	SHEET, SIDE BODY OTR FR LH	2	
63	64113-63J00	BRACKET, FR FNDR LH	1	
64	64514-86R00	BRACKET, BLIND SPOT SENSOR LH	1	W/BLIND SPOT WARNING
65	64520-54P00	EXTENSION, SIDE BODY OTR LH	1	
66	64530-54P00	PANEL, RR LAMP HOUSE OTR LH	1	
67	64541-54P00	EXTENSION, SIDE BODY OTR LWR LH	1	
68	64571-54P00	BOX, FUEL FILLER LH	1	

FIG.640A

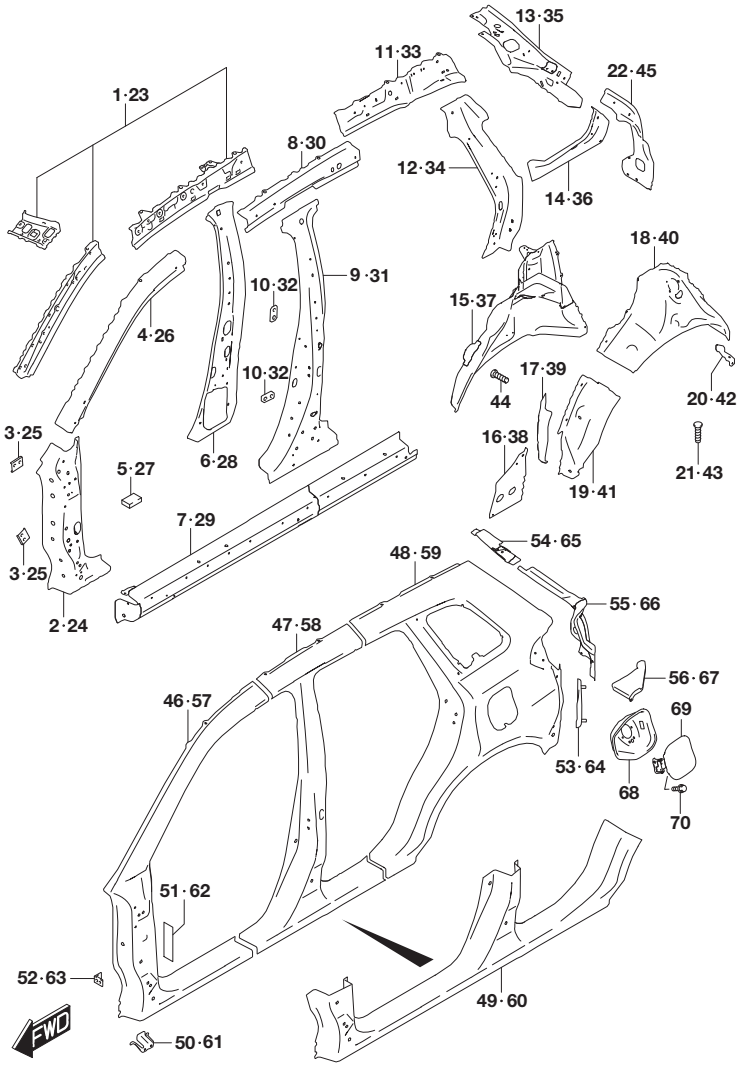

FIG.640A (3-G-6) SIDE BODY PANEL (TYPE 3)

REF NO.	PART NO.	DESCRIPTION	Q'TY	REMARKS
69	64850-54P00	DR, FUEL FILLER LH	1	
70	01550-0612A	BOLT	2	

FIG.640B

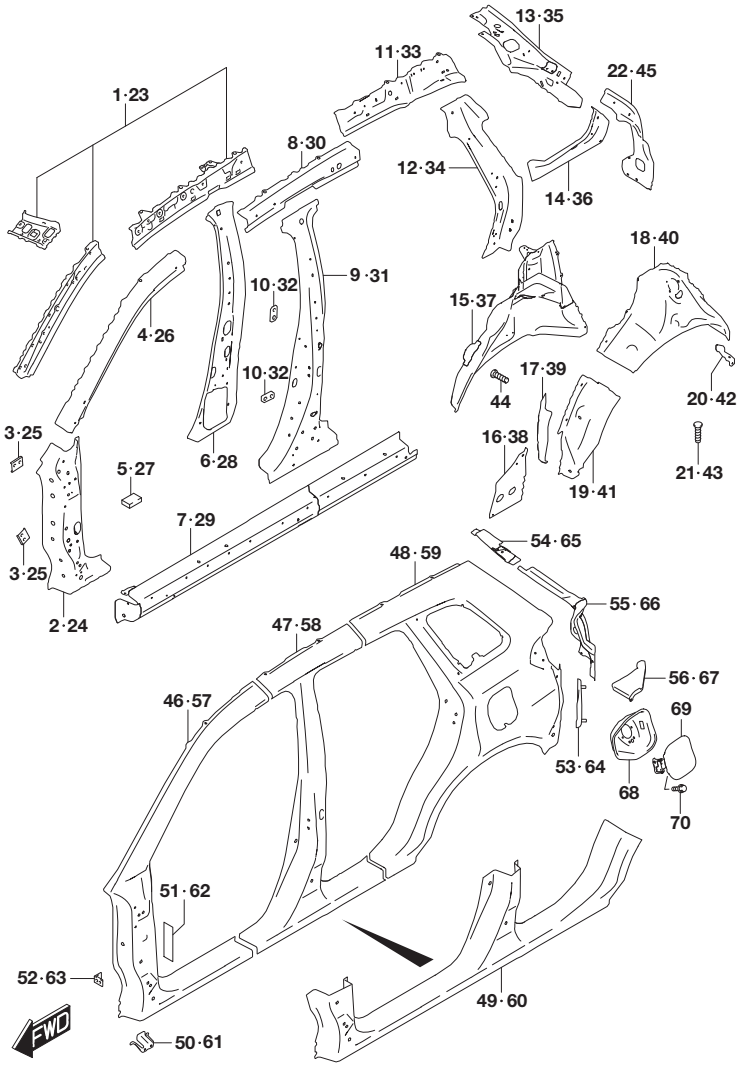

FIG.640B (3-G-7) SIDE BODY PANEL (TYPE 4)

REF NO.	PART NO.	DESCRIPTION	Q'TY	REMARKS
1-1	63110-54P10	PANEL, FR PILLAR INNER RH	1	LHD
1-2	63110-54P00	PANEL, FR PILLAR INNER RH	1	RHD
2	63140-54P00	REINF, FR DR HINGE RH	1	
3	63144-58J00	RETAINER, DR HINGE NO.1	2	
4	63151-54P00	REINF, FR PILLAR UPPER RH	1	
5	83921-82C00	PAD RH	4	
6	63211-54P00	PANEL, CTR PILLAR INNER RH	1	
7	63220-54P00	STRENGTH, SIDE SILL RH	1	
8	63231-54P00	REINF, ROOF SIDE RH	1	
9	63240-54P00	REINF, RR DR HINGE RH	1	
10	63243-72J00	RETAINER, RR DR HINGE	2	
11	63310-54P00	RAIL, ROOF SIDE INR RR RH	1	
12	63330-54P00	REINF, QTR INNER FR RH	1	
13	63340-54P00	EXTENSION, QTR INR UPR RH	1	
14	63361-54P00	MEMBER, QTR WINDOW LOWER RH	1	
15	63410-54P00	PANEL, WHEEL HOUSE INNER RH	1	
16	63431-61MA0	PANEL, SIDE SILL RR RH	1	
17	63432-61M00	REINF, RR WHEEL HOUSE FR RH	1	
18	63481-54P01	PANEL, WHEEL HOUSE OUTER RH	1	
19	63482-54P00	EXTENSION, WHEEL HOUSE OTR RH	1	
20	63483-54P00	BRACKET, RR BUMPER RH	1	
21	09119-05018	BOLT (5X14.3)	4	
22	63342-54P00	PANEL, LAMP HOUSE INNER RH	1	
23-1	63510-54P10	PANEL, FR PILLAR INNER LH	1	LHD
23-2	63510-54P00	PANEL, FR PILLAR INNER LH	1	RHD
24	63540-54P00	REINF, FR DR HINGE LH	1	
25	63144-58J00	RETAINER, DR HINGE NO.1	2	
26	63551-54P00	REINF, FR PILLAR UPPER LH	1	
27	83921-82C00	PAD LH	4	
28	63611-54P00	PANEL, CTR PILLAR INNER LH	1	
29	63620-54P00	STRENGTH, SIDE SILL LH	1	
30	63631-54P00	REINF, ROOF SIDE LH	1	
31	63640-54P00	REINF, RR DR HINGE LH	1	
32	63243-72J00	RETAINER, RR DR HINGE	2	
33	63710-54P00	RAIL, ROOF SIDE INR RR LH	1	
34	63730-54P00	REINF, QTR INNER FR LH	1	

FIG.640B

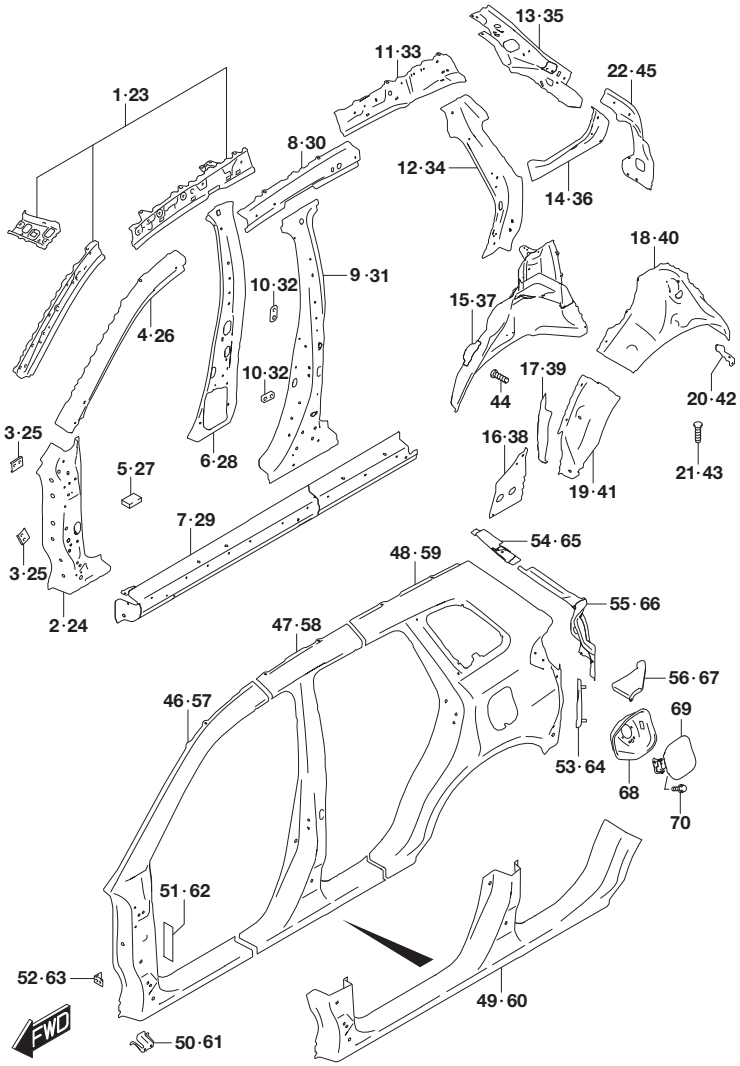

FIG.640B (3-G-8) SIDE BODY PANEL (TYPE 4)

REF NO.	PART NO.	DESCRIPTION	Q'TY	REMARKS
35	63740-54P00	EXTENSION, QTR INR UPR LH	1	
36	63761-54P00	MEMBER, QTR WINDOW LOWER LH	1	
37	63810-54P00	PANEL, WHEEL HOUSE INNER LH	1	
38	63831-61MA0	PANEL, SIDE SILL RR LH	1	
39	63832-61M00	REINF, RR WHEEL HOUSE FR LH	1	
40	63881-54P01	PANEL, WHEEL HOUSE OUTER LH	1	
41	63882-54P00	EXTENSION, WHEEL HOUSE OTR LH	1	
42	63883-54P00	BRACKET, RR BUMPER LH	1	
43	09119-05018	BOLT (5X14.3)	4	
44	09119-05018	BOLT (5X14.3)	2	
45	63742-54P00	PANEL, LAMP HOUSE INNER LH	1	
46	64111-54P01-P11	PANEL, A-PILLAR RH	1	
47	64111-54P01-P21	PANEL, B-PILLAR RH	1	
48	64111-54P01-P31	PANEL, QUARTER RH	1	
49	64111-54P01-P41	PANEL, SIDE SILL RH	1	
50	64112-54P00	BRACKET, FR FENDER LOWER RH	1	
51	64113-61M00	SHEET, SIDE BODY OTR FR RH	2	
52	64113-63J00	BRACKET, FR FNDR RH	1	
53	64114-86R00	BRACKET, BLIND SPOT SENSOR RH	1	W/BLIND SPOT WARNING
54	64120-54P00	EXTENSION, SIDE BODY OTR RH	1	
55	64130-54P00	PANEL, RR LAMP HOUSE OTR RH	1	
56	64141-54P00	EXTENSION, SIDE BODY OTR LWR RH	1	
57	64511-54P01-P11	PANEL, A-PILLAR LH	1	
58	64511-54P01-P21	PANEL, B-PILLAR LH	1	
59	64511-54P01-P31	PANEL, QUARTER LH	1	
60	64511-54P01-P41	PANEL, SIDE SILL LH	1	
61	64512-54P00	BRACKET, FR FENDER LOWER LH	1	
62	64113-61M00	SHEET, SIDE BODY OTR FR LH	2	
63	64113-63J00	BRACKET, FR FNDR LH	1	
64	64514-86R00	BRACKET, BLIND SPOT SENSOR LH	1	W/BLIND SPOT WARNING
65	64520-54P00	EXTENSION, SIDE BODY OTR LH	1	
66	64530-54P00	PANEL, RR LAMP HOUSE OTR LH	1	
67	64541-54P00	EXTENSION, SIDE BODY OTR LWR LH	1	
68	64571-54P00	BOX, FUEL FILLER LH	1	

FIG.640B

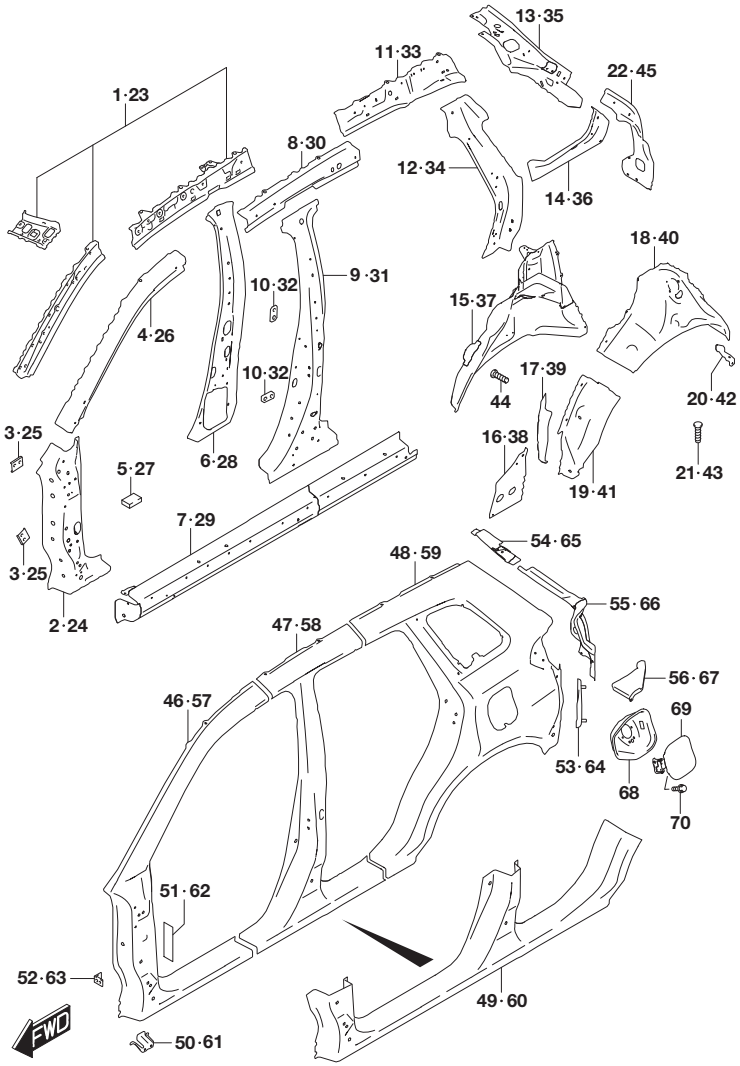

FIG.640B (3-G-9) SIDE BODY PANEL (TYPE 4)

REF NO.	PART NO.	DESCRIPTION	Q'TY	REMARKS
69	64850-54P00	DR, FUEL FILLER LH	1	
70	01550-0612A	BOLT	2	

FIG.660A

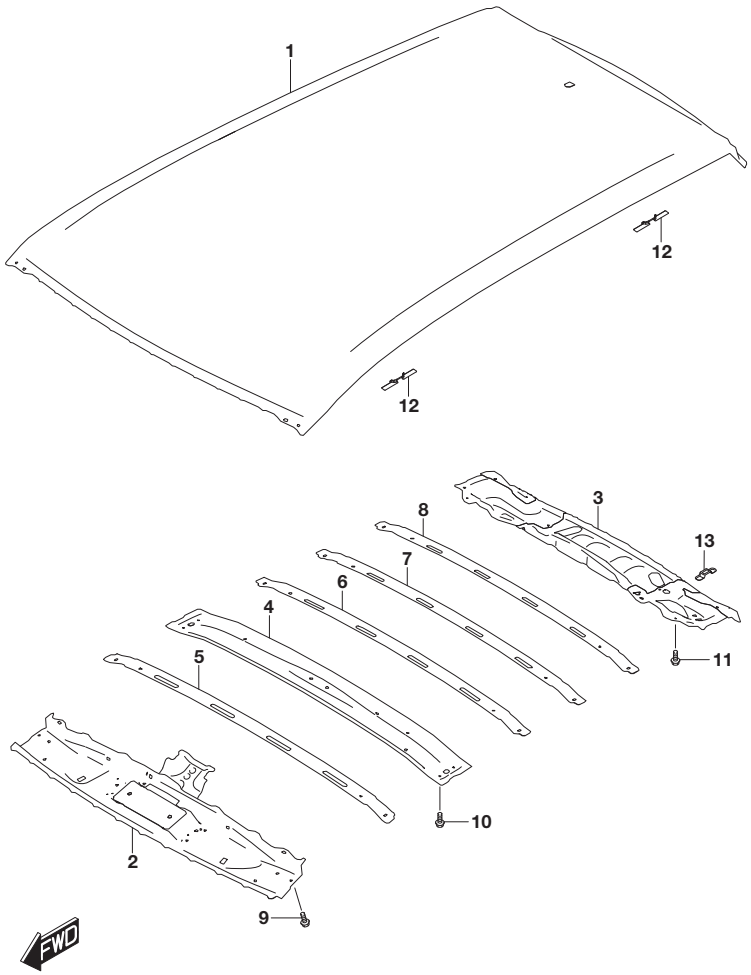

FIG.660A (3-G-10) ROOF PANEL (N/SUNROOF)

REF NO.	PART NO.	DESCRIPTION	Q'TY	REMARKS
1	65111-54P10	PANEL, ROOF	1	
2	65120-55P10	MEMBER, ROOF FR INNER	1	
3	65130-54P00	MEMBER, ROOF BACK INNER	1	
4	65150-54P00	MEMBER, ROOF PANEL CTR	1	
5	65161-54P00	MEMBER, ROOF PANEL NO.1	1	
6	65162-54P00	MEMBER, ROOF PANEL NO.2	1	
7	65163-54P00	MEMBER, ROOF PANEL NO.3	1	
8	65164-54P00	MEMBER, ROOF PANEL NO.4	1	
9	01550-0612A	BOLT	2	
10	01550-0612A	BOLT	4	
11	01550-0612A	BOLT	4	
12	65171-63J00	BRACKET, ROOF CARRIER	4	N/ROOF RAIL
13	65112-61MA0	BRACKET, ROOF RAIL	2	W/ROOF RAIL

APK414-3 P22 660A
ROOF PANEL (1)

FIG.660B

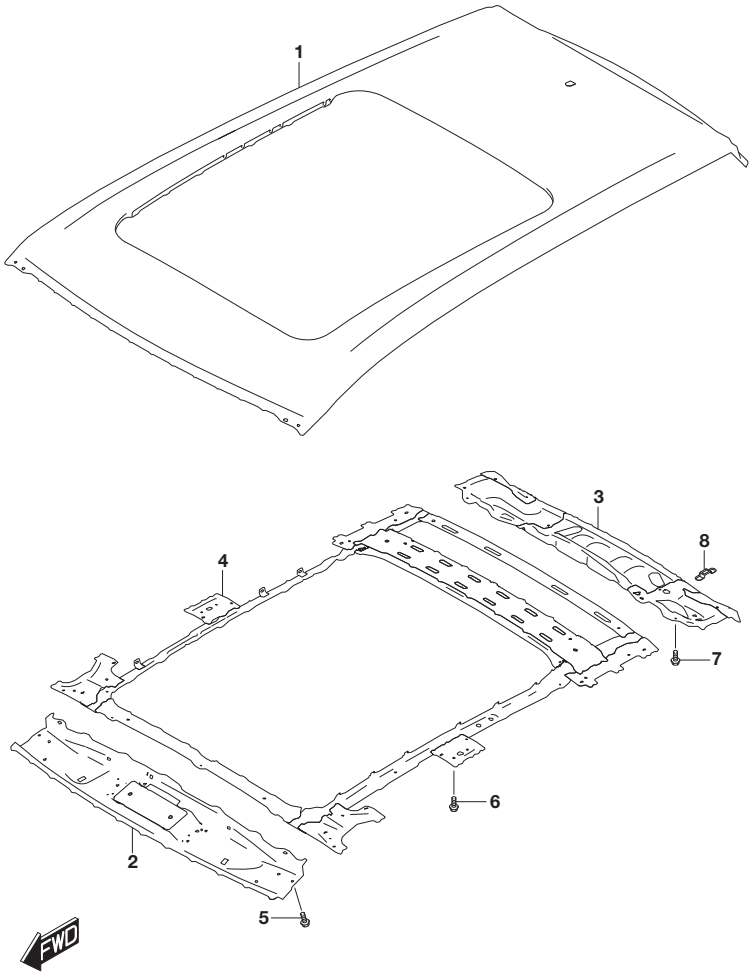

FIG.660B (3-G-11) ROOF PANEL (W/SUNROOF)

REF NO.	PART NO.	DESCRIPTION	Q'TY	REMARKS
1	65111-54PV0	PANEL, ROOF	1	
2	65120-54P50	MEMBER, ROOF FR INNER	1	
3	65130-54P00	MEMBER, ROOF BACK INNER	1	
4	65170-54P50	REINF, SLIDING ROOF	1	
5	01550-0612A	BOLT	2	
6	01550-0612A	BOLT	4	
7	01550-0612A	BOLT	4	
8	65112-61MA0	BRACKET, ROOF RAIL	2	

APK414-3 P22 660B
ROOF PANEL (2)

FIG.717A

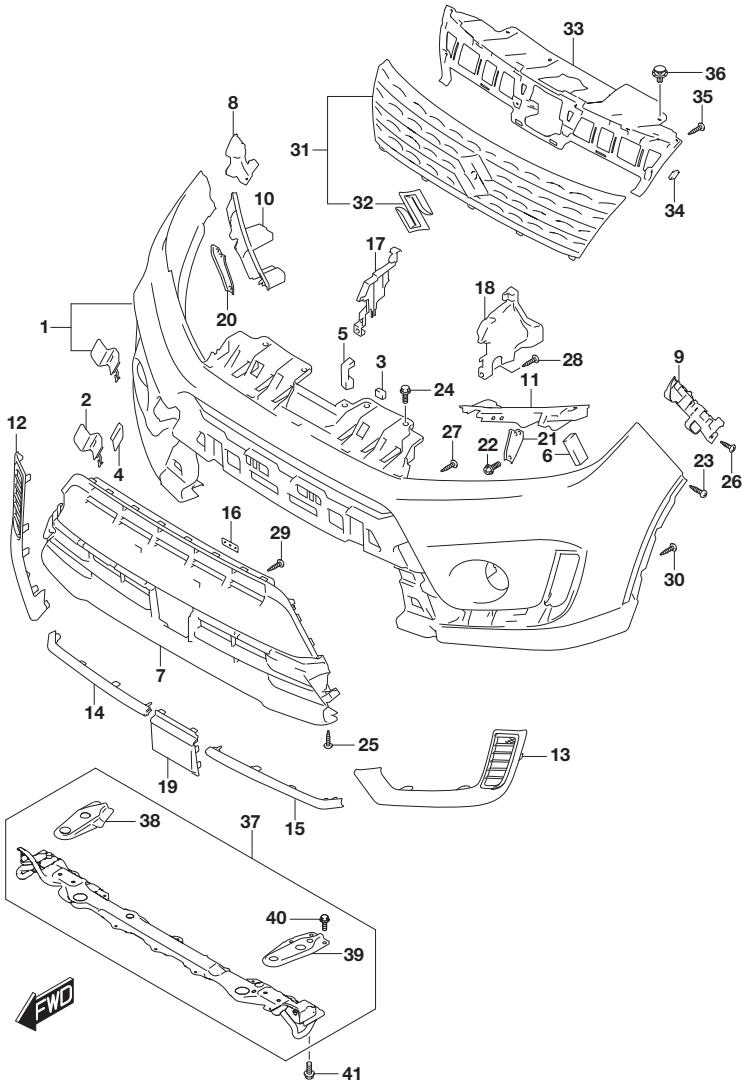

FIG.717A (3-G-12) FRONT BUMPER (N/AEB CAMERA:N/FRONT FOG LAMP)

REF NO.	PART NO.	DESCRIPTION	Q'TY	REMARKS
1-1	71711-86R00-N49	BUMPER, FR UPPER (BLACK/PRIMARY)	1	PAINT TO MATCH, WITH OUT 71712-86R00
1-2	71710-86R00-A9R	BUMPER SET, FR (TURQUOISE/BLACK)	1	BODY COLOR:ZQN
1-3	71710-86R00-BZU	BUMPER SET, FR (SILVER/BLACK)	1	BODY COLOR:ZCC
1-4	71710-86R00-BZV	BUMPER SET, FR (GRAY/BLACK)	1	BODY COLOR:ZCD
1-5	71710-86R00-BZW	BUMPER SET, FR (BLACK)	1	BODY COLOR:ZCE
1-6	71710-86R00-BZY	BUMPER SET, FR (RED/BLACK)	1	BODY COLOR:ZCF
1-7	71710-86R00-EZZ	BUMPER SET, FR (WHITE/BLACK)	1	BODY COLOR:ZNL
1-8	71710-86R00-2KW	BUMPER SET, FR (WHITE/BLACK)	1	BODY COLOR:26U
2	71712-86R00	CAP, FR BUMPER	1	
3	71713-54P00	PAD, FR BUMPER	2	
4	71713-86R00-5PK	COVER, FR BUMPER CAP (BLACK)	1	
5	71714-86R00	PAD, FR BUMPER CTR	2	
6	71715-86R00	PAD, FR BUMPER SIDE	1	
7	71721-86R00-5PK	BUMPER, FR LOWER (BLACK)	1	
8	71731-54P00	HOLDER, FR BUMPER SIDE RH	1	
9	71732-54P00	HOLDER, FR BUMPER SIDE LH	1	
10	71733-54P00	HOLDER, FR BUMPER FR RH	1	
11	71734-54P00	HOLDER, FR BUMPER FR LH	1	
12	71751-86R20-5PK	GARNISH, DRL RH (BLACK)	1	
13	71752-86R20-5PK	GARNISH, DRL LH (BLACK)	1	
14	71771-86R10-0BK	GARNISH, FR BUMPER RH (GRAY)	1	
15	71772-86R10-0BK	GARNISH, FR BUMPER LH (GRAY)	1	

FIG.717B(3-G-14) FRONT BUMPER (N/AEB CAMERA:W/FRONT FOG LAMP)
FIG.717C(3-H-2) FRONT BUMPER
(W/AEB MONAURAL CAMERA:N/FRONT CLEARANCE SONAR:
N/BLIND SPOT WARNING)
FIG.717D(3-H-4) FRONT BUMPER
(W/AEB MONAURAL CAMERA:N/FRONT CLEARANCE SONAR:
W/BLIND SPOT WARNING)
FIG.717E(3-H-7) FRONT BUMPER
(W/AEB MONAURAL CAMERA:W/FRONT CLEARANCE SONAR)

FIG.717A

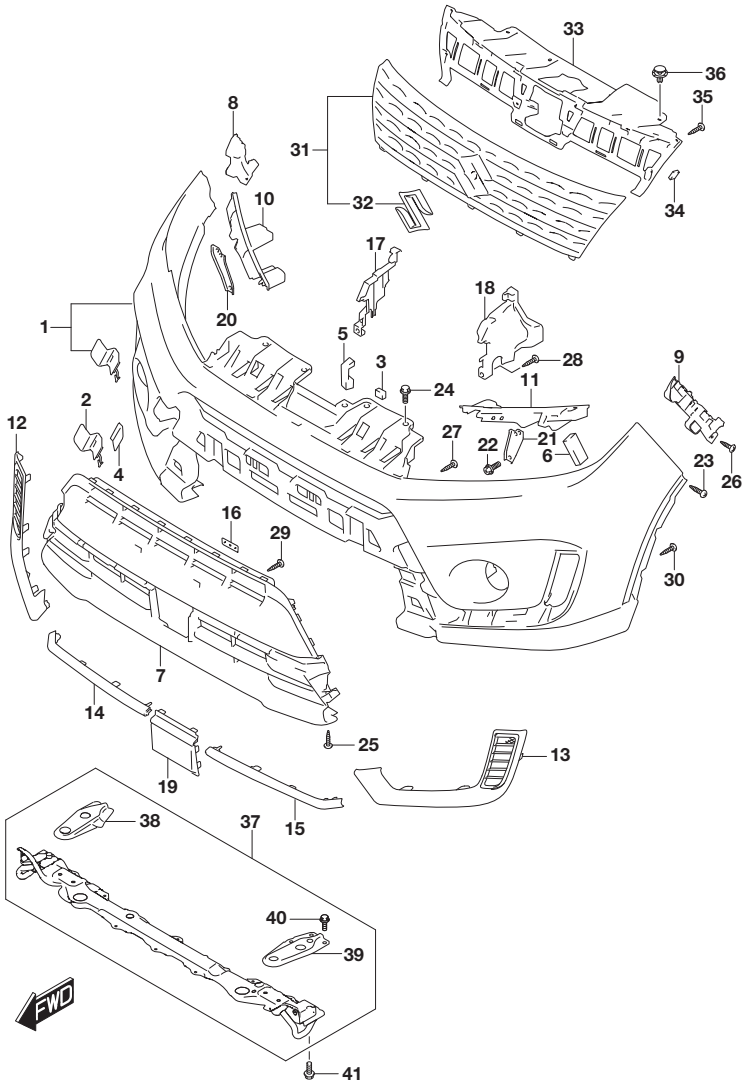

FIG.717A (3-G-13) FRONT BUMPER (N/AEB CAMERA:N/FRONT FOG LAMP)

REF NO.	PART NO.	DESCRIPTION	Q'TY	REMARKS
16	71773-54P01	RETAINER, FR LICENSE PLATE	2	
17	71781-86R00	COVER, FR END SIDE UPR RH	1	
18	71782-86R00	COVER, FR END SIDE UPR LH	1	
19	71790-86R30-H22	COVER, SENSOR (GRAY/BLACK)	1	
20	71791-54P00	BRACKET, LAMP LWR RH	1	
21	71792-54P00	BRACKET, LAMP LWR LH	1	
22	09122-76006	SCREW (6X16)	6	
23	09132-05053	SCREW (5X16)	2	
24	01551-0616C	BOLT	4	
25	03241-0516D	SCREW	4	
26	03541-0516A	SCREW	6	
27	03541-0516A	SCREW	5	
28	03541-0516A	SCREW	2	
29	03541-0516A	SCREW	4	
30	03541-0516A	SCREW	10	
31	72110-54P00-C48	GRILLE, RDTR (CHROME/BLACK)	1	
32	77811-65J00-0PG	.EMBLEM, MARK S (CHROME)	1	
33	72121-54P00	COVER, RDTR GRL	1	
34	72122-54P00	PAD, RDTR GRL COVER	4	
35	03541-0516A	SCREW	8	
36	09409-07340	CLIP (6.8X11.5)	4	
37	71100-64R02	MEMBER, RDTR SPRT	1	
38	71131-64R00	.BRACKET, RDTR RH	1	
39	71132-64R00	.BRACKET, RDTR LH	1	
40	01550-0816A	.BOLT	6	
41	01551-1025C	BOLT	6	

APK414-3 P22 717A
FRONT BUMPER (1)

FIG.717B

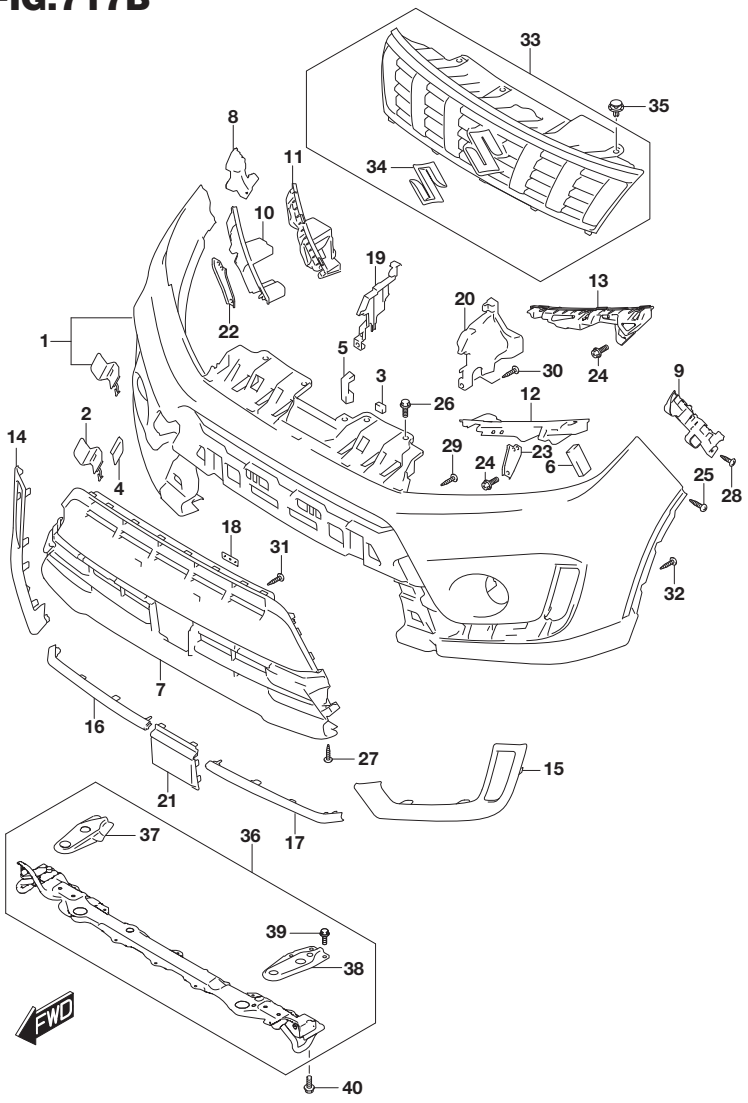

FIG.717B (3-G-14) FRONT BUMPER (N/AEB CAMERA:W/FRONT FOG LAMP)

REF NO.	PART NO.	DESCRIPTION	Q'TY	REMARKS
1-1	71711-86R00-N49	BUMPER, FR UPPER (BLACK/PRIMARY)	1	TYPE 3,TYPE 4 PAINT TO MATCH, WITH OUT 71712-86R00
1-2	71710-86R00-A9R	BUMPER SET, FR (TURQUOISE/BLACK)	1	TYPE 3 BODY COLOR:A6H,A9L,ZQN
1-3	71710-86R00-A9T	BUMPER SET, FR (IVORY/BLACK)	1	TYPE 3 BODY COLOR:A9N
1-4	71710-86R00-BZU	BUMPER SET, FR (SILVER/BLACK)	1	TYPE 3 BODY COLOR:ZCC
1-5	71710-86R00-BZV	BUMPER SET, FR (GRAY/BLACK)	1	TYPE 3 BODY COLOR:A9G,ZCD
1-6	71710-86R00-BZW	BUMPER SET, FR (BLACK)	1	TYPE 3 BODY COLOR:ZCE
1-7	71710-86R00-BZY	BUMPER SET, FR (RED/BLACK)	1	TYPE 3 BODY COLOR:A9H,ZCF
1-8	71710-86R00-DBJ	BUMPER SET, FR (YELLOW/BLACK)	1	TYPE 3 BODY COLOR:DBG,DBH
1-9	71710-86R00-DBK	BUMPER SET, FR (BLUE/BLACK)	1	TYPE 3 BODY COLOR:DBF
1-10	71710-86R00-EZZ	BUMPER SET, FR (WHITE/BLACK)	1	TYPE 3 BODY COLOR:ZNL
1-11	71710-86R00-2KW	BUMPER SET, FR (WHITE/BLACK)	1	TYPE 3 BODY COLOR:26U
2	71712-86R00	CAP, FR BUMPER	1	
3	71713-54P00	PAD, FR BUMPER	2	
4	71713-86R00-5PK	COVER, FR BUMPER CAP (BLACK)	1	
5	71714-86R00	PAD, FR BUMPER CTR	2	
6	71715-86R00	PAD, FR BUMPER SIDE	1	
7	71721-86R00-5PK	BUMPER, FR LOWER (BLACK)	1	
8	71731-54P00	HOLDER, FR BUMPER SIDE RH	1	
9	71732-54P00	HOLDER, FR BUMPER SIDE LH	1	
10	71733-54P00	HOLDER, FR BUMPER FR RH	1	N/EASS
11	71733-53S00	HOLDER, FR BUMPER FR RH	1	W/EASS
12	71734-54P00	HOLDER, FR BUMPER FR LH	1	N/EASS
13	71734-53S00	HOLDER, FR BUMPER FR LH	1	W/EASS
14	71751-86R00-0PG	GARNISH, DRL RH (CHROME)	1	

APK414-3 P22 717B
FRONT BUMPER (2)

FIG.717B

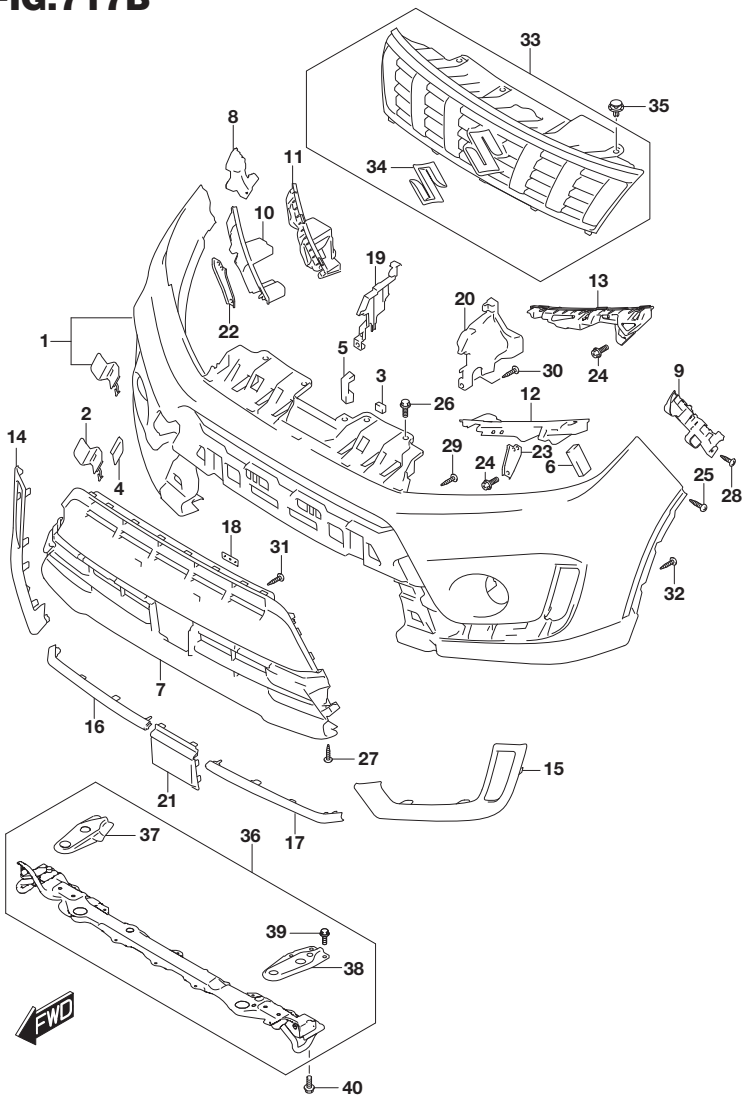

FIG.717B (3-G-15) FRONT BUMPER (N/AEB CAMERA:W/FRONT FOG LAMP)

REF NO.	PART NO.	DESCRIPTION	Q'TY	REMARKS
15	71752-86R00-0PG	GARNISH, DRL LH (CHROME)	1	
16	71771-86R00-0PG	GARNISH, FR BUMPER RH (CHROME)	1	
17	71772-86R00-0PG	GARNISH, FR BUMPER LH (CHROME)	1	
18	71773-54P01	RETAINER, FR LICENSE PLATE	2	
19	71781-86R00	COVER, FR END SIDE UPR RH	1	N/EASS
20	71782-86R00	COVER, FR END SIDE UPR LH	1	N/EASS
21	71790-86R10-C48	COVER, SENSOR (CHROME/BLACK)	1	
22	71791-54P00	BRACKET, LAMP LWR RH	1	N/EASS
23	71792-54P00	BRACKET, LAMP LWR LH	1	N/EASS
24	09122-76006	SCREW (6X16)	6	
25	09132-05053	SCREW (5X16)	2	
26	01551-0616C	BOLT	4	
27	03241-0516D	SCREW	4	
28-1	03541-0516A	SCREW	6	N/EASS
28-2	03541-0512A	SCREW	6	W/EASS
29	03541-0516A	SCREW	5	
30	03541-0516A	SCREW	2	N/EASS
31	03541-0516A	SCREW	4	
32	03541-0516A	SCREW	10	
33	72110-86R00-DHW	GRILLE, RADIATOR (BLACK/CHROME)	1	
34	77811-65J00-0PG	.EMBLEM, MARK S (CHROME)	1	
35	09409-07340	CLIP (6.8X11.5)	4	
36-1	71100-64R02	MEMBER, RDTR SPRT	1	K10C
36-2	71100-55P01	MEMBER, RDTR SPRT	1	K14C,K14D
37-1	71131-64R00	.BRACKET, RDTR RH	1	K10C
37-2	71131-55P00	.BRACKET, RDTR RH	1	K14C,K14D
38-1	71132-64R00	.BRACKET, RDTR LH	1	K10C
38-2	71132-55P00	.BRACKET, RDTR LH	1	K14C,K14D
39	01550-0816A	.BOLT	6	
40	01551-1025C	BOLT	6	

APK414-3 P22 717B
FRONT BUMPER (2)

FIG.717C

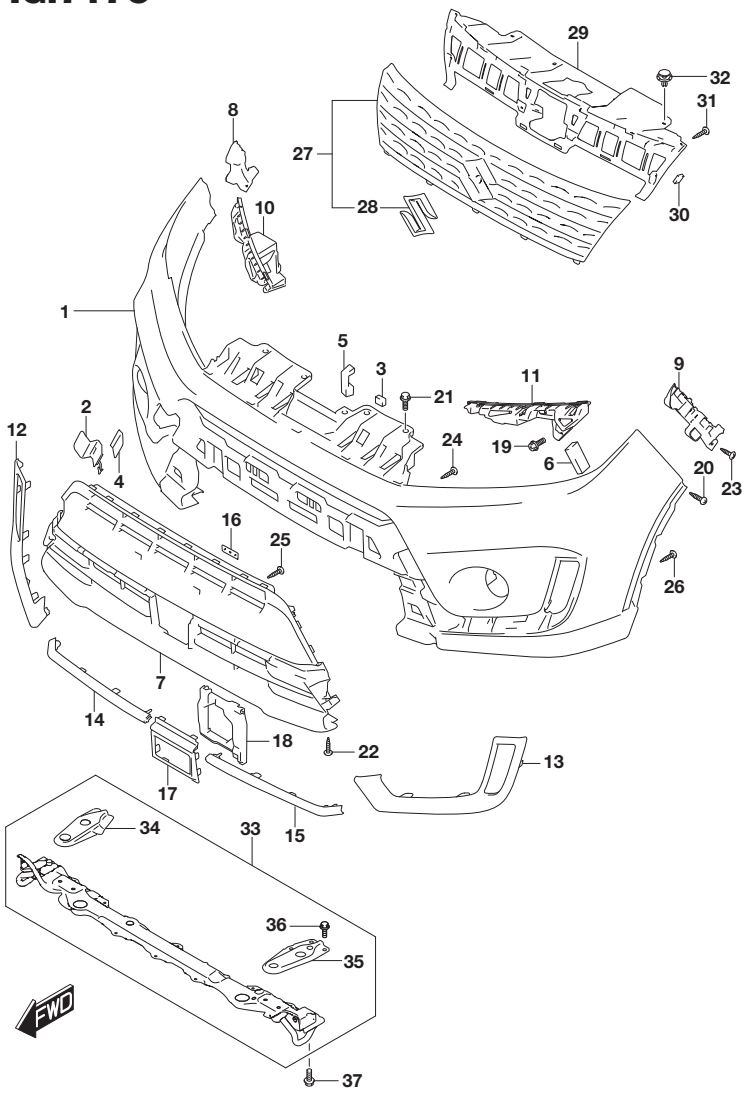

FIG.717C (3-H-2) FRONT BUMPER (SEE NOTE)

REF NO.	PART NO.	DESCRIPTION	Q'TY	REMARKS
1	71711-86R00-N49	BUMPER, FR UPPER (BLACK/PRIMARY)	1	PAINT TO MATCH
2	71712-86R00	CAP, FR BUMPER	1	
3	71713-54P00	PAD, FR BUMPER	2	
4	71713-86R00-5PK	COVER, FR BUMPER CAP (BLACK)	1	
5	71714-86R00	PAD, FR BUMPER CTR	2	
6	71715-86R00	PAD, FR BUMPER SIDE	1	
7	71721-86R00-5PK	BUMPER, FR LOWER (BLACK)	1	
8	71731-54P00	HOLDER, FR BUMPER SIDE RH	1	
9	71732-54P00	HOLDER, FR BUMPER SIDE LH	1	
10	71733-53S00	HOLDER, FR BUMPER FR RH	1	
11	71734-53S00	HOLDER, FR BUMPER FR LH	1	
12	71751-86R00-0PG	GARNISH, DRL RH (CHROME)	1	
13	71752-86R00-0PG	GARNISH, DRL LH (CHROME)	1	
14	71771-86R00-0PG	GARNISH, FR BUMPER RH (CHROME)	1	
15	71772-86R00-0PG	GARNISH, FR BUMPER LH (CHROME)	1	
16	71773-54P01	RETAINER, FR LICENSE PLATE	2	
17	71790-86R00-C48	COVER, SENSOR (CHROME/BLACK)	1	
18	72532-86R00	COVER, SENSOR LWR BRKT	1	
19	09122-76006	SCREW (6X16)	6	
20	09132-05053	SCREW (5X16)	2	
21	01551-0616C	BOLT	4	
22	03241-0516D	SCREW	4	
23	03541-0512A	SCREW	6	
24	03541-0516A	SCREW	5	
25	03541-0516A	SCREW	4	
26	03541-0516A	SCREW	10	
27	72110-54P00-C48	GRILLE, RDTR (CHROME/BLACK)	1	
28	77811-65J00-0PG	.EMBLEM, MARK S (CHROME)	1	
29	72121-54P00	COVER, RDTR GRL	1	
30	72122-54P00	PAD, RDTR GRL COVER	4	

NOTE : W/AEB MONAURAL CAMERA:N/FRONT CLEARANCE SONAR:
N/BLIND SPOT WARNING

FIG.717C

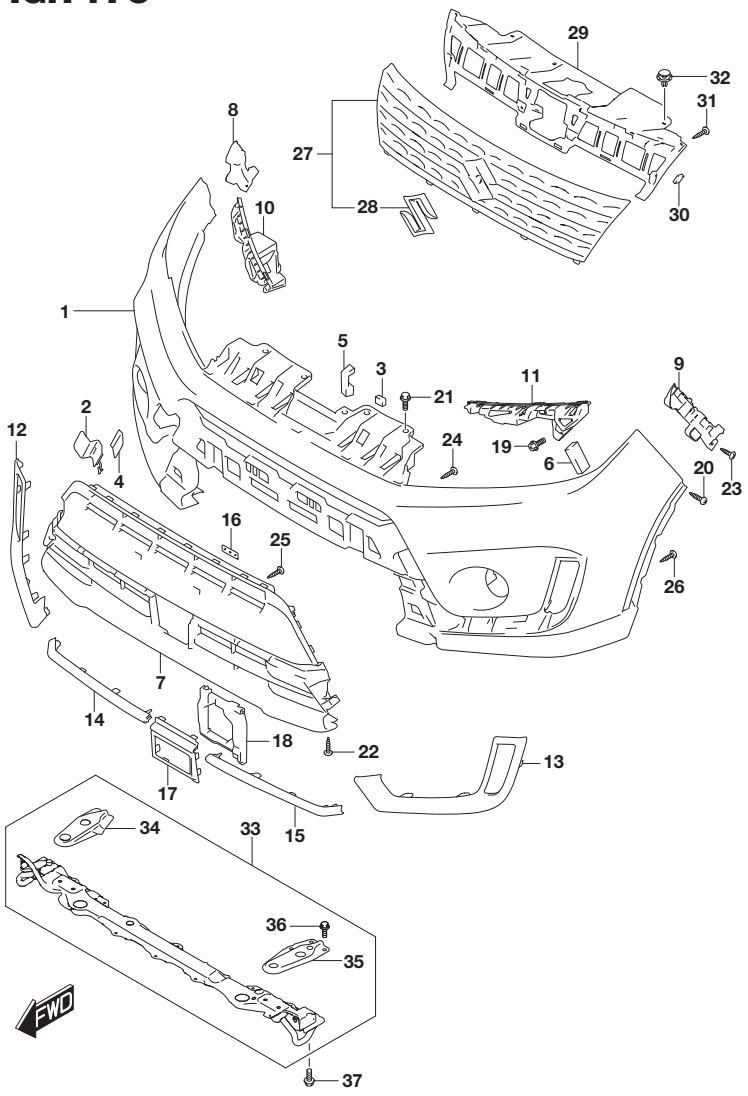

FIG.717C (3-H-3) FRONT BUMPER (SEE NOTE)

REF NO.	PART NO.	DESCRIPTION	Q'TY	REMARKS
31	03541-0516A	SCREW	8	
32	09409-07340	CLIP (6.8X11.5)	4	
33	71100-55P01	MEMBER, RDTR SPRT	1	
34	71131-55P00	.BRACKET, RDTR RH	1	
35	71132-55P00	.BRACKET, RDTR LH	1	
36	01550-0816A	.BOLT	6	
37	01551-1025C	BOLT	6	

NOTE : W/AEB MONAURAL CAMERA:N/FRONT CLEARANCE SONAR:
N/BLIND SPOT WARNING

FIG.717D

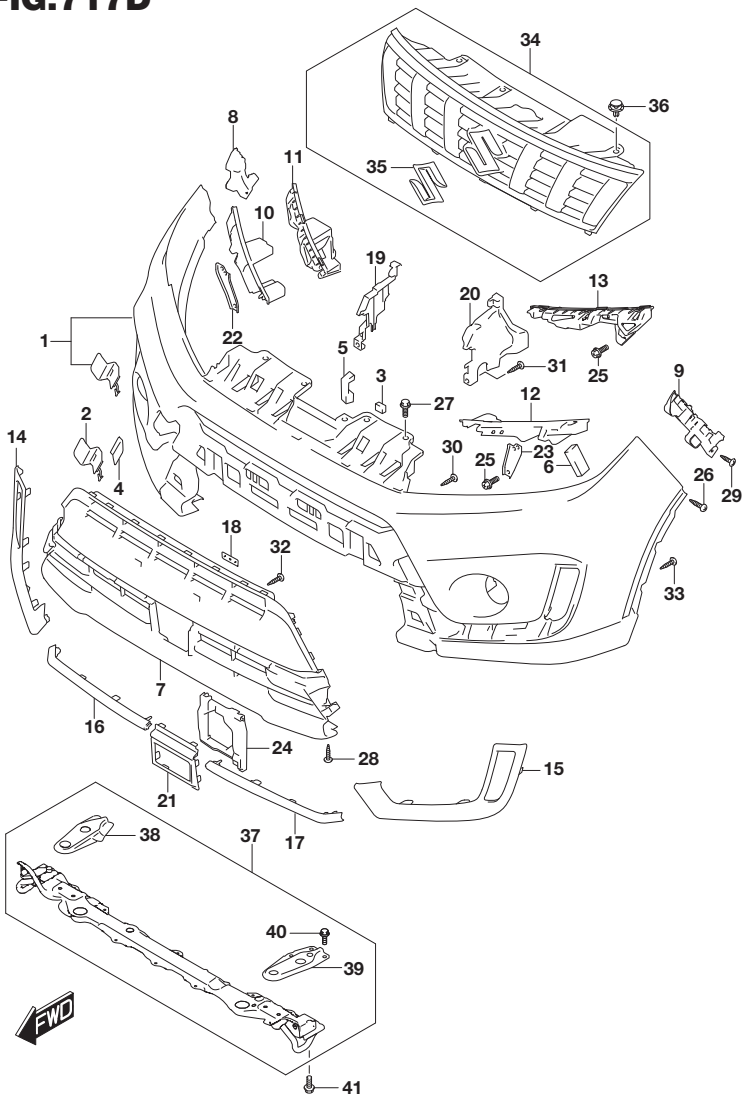

FIG.717D (3-H-4) FRONT BUMPER (SEE NOTE)

REF NO.	PART NO.	DESCRIPTION	Q'TY	REMARKS
1-1	71711-86R00-N49	BUMPER, FR UPPER (BLACK/PRIMARY)	1	TYPE 3,TYPE 4 PAINT TO MATCH, WITH OUT 71712-86R00
1-2	71710-86R00-A9R	BUMPER SET, FR (TURQUOISE/BLACK)	1	TYPE 3 BODY COLOR:A6H,A9L,ZQN
1-3	71710-86R00-A9T	BUMPER SET, FR (IVORY/BLACK)	1	TYPE 3 BODY COLOR:A9N
1-4	71710-86R00-BZU	BUMPER SET, FR (SILVER/BLACK)	1	TYPE 3 BODY COLOR:ZCC
1-5	71710-86R00-BZV	BUMPER SET, FR (GRAY/BLACK)	1	TYPE 3 BODY COLOR:A9G,ZCD
1-6	71710-86R00-BZW	BUMPER SET, FR (BLACK)	1	TYPE 3 BODY COLOR:ZCE
1-7	71710-86R00-BZY	BUMPER SET, FR (RED/BLACK)	1	TYPE 3 BODY COLOR:A9H,ZCF
1-8	71710-86R00-DBJ	BUMPER SET, FR (YELLOW/BLACK)	1	TYPE 3 BODY COLOR:DBG,DBH
1-9	71710-86R00-DBK	BUMPER SET, FR (BLUE/BLACK)	1	TYPE 3 BODY COLOR:DBF
1-10	71710-86R00-EZZ	BUMPER SET, FR (WHITE/BLACK)	1	TYPE 3 BODY COLOR:ZNL
1-11	71710-86R00-2KW	BUMPER SET, FR (WHITE/BLACK)	1	TYPE 3 BODY COLOR:26U
2	71712-86R00	CAP, FR BUMPER	1	
3	71713-54P00	PAD, FR BUMPER	2	
4	71713-86R00-5PK	COVER, FR BUMPER CAP (BLACK)	1	
5	71714-86R00	PAD, FR BUMPER CTR	2	
6	71715-86R00	PAD, FR BUMPER SIDE	1	
7	71721-86R00-5PK	BUMPER, FR LOWER (BLACK)	1	
8	71731-54P00	HOLDER, FR BUMPER SIDE RH	1	
9	71732-54P00	HOLDER, FR BUMPER SIDE LH	1	

NOTE : W/AEB MONAURAL CAMERA:N/FRONT CLEARANCE SONAR:
W/BLIND SPOT WARNING

APK414-3 P22 717D
FRONT BUMPER (4)

FIG.717D

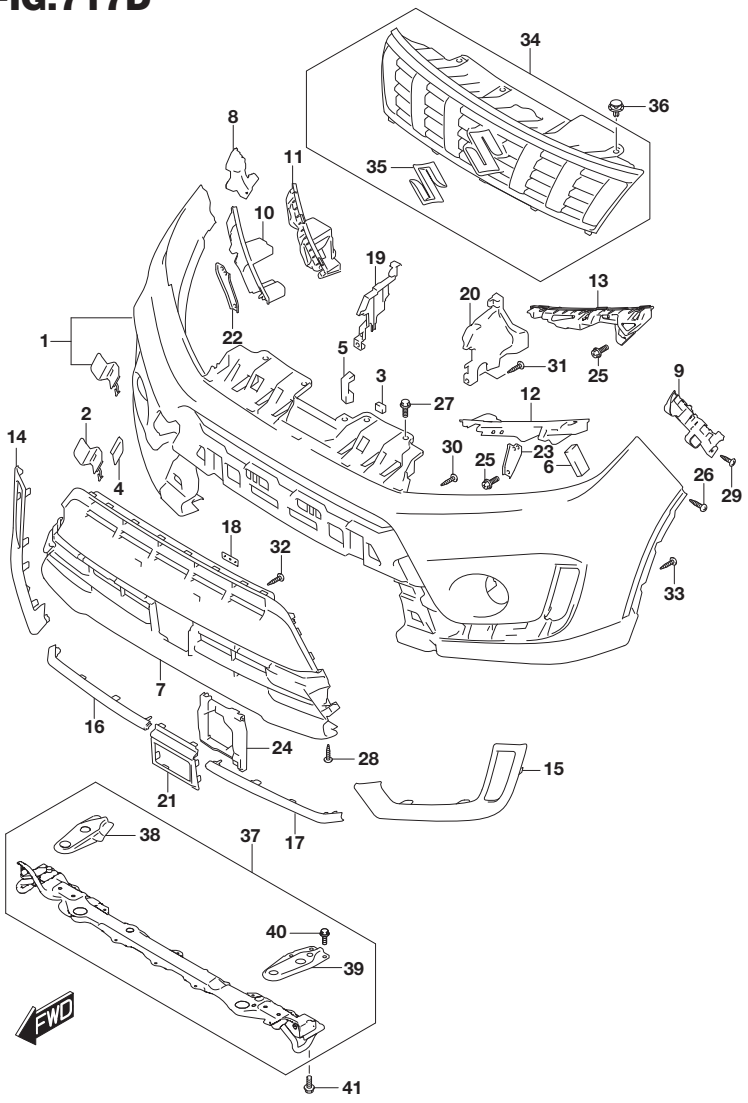

FIG.717D (3-H-5) FRONT BUMPER (SEE NOTE)

REF NO.	PART NO.	DESCRIPTION	Q'TY	REMARKS
10	71733-54P00	HOLDER, FR BUMPER FR RH	1	N/EASS
11	71733-53S00	HOLDER, FR BUMPER FR RH	1	W/EASS
12	71734-54P00	HOLDER, FR BUMPER FR LH	1	N/EASS
13	71734-53S00	HOLDER, FR BUMPER FR LH	1	W/EASS
14	71751-86R00-0PG	GARNISH, DRL RH (CHROME)	1	
15	71752-86R00-0PG	GARNISH, DRL LH (CHROME)	1	
16	71771-86R00-0PG	GARNISH, FR BUMPER RH (CHROME)	1	
17	71772-86R00-0PG	GARNISH, FR BUMPER LH (CHROME)	1	
18	71773-54P01	RETAINER, FR LICENSE PLATE	2	
19	71781-86R00	COVER, FR END SIDE UPR RH	1	N/EASS
20	71782-86R00	COVER, FR END SIDE UPR LH	1	N/EASS
21	71790-86R00-C48	COVER, SENSOR (CHROME/BLACK)	1	
22	71791-54P00	BRACKET, LAMP LWR RH	1	N/EASS
23	71792-54P00	BRACKET, LAMP LWR LH	1	N/EASS
24	72532-86R00	COVER, SENSOR LWR BRKT	1	
25	09122-76006	SCREW (6X16)	6	
26	09132-05053	SCREW (5X16)	2	
27	01551-0616C	BOLT	4	
28	03241-0516D	SCREW	4	
29-1	03541-0516A	SCREW	6	N/EASS
29-2	03541-0512A	SCREW	6	W/EASS
30	03541-0516A	SCREW	5	
31	03541-0516A	SCREW	2	N/EASS
32	03541-0516A	SCREW	4	
33	03541-0516A	SCREW	10	
34	72110-86R00-DHW	GRILLE, RADIATOR (BLACK/CHROME)	1	
35	77811-65J00-0PG	.EMBLEM, MARK S (CHROME)	1	
36	09409-07340	CLIP (6.8X11.5)	4	
37-1	71100-64R02	MEMBER, RDTR SPRT	1	K10C
37-2	71100-55P01	MEMBER, RDTR SPRT	1	K14C,K14D

NOTE : W/AEB MONAURAL CAMERA:N/FRONT CLEARANCE SONAR:
W/BLIND SPOT WARNING

FIG.717D

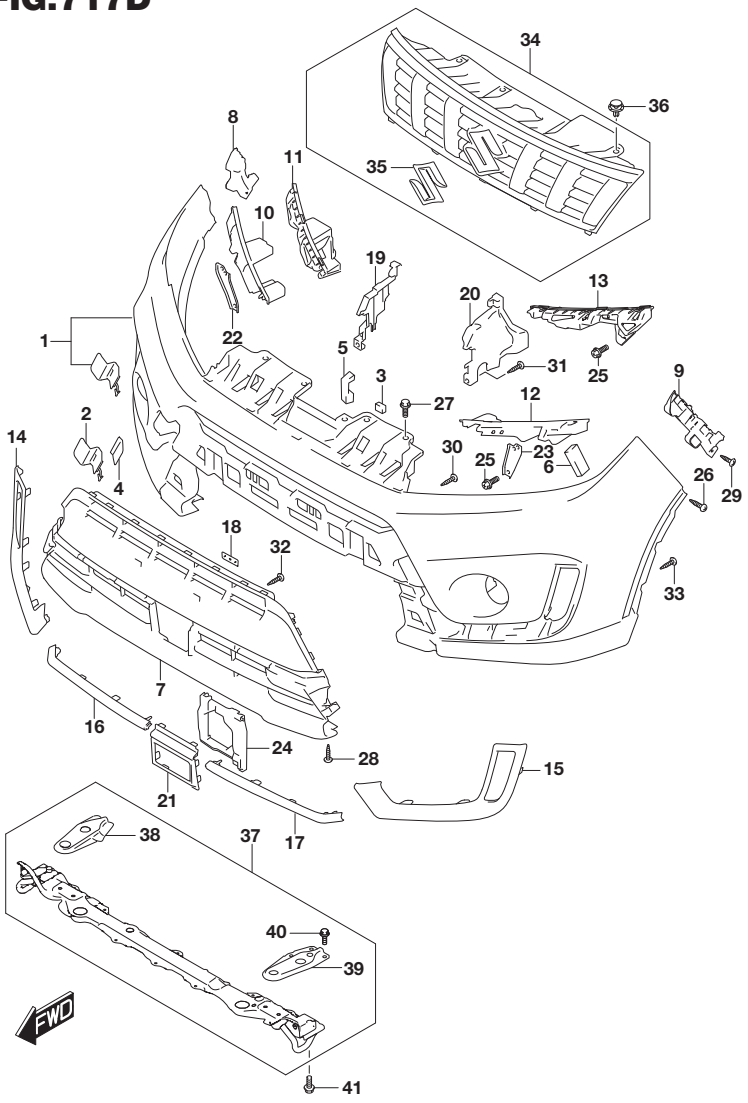

FIG.717D (3-H-6) FRONT BUMPER (SEE NOTE)

REF NO.	PART NO.	DESCRIPTION	Q'TY	REMARKS
38-1	71131-64R00	.BRACKET, RDTR RH	1	K10C
38-2	71131-55P00	.BRACKET, RDTR RH	1	K14C,K14D
39-1	71132-64R00	.BRACKET, RDTR LH	1	K10C
39-2	71132-55P00	.BRACKET, RDTR LH	1	K14C,K14D
40	01550-0816A	.BOLT	6	
41	01551-1025C	BOLT	6	

NOTE : W/AEB MONAURAL CAMERA:N/FRONT CLEARANCE SONAR:
W/BLIND SPOT WARNING

APK414-3 P22 717D
FRONT BUMPER (4)

FIG.717E

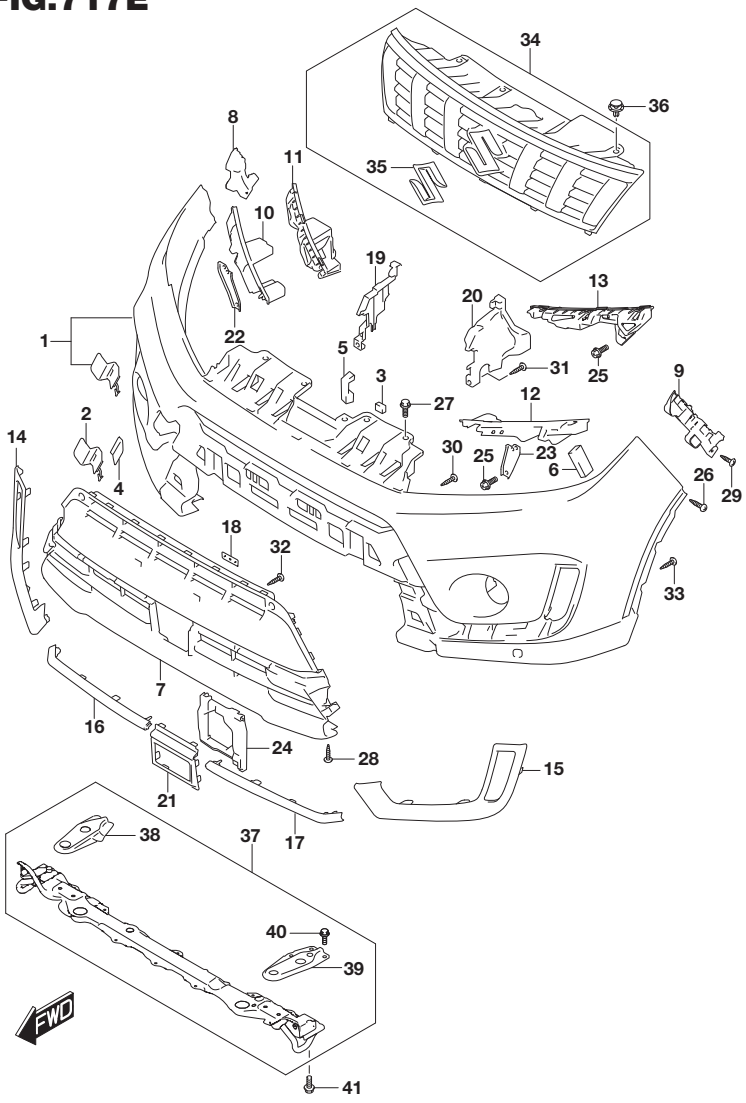

FIG.717E (3-H-7) FRONT BUMPER (SEE NOTE)

REF NO.	PART NO.	DESCRIPTION	Q'TY	REMARKS
1-1	71711-86R10-N49	BUMPER, FR UPPER (BLACK/PRIMARY)	1	TYPE 3,TYPE 4 PAINT TO MATCH, WITH OUT 71712-86R00
1-2	71710-86R10-A9R	BUMPER SET, FR (TURQUOISE/BLACK)	1	TYPE 3 BODY COLOR:A6H,A9L,ZQN
1-3	71710-86R10-A9T	BUMPER SET, FR (IVORY/BLACK)	1	TYPE 3 BODY COLOR:A9N
1-4	71710-86R10-BZU	BUMPER SET, FR (SILVER/BLACK)	1	TYPE 3 BODY COLOR:ZCC
1-5	71710-86R10-BZV	BUMPER SET, FR (GRAY/BLACK)	1	TYPE 3 BODY COLOR:A9G,ZCD
1-6	71710-86R10-BZW	BUMPER SET, FR (BLACK)	1	TYPE 3 BODY COLOR:ZCE
1-7	71710-86R10-BZY	BUMPER SET, FR (RED/BLACK)	1	TYPE 3 BODY COLOR:A9H,ZCF
1-8	71710-86R10-DBJ	BUMPER SET, FR (YELLOW/BLACK)	1	TYPE 3 BODY COLOR:DBG,DBH
1-9	71710-86R10-DBK	BUMPER SET, FR (BLUE/BLACK)	1	TYPE 3 BODY COLOR:DBF
1-10	71710-86R10-EZZ	BUMPER SET, FR (WHITE/BLACK)	1	TYPE 3 BODY COLOR:ZNL
1-11	71710-86R10-2KW	BUMPER SET, FR (WHITE/BLACK)	1	TYPE 3 BODY COLOR:26U
2	71712-86R00	CAP, FR BUMPER	1	
3	71713-54P00	PAD, FR BUMPER	2	
4	71713-86R00-5PK	COVER, FR BUMPER CAP (BLACK)	1	
5	71714-86R00	PAD, FR BUMPER CTR	2	
6	71715-86R00	PAD, FR BUMPER SIDE	1	
7	71721-86R10-5PK	BUMPER, FR LOWER (BLACK)	1	
8	71731-54P00	HOLDER, FR BUMPER SIDE RH	1	
9	71732-54P00	HOLDER, FR BUMPER SIDE LH	1	
10	71733-54P00	HOLDER, FR BUMPER FR RH	1	N/EASS

NOTE : W/AEB MONAURAL CAMERA:W/FRONT CLEARANCE SONAR

FIG.717E

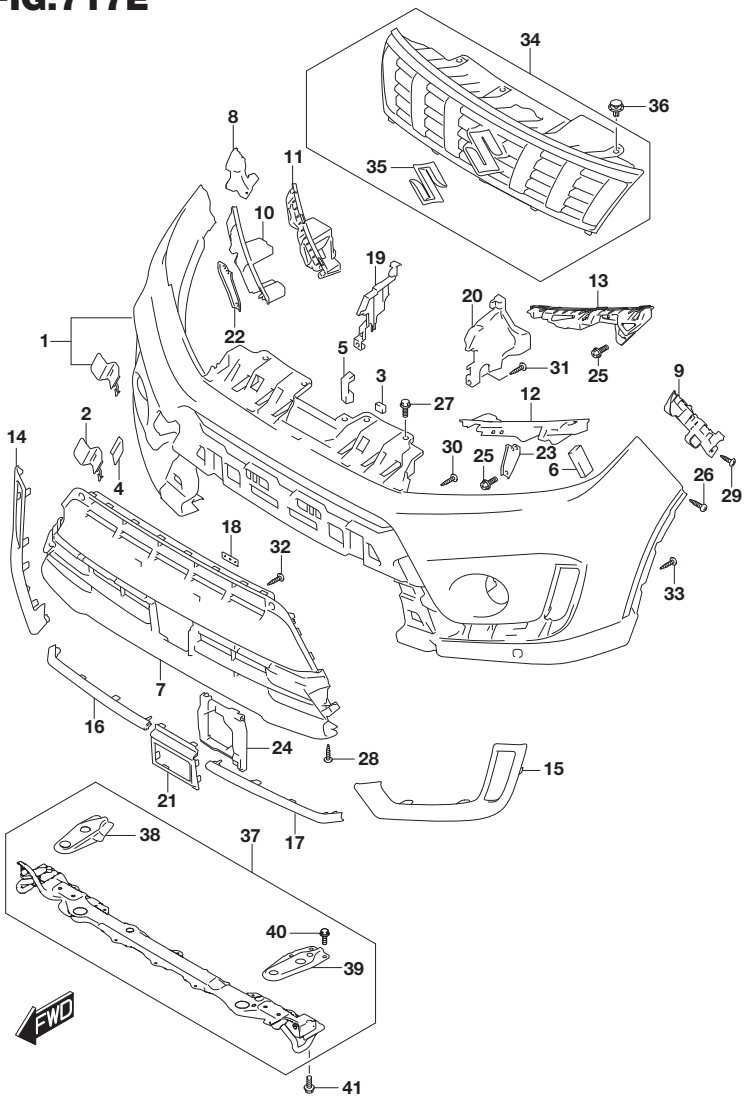

FIG.717E (3-H-8) FRONT BUMPER (SEE NOTE)

REF NO.	PART NO.	DESCRIPTION	Q'TY	REMARKS
11	71733-53S00	HOLDER, FR BUMPER FR RH	1	W/EASS
12	71734-54P00	HOLDER, FR BUMPER FR LH	1	N/EASS
13	71734-53S00	HOLDER, FR BUMPER FR LH	1	W/EASS
14	71751-86R00-0PG	GARNISH, DRL RH (CHROME)	1	
15	71752-86R00-0PG	GARNISH, DRL LH (CHROME)	1	
16	71771-86R00-0PG	GARNISH, FR BUMPER RH (CHROME)	1	
17	71772-86R00-0PG	GARNISH, FR BUMPER LH (CHROME)	1	
18	71773-54P01	RETAINER, FR LICENSE PLATE	2	
19	71781-86R00	COVER, FR END SIDE UPR RH	1	N/EASS
20	71782-86R00	COVER, FR END SIDE UPR LH	1	N/EASS
21	71790-86R00-C48	COVER, SENSOR (CHROME/BLACK)	1	
22	71791-54P00	BRACKET, LAMP LWR RH	1	N/EASS
23	71792-54P00	BRACKET, LAMP LWR LH	1	N/EASS
24	72532-86R00	COVER, SENSOR LWR BRKT	1	
25	09122-76006	SCREW (6X16)	6	
26	09132-05053	SCREW (5X16)	2	
27	01551-0616C	BOLT	4	
28	03241-0516D	SCREW	4	
29-1	03541-0516A	SCREW	6	N/EASS
29-2	03541-0512A	SCREW	6	W/EASS
30	03541-0516A	SCREW	5	
31	03541-0516A	SCREW	2	N/EASS
32	03541-0516A	SCREW	4	
33	03541-0516A	SCREW	10	
34	72110-86R00-DHW	GRILLE, RADIATOR (BLACK/CHROME)	1	
35	77811-65J00-0PG	.EMBLEM, MARK S (CHROME)	1	
36	09409-07340	CLIP (6.8X11.5)	4	
37-1	71100-64R02	MEMBER, RDTR SPRT	1	K10C
37-2	71100-55P01	MEMBER, RDTR SPRT	1	K14C,K14D
38-1	71131-64R00	.BRACKET, RDTR RH	1	K10C
38-2	71131-55P00	.BRACKET, RDTR RH	1	K14C,K14D

NOTE : W/AEB MONAURAL CAMERA:W/FRONT CLEARANCE SONAR

FIG.717E

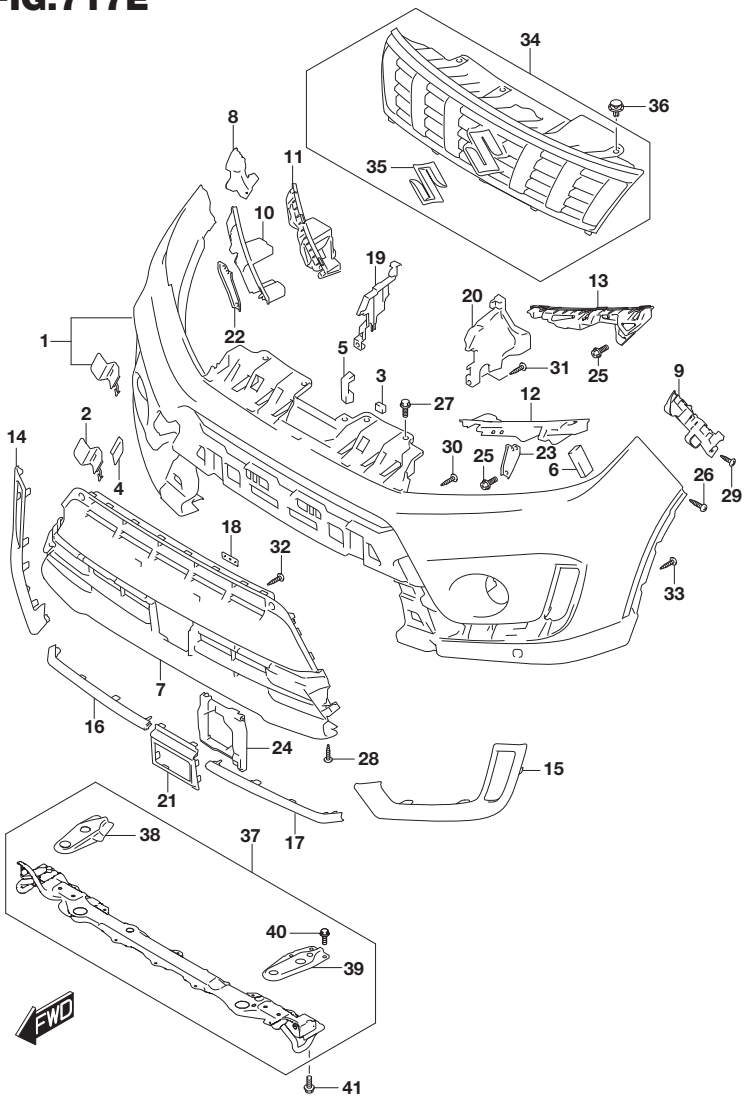

FIG.717E (3-H-9) FRONT BUMPER (SEE NOTE)

REF NO.	PART NO.	DESCRIPTION	Q'TY	REMARKS
39-1	71132-64R00	.BRACKET, RDTR LH	1	K10C
39-2	71132-55P00	.BRACKET, RDTR LH	1	K14C,K14D
40	01550-0816A	.BOLT	6	
41	01551-1025C	BOLT	6	

NOTE : W/AEB MONAURAL CAMERA:W/FRONT CLEARANCE SONAR

FIG.718A

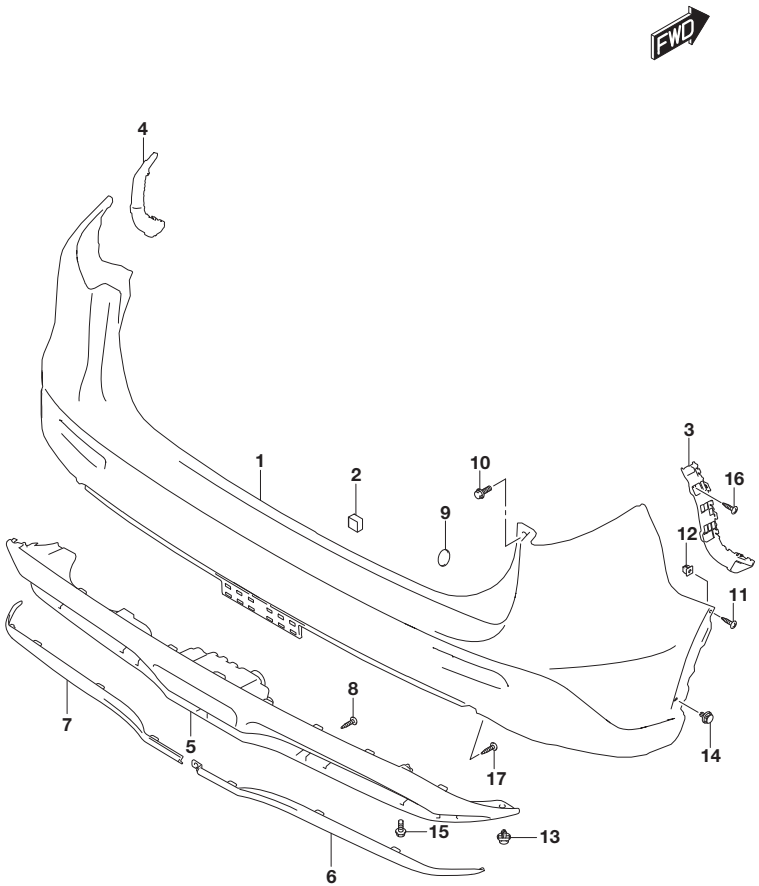

FIG.718A (3-H-10) REAR BUMPER (N/REAR CLEARANCE SONAR)

REF NO.	PART NO.	DESCRIPTION	Q'TY	REMARKS
1-1	71811-54P01-N49	BUMPER, RR (BLACK/PRIMARY)	1	TYPE 3,TYPE 4 PAINT TO MATCH
1-2	71811-54P01-A9R	BUMPER, RR (TURQUOISE/BLACK)	1	TYPE 3 BODY COLOR:A6H,A9L,ZQN
1-3	71811-54P01-A9T	BUMPER, RR (IVORY/BLACK)	1	TYPE 3 BODY COLOR:A9N
1-4	71811-54P01-BZU	BUMPER, RR (SILVER/BLACK)	1	TYPE 3 BODY COLOR:ZCC
1-5	71811-54P01-BZV	BUMPER, RR (GRAY/BLACK)	1	TYPE 3 BODY COLOR:A9G,ZCD
1-6	71811-54P01-BZW	BUMPER, RR (BLACK)	1	TYPE 3 BODY COLOR:ZCE
1-7	71811-54P01-BZY	BUMPER, RR (RED/BLACK)	1	TYPE 3 BODY COLOR:A9H,ZCF
1-8	71811-54P01-DBJ	BUMPER, RR (YELLOW/BLACK)	1	TYPE 3 BODY COLOR:DBG,DBH
1-9	71811-54P01-DBK	BUMPER, RR (BLUE/BLACK)	1	TYPE 3 BODY COLOR:DBF
1-10	71811-54P01-EZZ	BUMPER, RR (WHITE/BLACK)	1	TYPE 3 BODY COLOR:ZNL
1-11	71811-54P01-2KW	BUMPER, RR (WHITE/BLACK)	1	TYPE 3 BODY COLOR:26U
2	71812-54P00	PAD, RR BUMPER	3	
3	71831-54P00	HOLDER, RR BUMPER SIDE RH	1	
4	71832-54P00	HOLDER, RR BUMPER SIDE LH	1	
5	71871-86R00-0BK	GUARD, REAR BUMPER (GRAY)	1	
6	71873-86R10-0BK	GARNISH, RR BUMPER GUARD SIDE RH (GRAY)	1	
7	71874-86R10-0BK	GARNISH, RR BUMPER GUARD SIDE LH (GRAY)	1	
8	03541-0512A	SCREW	5	
9	77191-76F00	FILM	2	
10	09128-06090	SCREW (6X16)	2	
11	09132-05053	SCREW (5X16)	2	
12	09148-05044	NUT	2	
13	09409-07340	CLIP (6.8X11.5)	2	

FIG.718A

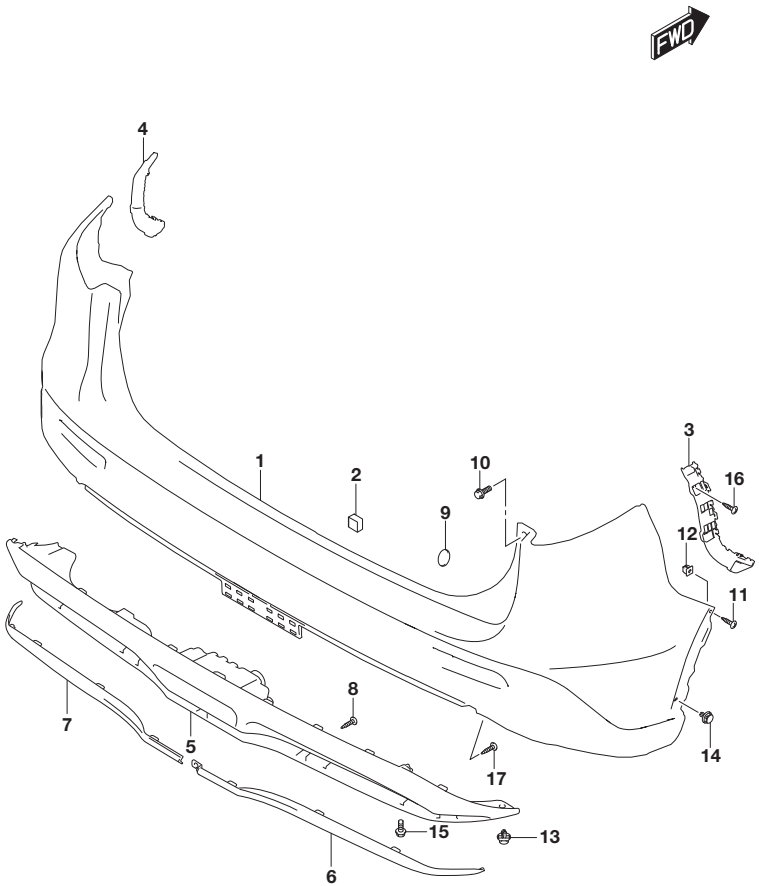

FIG.718A (3-H-11) REAR BUMPER (N/REAR CLEARANCE SONAR)

REF NO.	PART NO.	DESCRIPTION	Q'TY	REMARKS
14	09409-08327	CLIP (7.8X20)	2	
15	01551-0616C	BOLT	2	
16	03541-0516A	SCREW	6	
17	03541-0516A	SCREW	2	

FIG.718B

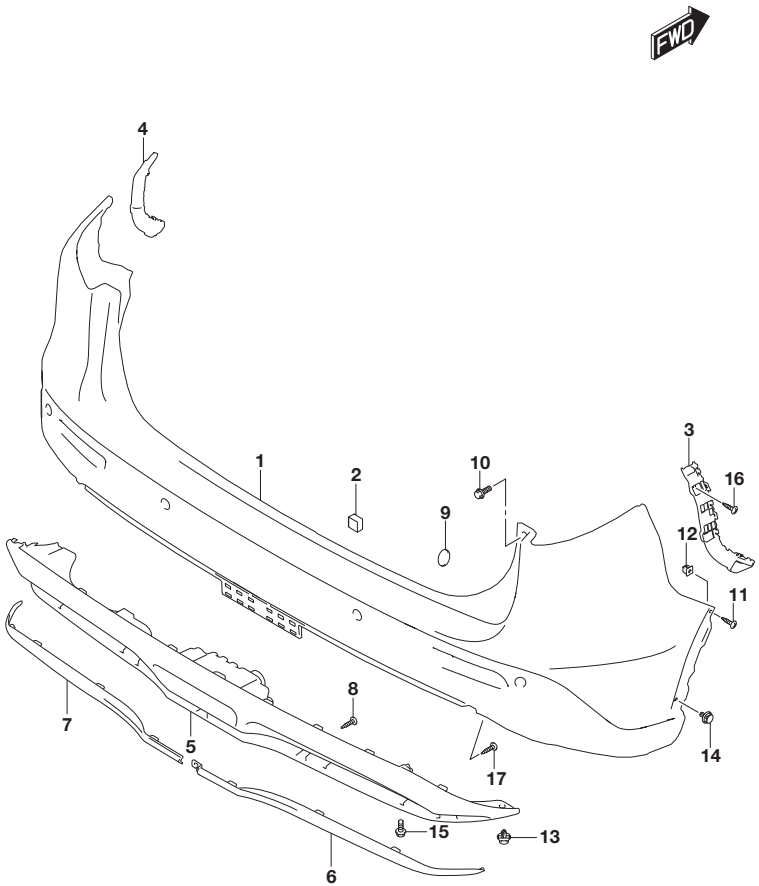

FIG.718B (3-H-12) REAR BUMPER (W/REAR CLEARANCE SONAR)

REF NO.	PART NO.	DESCRIPTION	Q'TY	REMARKS
1-1	71811-54P11-N49	BUMPER, RR (BLACK/PRIMARY)	1	TYPE 3,TYPE 4 PAINT TO MATCH
1-2	71811-54P11-A9R	BUMPER, RR (TURQUOISE/BLACK)	1	TYPE 3 BODY COLOR:A6H,A9L,ZQN
1-3	71811-54P11-A9T	BUMPER, RR (IVORY/BLACK)	1	TYPE 3 BODY COLOR:A9N
1-4	71811-54P11-BZU	BUMPER, RR (SILVER/BLACK)	1	TYPE 3 BODY COLOR:ZCC
1-5	71811-54P11-BZV	BUMPER, RR (GRAY/BLACK)	1	TYPE 3 BODY COLOR:A9G,ZCD
1-6	71811-54P11-BZW	BUMPER, RR (BLACK)	1	TYPE 3 BODY COLOR:ZCE
1-7	71811-54P11-BZY	BUMPER, RR (RED/BLACK)	1	TYPE 3 BODY COLOR:A9H,ZCF
1-8	71811-54P11-DBJ	BUMPER, RR (YELLOW/BLACK)	1	TYPE 3 BODY COLOR:DBG,DBH
1-9	71811-54P11-DBK	BUMPER, RR (BLUE/BLACK)	1	TYPE 3 BODY COLOR:DBF
1-10	71811-54P11-EZZ	BUMPER, RR (WHITE/BLACK)	1	TYPE 3 BODY COLOR:ZNL
1-11	71811-54P11-2KW	BUMPER, RR (WHITE/BLACK)	1	TYPE 3 BODY COLOR:26U
2	71812-54P00	PAD, RR BUMPER	3	
3	71831-54P00	HOLDER, RR BUMPER SIDE RH	1	
4	71832-54P00	HOLDER, RR BUMPER SIDE LH	1	
5	71871-86R00-0BK	GUARD, REAR BUMPER (GRAY)	1	
6	71873-86R10-0BK	GARNISH, RR BUMPER GUARD SIDE RH (GRAY)	1	
7	71874-86R10-0BK	GARNISH, RR BUMPER GUARD SIDE LH (GRAY)	1	
8	03541-0512A	SCREW	5	
9	77191-76F00	FILM	2	
10	09128-06090	SCREW (6X16)	2	
11	09132-05053	SCREW (5X16)	2	
12	09148-05044	NUT	2	
13	09409-07340	CLIP (6.8X11.5)	2	

FIG.718B

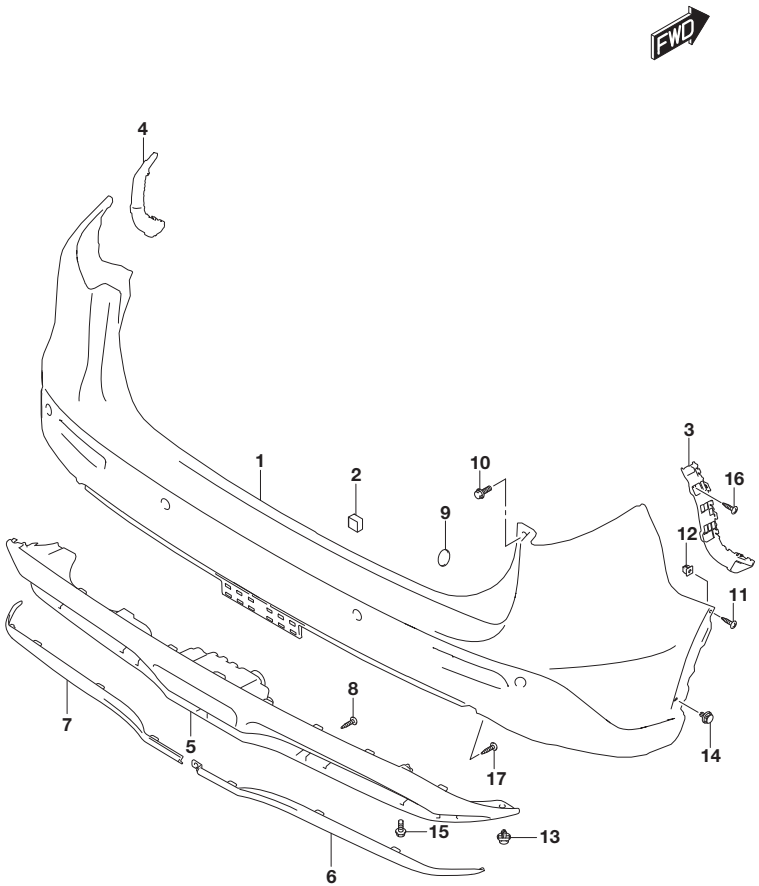

FIG.718B (3-H-13) REAR BUMPER (W/REAR CLEARANCE SONAR)

REF NO.	PART NO.	DESCRIPTION	Q'TY	REMARKS
14	09409-08327	CLIP (7.8X20)	2	
15	01551-0616C	BOLT	2	
16	03541-0516A	SCREW	6	
17	03541-0516A	SCREW	2	

FIG.720A

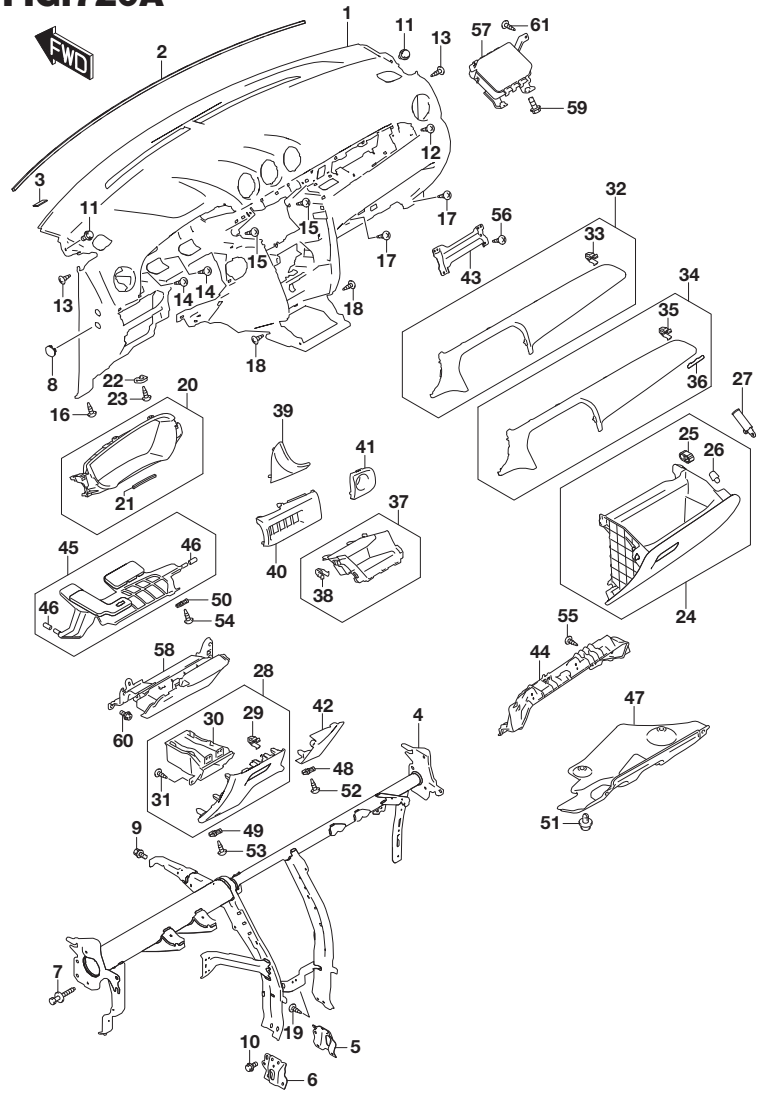

FIG.720A (3-H-14) INSTRUMENT PANEL (LHD)

REF NO.	PART NO.	DESCRIPTION	Q'TY	REMARKS
1	73110-86R10-5PK	PANEL, INSTRUMENT MAIN (BLACK)	1	
2	73114-54P00	SILENCER, I/P TOP	1	
3	73123-61M00	FELT	5	
4	73200-86R30	MEMBER, STEERING SUPPORT	1	
5	73261-54P00	BRACE, STRG SUPPORT MBR LWR RH	1	
6	73262-54P00	BRACE, STRG SUPPORT MBR LWR LH	1	
7	73291-50G03	BOLT, STRG SPRT MBR SIDE	4	
8	73891-83E00-5PK	CAP, I/P SIDE (BLACK)	3	
9	09116-06009	BOLT (6X20)	1	
10	01551-0816C	BOLT	8	
11	02162-0612A	SCREW	2	
12	03141-0512A	SCREW	1	
13	03141-0512A	SCREW	2	
14	03141-0512A	SCREW	2	
15	03141-0512A	SCREW	2	
16	03141-0512A	SCREW	1	
17	03141-0512A	SCREW	2	
18	03141-0512A	SCREW	2	
19	03541-0516A	SCREW	1	
20	73310-86R10-5PK	PANEL, INSTRUMENT CLUSTER (BLACK)	1	
21	73314-62J00	.SEAL, I/P CLUSTER	1	
22	09148-05045	NUT	2	
23	03141-0512A	SCREW	2	
24	73410-54P10-5PK	BOX, GLOVE (BLACK)	1	
25	73413-65D00	.CUSHION, GLOVE BOX	2	
26	73461-54M00	.CUSHION	2	
27	73440-50J01	DAMPER, GLOVE BOX	1	W/GLOVE BOX DAMPER
28	73810-54P30-5PK	COVER, STRG COLUMN HOLE (BLACK)	1	
29	09409-08342	.CLIP	1	
30	73812-54P00-5PK	.POCKET, STRG COLUMN HOLE COVER (BLACK)	1	
31	03541-0516A	.SCREW	4	
32-1	73822-86R30-QMC	ORNAMENT, I/P CENTER (SILVER)	1	2WD:GL
32-2	73822-86R30-QMD	ORNAMENT, I/P CENTER (BLACK)	1	2WD:GLX

FIG.720A

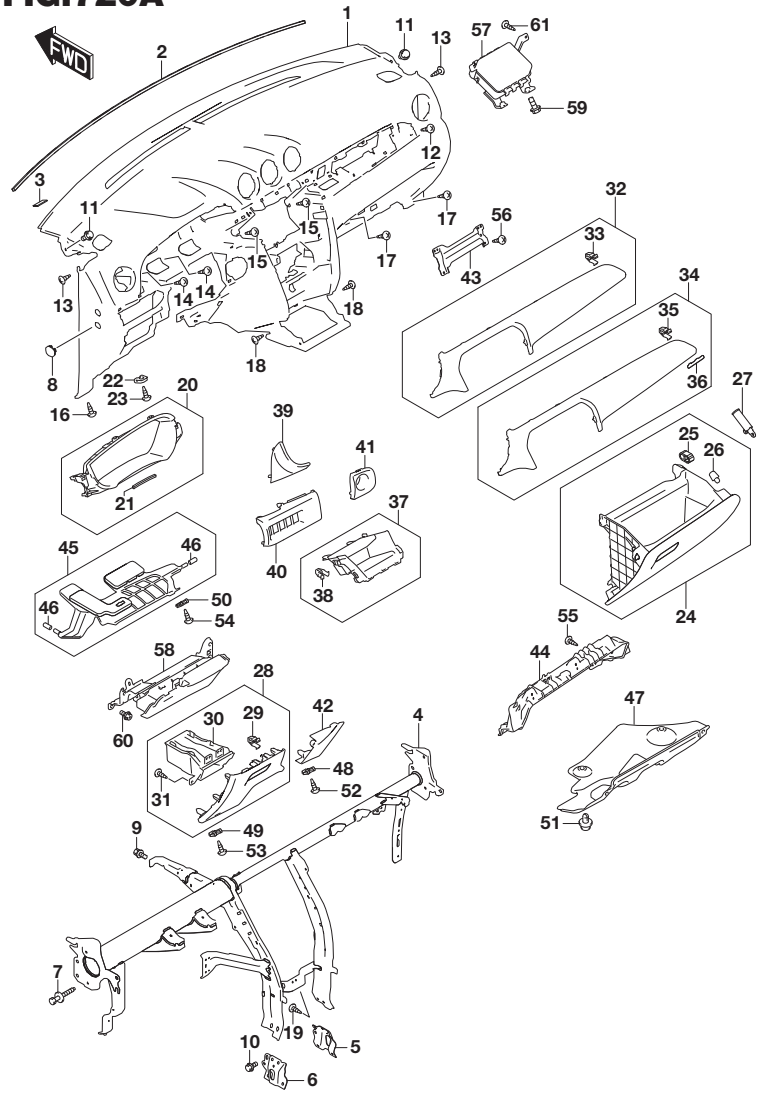

FIG.720A (3-H-15) INSTRUMENT PANEL (LHD)

REF NO.	PART NO.	DESCRIPTION	Q'TY	REMARKS
33	09409-08342	.CLIP	3	2WD
34-1	73820-86R30-DBW	ORNAMENT, I/P CENTER (SILVER/CHROME)	1	4WD:GL
34-2	73820-86R30-DBY	ORNAMENT, I/P CENTER (BLACK/CHROME)	1	4WD:GLX
35	09409-08342	.CLIP	3	4WD
36	73851-54P00-BML	.EMBLEM, ALL GRIP (CHROME/BLACK)	1	4WD
37-1	73823-54P00-5PK	BOX, I/P CENTER LOWER (BLACK)	1	N/SEAT HEATER
37-2	73823-54P10-5PK	BOX, I/P CENTER LOWER (BLACK)	1	W/SEAT HEATER
38	09409-08342	.CLIP	4	
39-1	73831-86R30-QMC	ORNAMENT, I/P DRVR (SILVER)	1	GL
39-2	73831-86R30-QMD	ORNAMENT, I/P DRVR (BLACK)	1	GLX
40	73832-86R10-5PK	BEZEL, I/P SW (BLACK)	1	
41-1	73833-54P00-5PK	COVER, DRVR INSIDE UPPER (BLACK)	1	N/PUSH START
41-2	73833-54P10-5PK	COVER, DRVR INSIDE UPPER (BLACK)	1	W/PUSH START
42	73834-54P10-5PK	COVER, DRVR INSIDE LOWER (BLACK)	1	
43	73835-86R10	REINF, I/P CTR ORNAMENT	1	
44	73841-54P10	COVER, GLOVE BOX UPR	1	
45	73870-61M10	COVER, I/P UNDER DRVR	1	
46	73132-57L00	.CAP, I/P PIN	2	
47	73881-86R10	COVER, I/P UNDER ASST	1	
48	09148-05045	NUT	1	
49	09148-05045	NUT	1	
50	09148-05045	NUT	2	
51	09409-07340	CLIP (6.8X11.5)	4	
52	03141-0512A	SCREW	1	
53	03141-0512A	SCREW	1	
54	03141-0512A	SCREW	2	
55	03541-0516A	SCREW	7	
56	03541-0516A	SCREW	4	

FIG.720A

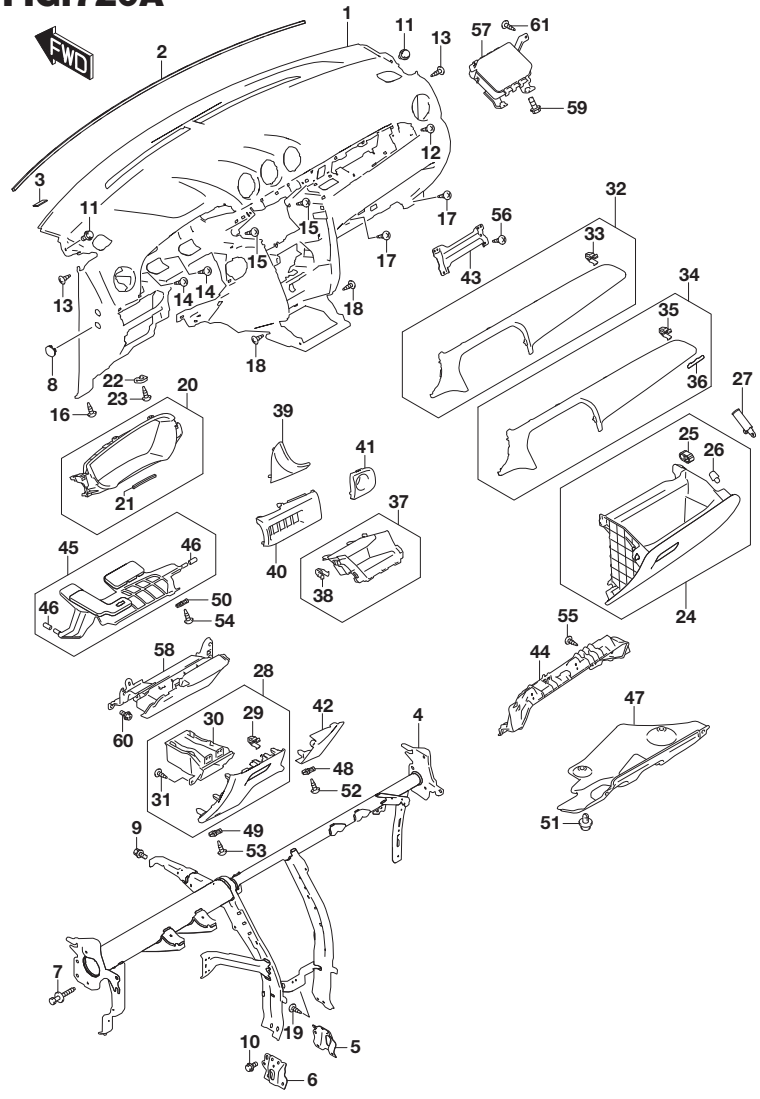

FIG.720A (3-I-2) INSTRUMENT PANEL (LHD)

REF NO.	PART NO.	DESCRIPTION	Q'TY	REMARKS
57	73910-86R00	MODULE ASSY, PASSENGER AIR BAG	1	SEE NOTE
58	73950-54P10-5PK	MODULE ASSY, DRVR KNEE AIR BAG (BLACK)	1	SEE NOTE
59	01551-0816C	BOLT	2	
60	02162-0616A	SCREW	4	
61	03541-0516A	SCREW	2	

NOTE : SPECIAL PROCEDURES ARE REQUIRED FOR SERVICING OR REPLACING AN AIR BAG. FOR THAT REASON, ONLY A FACTORY-AUTHORIZED DEALER, WHO IS SPECIALLY TRAINED, SHOULD BE ALLOWED TO SERVICE OR REPLACE YOUR AIR BAGS.

FIG.720B

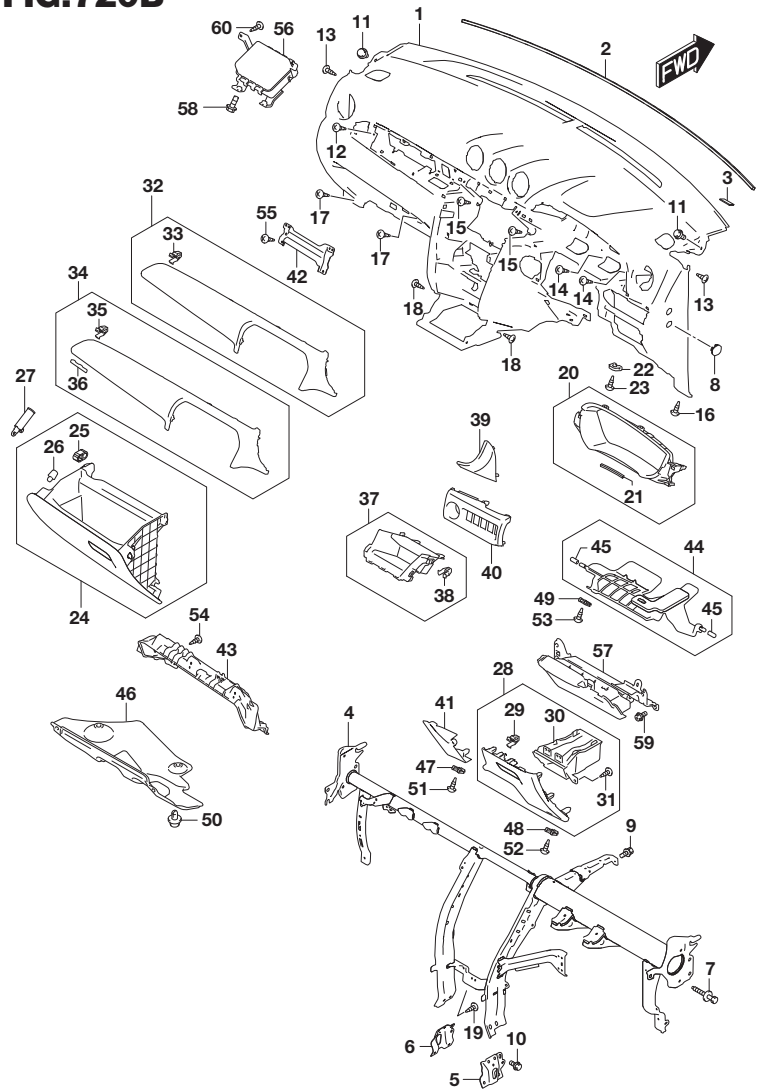

FIG.720B (3-I-3) INSTRUMENT PANEL (RHD)

REF NO.	PART NO.	DESCRIPTION	Q'TY	REMARKS
1	73110-86R01-5PK	PANEL, INSTRUMENT MAIN (BLACK)	1	
2	73114-54P00	SILENCER, I/P TOP	1	
3	73123-61M00	FELT	5	
4	73200-86R20	MEMBER, STEERING SUPPORT	1	
5	73261-54P00	BRACE, STRG SUPPORT MBR LWR RH	1	
6	73262-54P00	BRACE, STRG SUPPORT MBR LWR LH	1	
7	73291-50G03	BOLT, STRG SPRT MBR SIDE	4	
8	73891-83E00-5PK	CAP, I/P SIDE (BLACK)	3	
9	09116-06009	BOLT (6X20)	1	
10	01551-0816C	BOLT	8	
11	02162-0612A	SCREW	2	
12	03141-0512A	SCREW	1	
13	03141-0512A	SCREW	2	
14	03141-0512A	SCREW	2	
15	03141-0512A	SCREW	2	
16	03141-0512A	SCREW	1	
17	03141-0512A	SCREW	2	
18	03141-0512A	SCREW	2	
19	03541-0516A	SCREW	1	
20	73310-86R00-5PK	PANEL, INSTRUMENT CLUSTER (BLACK)	1	
21	73314-62J00	.SEAL, I/P CLUSTER	1	
22	09148-05045	NUT	2	
23	03141-0512A	SCREW	2	
24	73410-54P00-5PK	BOX, GLOVE (BLACK)	1	
25	73413-65D00	.CUSHION, GLOVE BOX	2	
26	73461-54M00	.CUSHION	2	
27	73440-50J01	DAMPER, GLOVE BOX	1	W/GLOVE BOX DAMPER
28	73810-54P20-5PK	COVER, STRG COLUMN HOLE (BLACK)	1	
29	09409-08342	.CLIP	1	
30	73812-54P00-5PK	.POCKET, STRG COLUMN HOLE COVER (BLACK)	1	
31	03541-0516A	.SCREW	4	
32-1	73822-86R20-QMC	ORNAMENT, I/P CENTER (SILVER)	1	2WD:GL
32-2	73822-86R20-QMD	ORNAMENT, I/P CENTER (BLACK)	1	2WD:GLX

FIG.720B

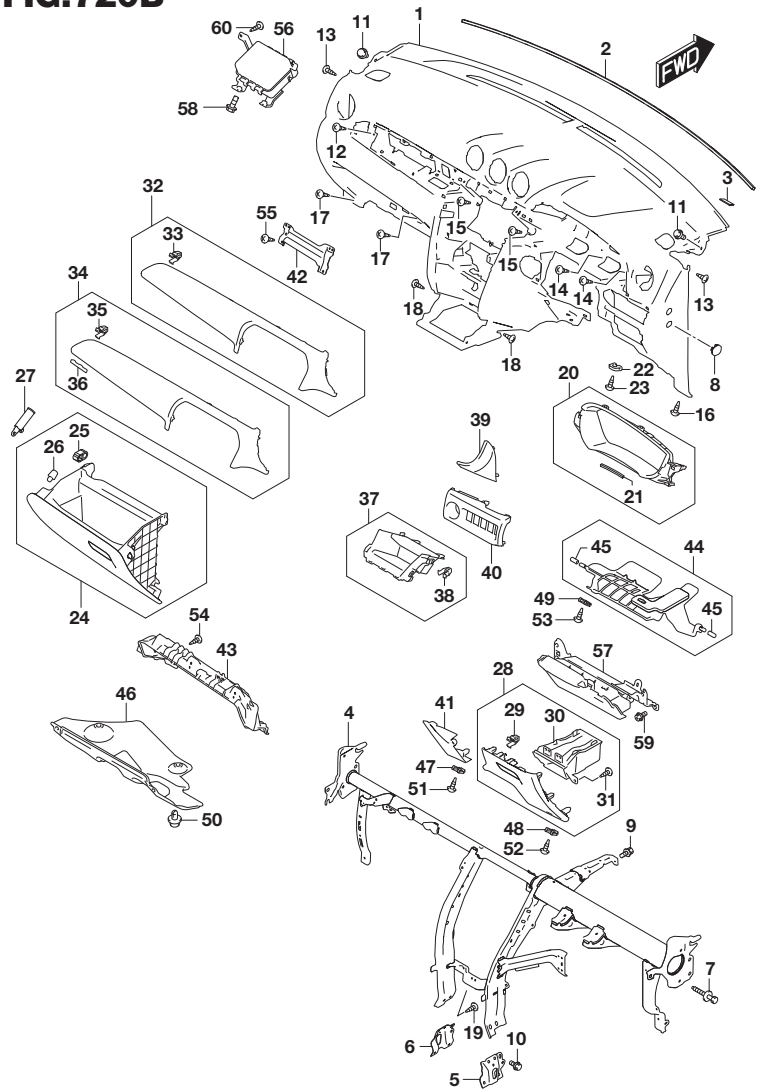

FIG.720B (3-I-4) INSTRUMENT PANEL (RHD)

REF NO.	PART NO.	DESCRIPTION	Q'TY	REMARKS
33	09409-08342	.CLIP	3	2WD
34-1	73820-86R20-DBW	ORNAMENT, I/P CENTER (SILVER/CHROME)	1	4WD:GL
34-2	73820-86R20-DBY	ORNAMENT, I/P CENTER (BLACK/CHROME)	1	4WD:GLX
35	09409-08342	.CLIP	3	4WD
36	73851-54P00-BML	.EMBLEM, ALL GRIP (CHROME/BLACK)	1	4WD
37	73823-54P00-5PK	BOX, I/P CENTER LOWER (BLACK)	1	
38	09409-08342	.CLIP	4	
39-1	73831-86R20-QMC	ORNAMENT, I/P DRVR (SILVER)	1	GL
39-2	73831-86R20-QMD	ORNAMENT, I/P DRVR (BLACK)	1	GLX
40-1	73832-86R00-5PK	BEZEL, I/P SW (BLACK)	1	N/PUSH START
40-2	73832-86R20-5PK	BEZEL, I/P SW (BLACK)	1	W/PUSH START
41	73834-54P00-5PK	COVER, DRVR INSIDE LOWER (BLACK)	1	
42	73835-86R00	REINF, I/P CTR ORNAMENT	1	
43	73841-54P00	COVER, GLOVE BOX UPR	1	
44	73870-61M00	COVER, I/P UNDER DRVR	1	
45	73132-57L00	.CAP, I/P PIN	2	
46	73881-86R00	COVER, I/P UNDER ASST	1	
47	09148-05045	NUT	1	
48	09148-05045	NUT	1	
49	09148-05045	NUT	2	
50	09409-07340	CLIP (6.8X11.5)	4	
51	03141-0512A	SCREW	1	
52	03141-0512A	SCREW	1	
53	03141-0512A	SCREW	2	
54	03541-0516A	SCREW	7	
55	03541-0516A	SCREW	4	

FIG.720B

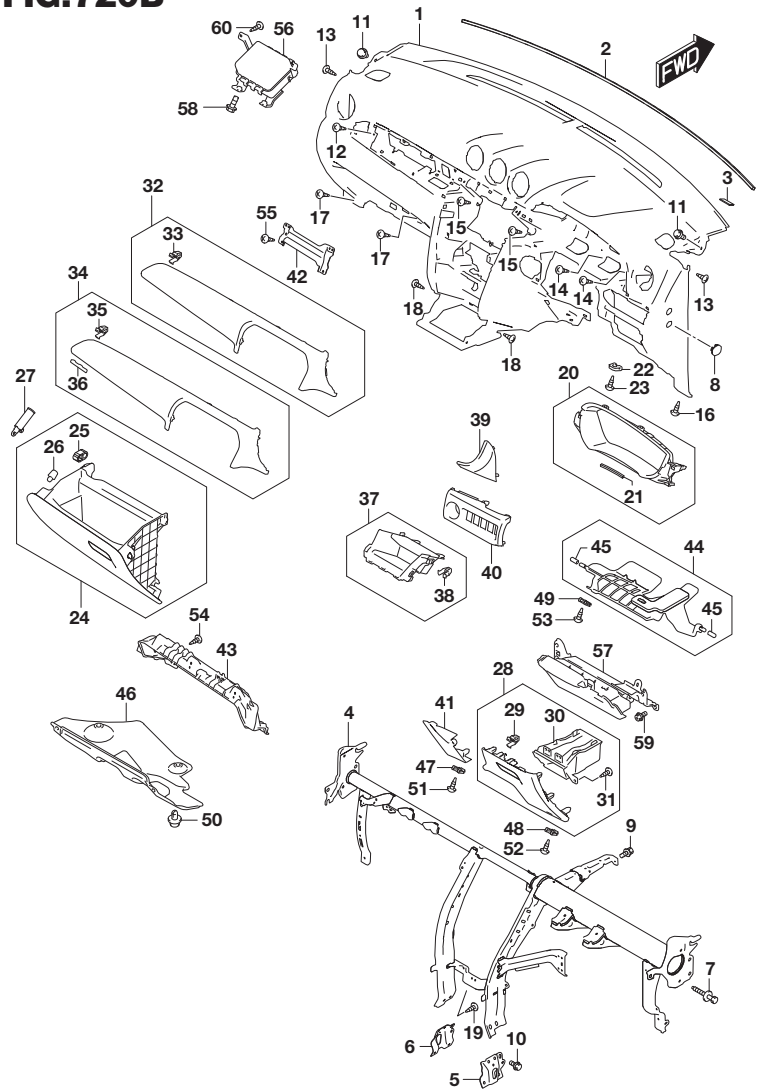

FIG.720B (3-I-5) INSTRUMENT PANEL (RHD)

REF NO.	PART NO.	DESCRIPTION	Q'TY	REMARKS
56	73910-86R00	MODULE ASSY, PASSENGER AIR BAG	1	SEE NOTE
57	73950-54P00-5PK	MODULE ASSY, DRVR KNEE AIR BAG (BLACK)	1	SEE NOTE
58	01551-0816C	BOLT	2	
59	02162-0616A	SCREW	4	
60	03541-0516A	SCREW	2	

NOTE : SPECIAL PROCEDURES ARE REQUIRED FOR SERVICING OR REPLACING AN AIR BAG. FOR THAT REASON, ONLY A FACTORY-AUTHORIZED DEALER, WHO IS SPECIALLY TRAINED, SHOULD BE ALLOWED TO SERVICE OR REPLACE YOUR AIR BAGS.

FIG.730A

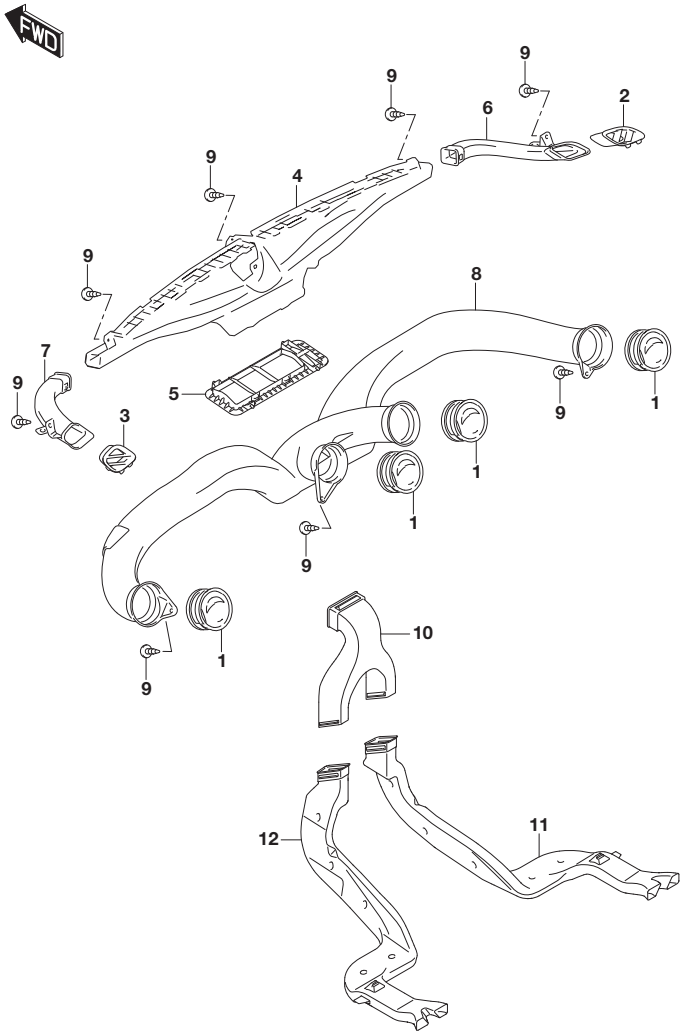

FIG.730A (3-I-6) VENTILATOR (LHD:(K10C,K14C))

REF NO.	PART NO.	DESCRIPTION	Q'TY	REMARKS
1-1	73630-54P00-5PK	LOUVER, SIDE VENT (BLACK)	4	GL COLOR:BLACK
1-2	73630-54P00-AQS	LOUVER, SIDE VENT (BLACK)	4	GL COLOR:BLACK/CHROME
1-3	73630-54P00-AQS	LOUVER, SIDE VENT (BLACK)	4	GLX
2	73651-54P10-5PK	NOZZLE, SIDE DEMISTER RH (BLACK)	1	
3	73652-54P10-5PK	NOZZLE, SIDE DEMISTER LH (BLACK)	1	
4	73661-54P10	NOZZLE, DFR	1	
5	73662-68L00	ADAPTER, DFR NOZZLE	1	
6	73681-54P00	DUCT, DEMISTER RH	1	
7	73691-54P00	DUCT, DEMISTER LH	1	
8	74620-54P10	DUCT, VENT	1	
9	03541-0516A	SCREW	8	
10	74651-61M00	DUCT, RR CTR	1	W/REAR HEATER DUCT
11	74652-61M00	DUCT, REAR RH	1	W/REAR HEATER DUCT
12	74653-61M00	DUCT, REAR LH	1	W/REAR HEATER DUCT

FIG.730B

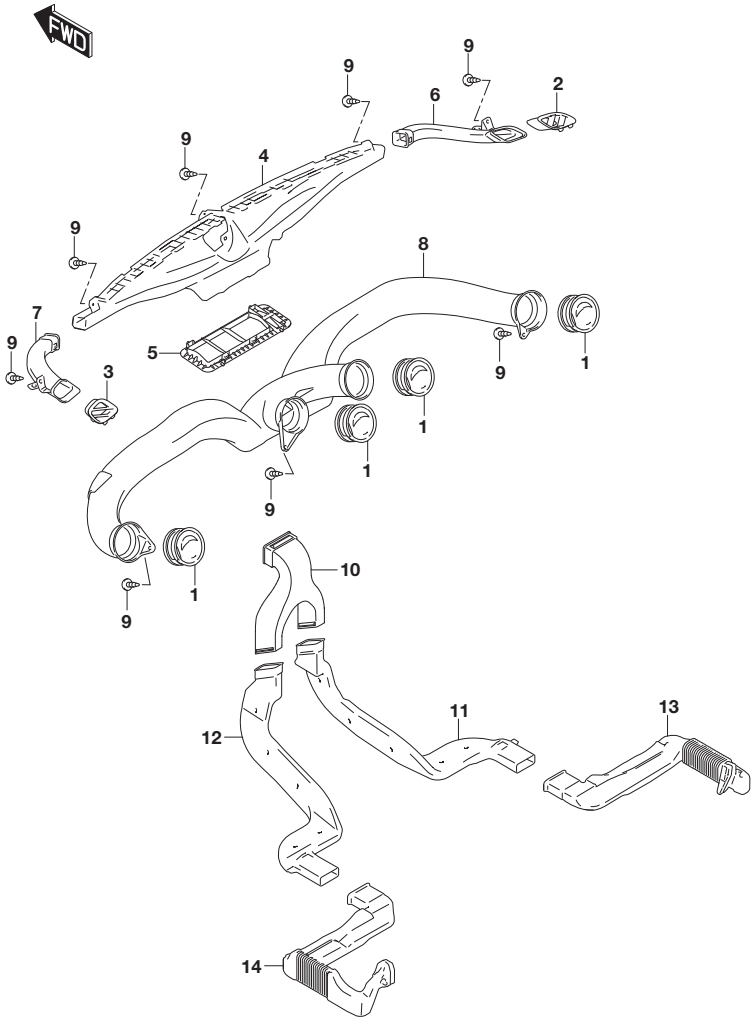

FIG.730B (3-I-7) VENTILATOR (LHD:K14D)

REF NO.	PART NO.	DESCRIPTION	Q'TY	REMARKS
1-1	73630-54P00-5PK	LOUVER, SIDE VENT (BLACK)	4	GL COLOR:BLACK
1-2	73630-54P00-AQS	LOUVER, SIDE VENT (BLACK)	4	GL COLOR:BLACK/CHROME
1-3	73630-54P00-AQS	LOUVER, SIDE VENT (BLACK)	4	GLX
2	73651-54P10-5PK	NOZZLE, SIDE DEMISTER RH (BLACK)	1	
3	73652-54P10-5PK	NOZZLE, SIDE DEMISTER LH (BLACK)	1	
4	73661-54P10	NOZZLE, DFR	1	
5	73662-68L00	ADAPTER, DFR NOZZLE	1	
6	73681-54P00	DUCT, DEMISTER RH	1	
7	73691-54P00	DUCT, DEMISTER LH	1	
8	74620-54P10	DUCT, VENT	1	
9	03541-0516A	SCREW	8	
10	74651-61M00	DUCT, RR CTR	1	W/REAR HEATER DUCT
11	74652-61M10	DUCT, REAR RH	1	W/REAR HEATER DUCT
12	74653-61M10	DUCT, REAR LH	1	W/REAR HEATER DUCT
13	74654-74S00	DUCT, REAR RH NO.2	1	
14	74655-74S00	DUCT, REAR LH NO.2	1	

FIG.730C

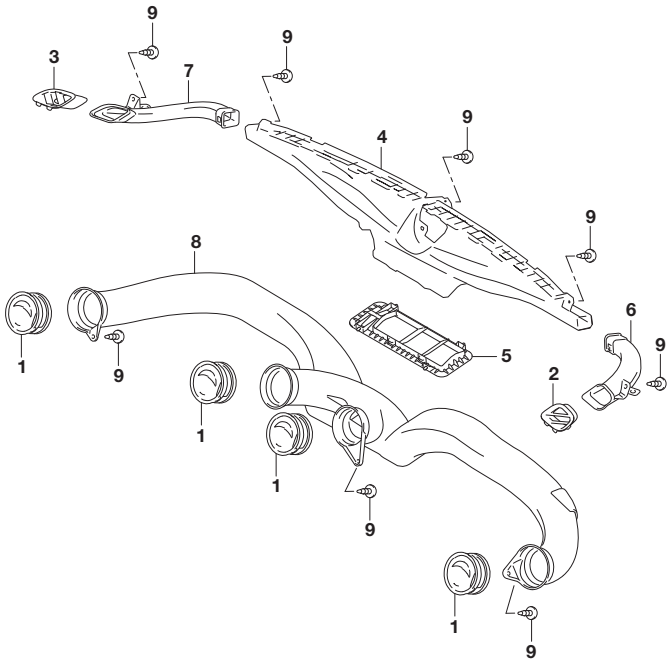

FIG.730C (3-I-8) VENTILATOR (RHD)

REF NO.	PART NO.	DESCRIPTION	Q'TY	REMARKS
1-1	73630-54P00-5PK	LOUVER, SIDE VENT (BLACK)	4	GL COLOR:BLACK
1-2	73630-54P00-AQS	LOUVER, SIDE VENT (BLACK)	4	GL COLOR:BLACK/CHROME
1-3	73630-54P00-AQS	LOUVER, SIDE VENT (BLACK)	4	GLX
2	73651-54P10-5PK	NOZZLE, SIDE DEMISTER RH (BLACK)	1	
3	73652-54P10-5PK	NOZZLE, SIDE DEMISTER LH (BLACK)	1	
4	73661-54P10	NOZZLE, DFR	1	
5	73662-68L00	ADAPTER, DFR NOZZLE	1	
6	73681-54P00	DUCT, DEMISTER RH	1	
7	73691-54P00	DUCT, DEMISTER LH	1	
8	74620-54P00	DUCT, VENT	1	
9	03541-0516A	SCREW	8	

FIG.732A

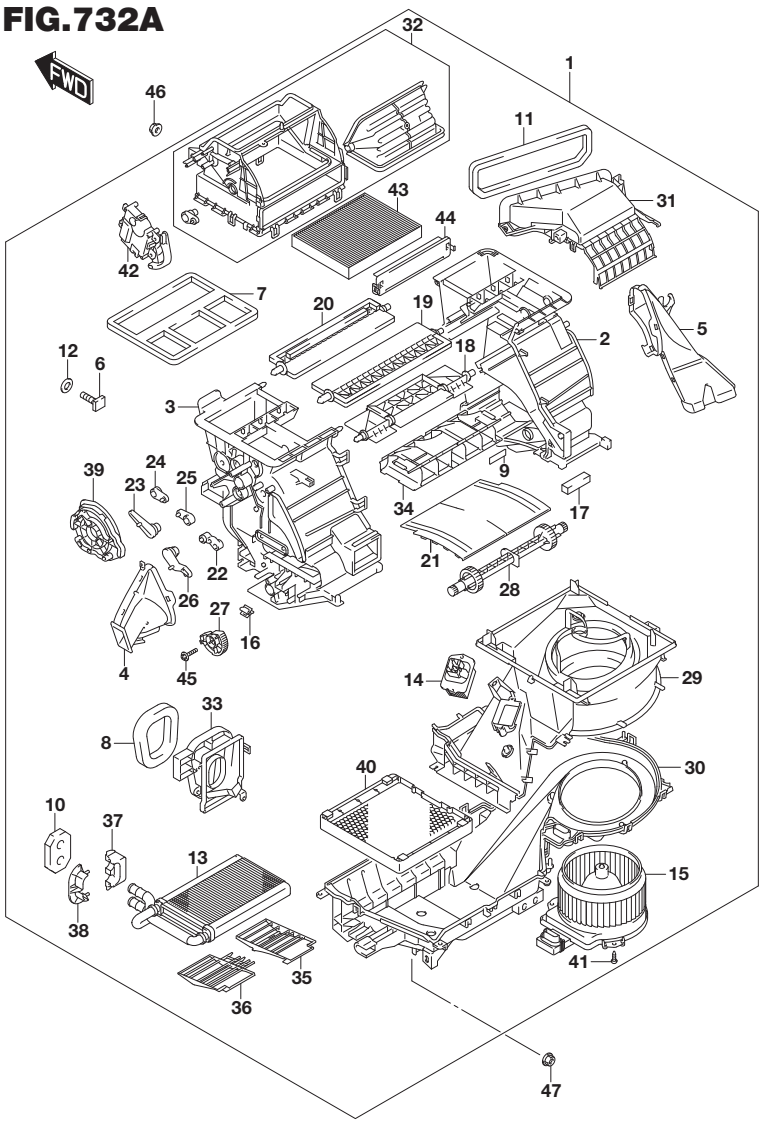

FIG.732A (3-I-9) HEATER UNIT (LHD:N/AIR CON)

REF NO.	PART NO.	DESCRIPTION	Q'TY	REMARKS
1-1	74100-61MA0	HVAC UNIT	1	N/REAR HEATER DUCT
1-2	74100-54PK0	HVAC UNIT	1	W/REAR HEATER DUCT
2-1	74111-61MA0	.CASE, HEATER RH	1	N/REAR HEATER DUCT
2-2	74111-61MC0	.CASE, HEATER RH	1	W/REAR HEATER DUCT
3-1	74112-61MA0	.CASE, HEATER LH	1	N/REAR HEATER DUCT
3-2	74112-61MC0	.CASE, HEATER LH	1	W/REAR HEATER DUCT
4	74114-61MA0	.DUCT ASSY, AIR FOOT DRVR	1	
5	74115-61MA0	.DUCT ASSY, AIR FOOT PASS	1	
6	74115-65D10	.BOLT	5	
7	74116-60P01	.PACKING SET, FACE DFR	1	
8	74117-61M00	.PACKING	1	
9	74118-61M00	.PACKING	2	
10	74118-63J01	.PACKING, HTR PIPE	1	
11	74119-63J00	.PACKING, AIR INTK	1	
12	74119-78F10	.BUSH	5	
13	74120-61MA0	.CORE ASSY, HEATER	1	
14	74140-61M00	.RESISTOR, BLOWER	1	
15	74150-61MA0	.MOTOR ASSY FAN	1	
16	74151-71B00	.CLAMP	2	
17	74163-61M00	.PACKING	2	
18	74172-61M10	.DOOR ASSY, AIR FACE	1	
19	74174-61M10	.DOOR ASSY, AIR FOOT	1	
20	74176-61M10	.DOOR ASSY, AIR DEFROSTER	1	
21	74178-61M10	.DOOR, AIR MIXTURE	1	
22	74191-61M00	.LEVER, FACE DR	1	
23	74192-61M00	.LEVER, DEFROSTER MIDDLE	1	
24	74193-61M00	.LEVER, DEFROSTER DR	1	
25	74194-61M00	.LEVER, FOOT DR	1	

FIG.732B(3-I-11) HEATER UNIT (LHD:W/MANUAL AIR CON)
FIG.732C(3-I-13) HEATER UNIT (LHD:W/AUTO AIR CON)
FIG.732D(3-J-2) HEATER UNIT (RHD:N/AIR CON)
FIG.732E(3-J-4) HEATER UNIT (RHD:W/MANUAL AIR CON)
FIG.732F(3-J-6) HEATER UNIT (RHD:W/AUTO AIR CON)

FIG.732A

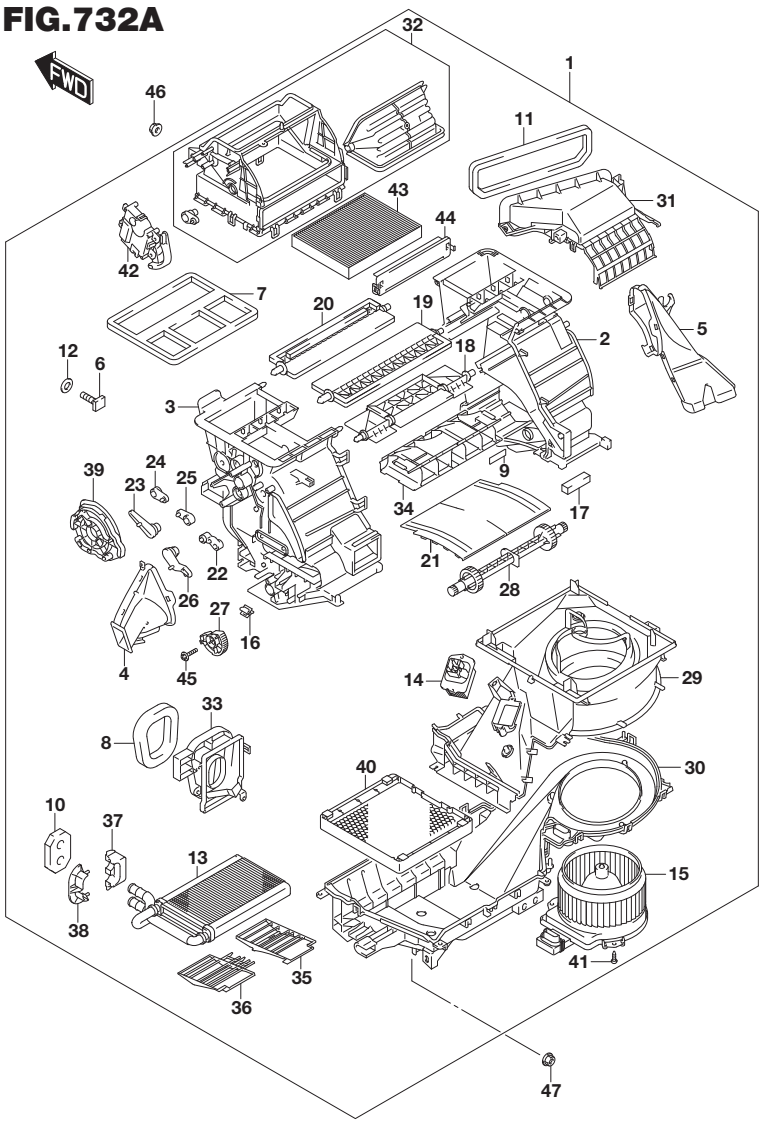

FIG.732A (3-I-10) HEATER UNIT (LHD:N/AIR CON)

REF NO.	PART NO.	DESCRIPTION	Q'TY	REMARKS
26	74195-61M00	.LEVER, FOOT MIDDLE	1	
27	74196-61M00	.LEVER, AIR MIXTURE	1	
28	74197-61M10	.SHAFT	1	
29	74211-61MA0	.CASE, BLOWER UPR	1	
30	74212-61MA0	.CASE, BLOWER LWR	1	
31	74213-61MA0	.CASE, BLOWER	1	
32	74214-61M10	.CASE ASSY, BLOWER	1	
33	74215-61M30	.COVER, HEATER	1	
34	74216-61M10	.DUCT, AIR	1	
35	74218-61M00	.DUCT, AIR	1	
36	74219-61M00	.DUCT, AIR	1	
37	74220-61M00	.CLAMP	1	
38	74221-61M00	.CLAMP	1	
39	74222-61M00	.PLATE	1	
40	74223-61M00	.PLATE	1	
41	94135-82000	.SCREW	3	
42	95655-61M00	.SERVO, ACCESSORY	1	
43	95860-61M00	.FILTER ASSY	1	W/REAR HEATER DUCT
44	95861-61M10	.HOLDER, FILTER	1	
45	03112-0416A	.SCREW	16	
46	09159-06086	NUT	5	
47	08361-2506A	NUT	1	

FIG.732B

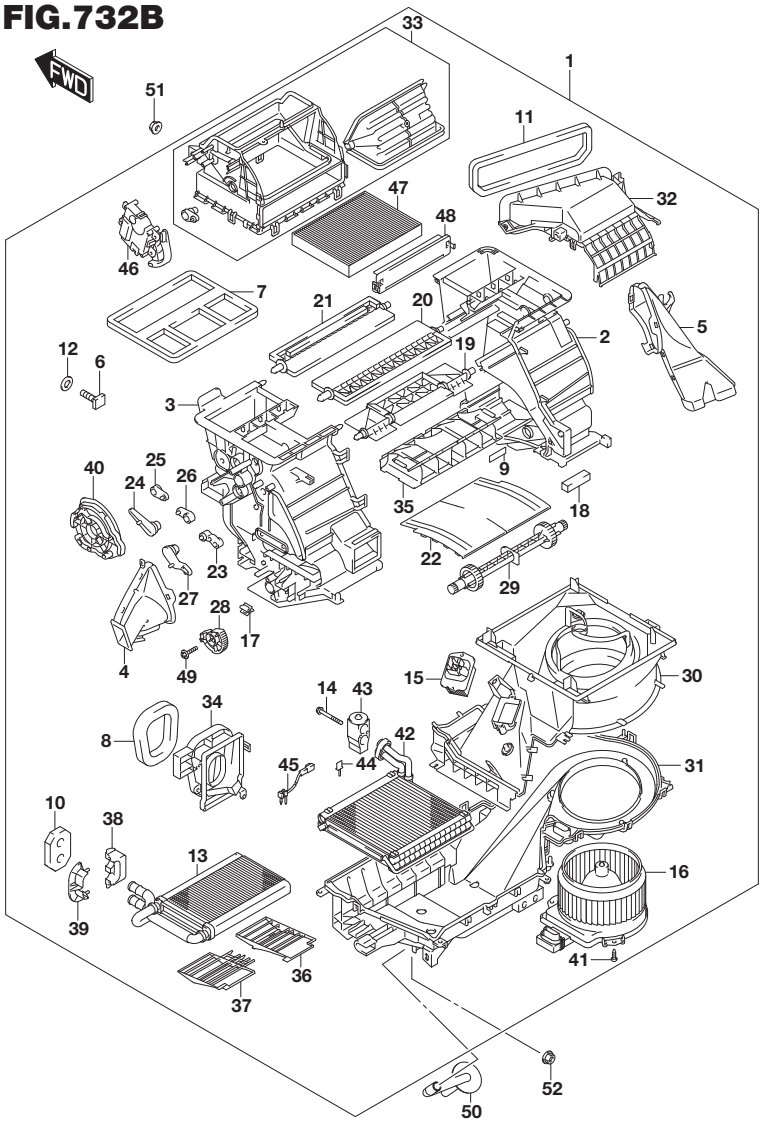

FIG.732B (3-I-11) HEATER UNIT (LHD:W/MANUAL AIR CON)

REF NO.	PART NO.	DESCRIPTION	Q'TY	REMARKS
1-1	74100-61MF1	HVAC UNIT	1	N/REAR HEATER DUCT
1-2	74100-61MG1	HVAC UNIT	1	W/REAR HEATER DUCT
2-1	74111-61MA0	.CASE, HEATER RH	1	N/REAR HEATER DUCT
2-2	74111-61MC0	.CASE, HEATER RH	1	W/REAR HEATER DUCT
3-1	74112-61MA0	.CASE, HEATER LH	1	N/REAR HEATER DUCT
3-2	74112-61MC0	.CASE, HEATER LH	1	W/REAR HEATER DUCT
4	74114-61MA0	.DUCT ASSY, AIR FOOT DRVR	1	
5	74115-61MA0	.DUCT ASSY, AIR FOOT PASS	1	
6	74115-65D10	.BOLT	5	
7	74116-60P01	.PACKING SET, FACE DFR	1	
8	74117-61M00	.PACKING	1	
9	74118-61M00	.PACKING	2	
10	74118-63J01	.PACKING, HTR PIPE	1	
11	74119-63J00	.PACKING, AIR INTK	1	
12	74119-78F10	.BUSH	5	
13	74120-61MA0	.CORE ASSY, HEATER	1	
14	74134-58J00	.BOLT	2	
15	74140-61M00	.RESISTOR, BLOWER	1	
16	74150-61MA0	.MOTOR ASSY FAN	1	
17	74151-71B00	.CLAMP	2	
18	74163-61M00	.PACKING	2	
19	74172-61M10	.DOOR ASSY, AIR FACE	1	
20	74174-61M10	.DOOR ASSY, AIR FOOT	1	
21	74176-61M10	.DOOR ASSY, AIR DEFROSTER	1	
22	74178-61M10	.DOOR, AIR MIXTURE	1	
23	74191-61M00	.LEVER, FACE DR	1	
24	74192-61M00	.LEVER, DEFROSTER MIDDLE	1	
25	74193-61M00	.LEVER, DEFROSTER DR	1	
26	74194-61M00	.LEVER, FOOT DR	1	
27	74195-61M00	.LEVER, FOOT MIDDLE	1	
28	74196-61M00	.LEVER, AIR MIXTURE	1	
29	74197-61M10	.SHAFT	1	
30	74211-61MA0	.CASE, BLOWER UPR	1	
31	74212-61MA0	.CASE, BLOWER LWR	1	
32	74213-61MA0	.CASE, BLOWER	1	
33	74214-61M10	.CASE ASSY, BLOWER	1	

FIG.732B

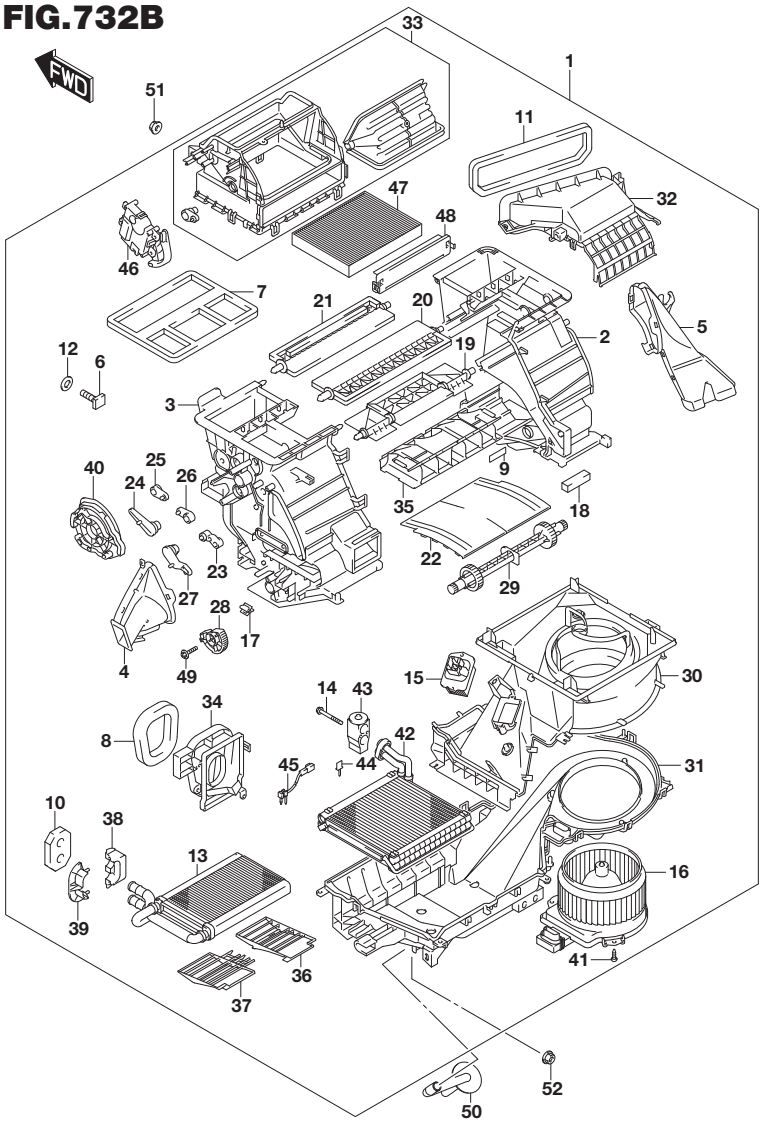

FIG.732B (3-I-12) HEATER UNIT (LHD:W/MANUAL AIR CON)

REF NO.	PART NO.	DESCRIPTION	Q'TY	REMARKS
34	74215-61M10	.COVER, HEATER	1	
35	74216-61M10	.DUCT, AIR	1	
36	74218-61M00	.DUCT, AIR	1	
37	74219-61M00	.DUCT, AIR	1	
38	74220-61M00	.CLAMP	1	
39	74221-61M00	.CLAMP	1	
40	74222-61M00	.PLATE	1	
41	94135-82000	.SCREW	3	
42	95411-61M11	.EVAPORATOR ASSY	1	
43	95431-61M20	.VALVE, EXPANSION	1	
44	95452-63J00	.CLAMP	1	
45	95541-61M00	.THERMISTOR ASSY	1	
46	95655-61M00	.SERVO, ACCESSORY	1	
47	95860-61M00	.FILTER ASSY	1	
48	95861-61M10	.HOLDER, FILTER	1	
49	03112-0416A	.SCREW	16	
50	95481-61M00	HOSE, DRAIN	1	
51	09159-06086	NUT	5	
52	08361-2506A	NUT	1	

FIG.732C

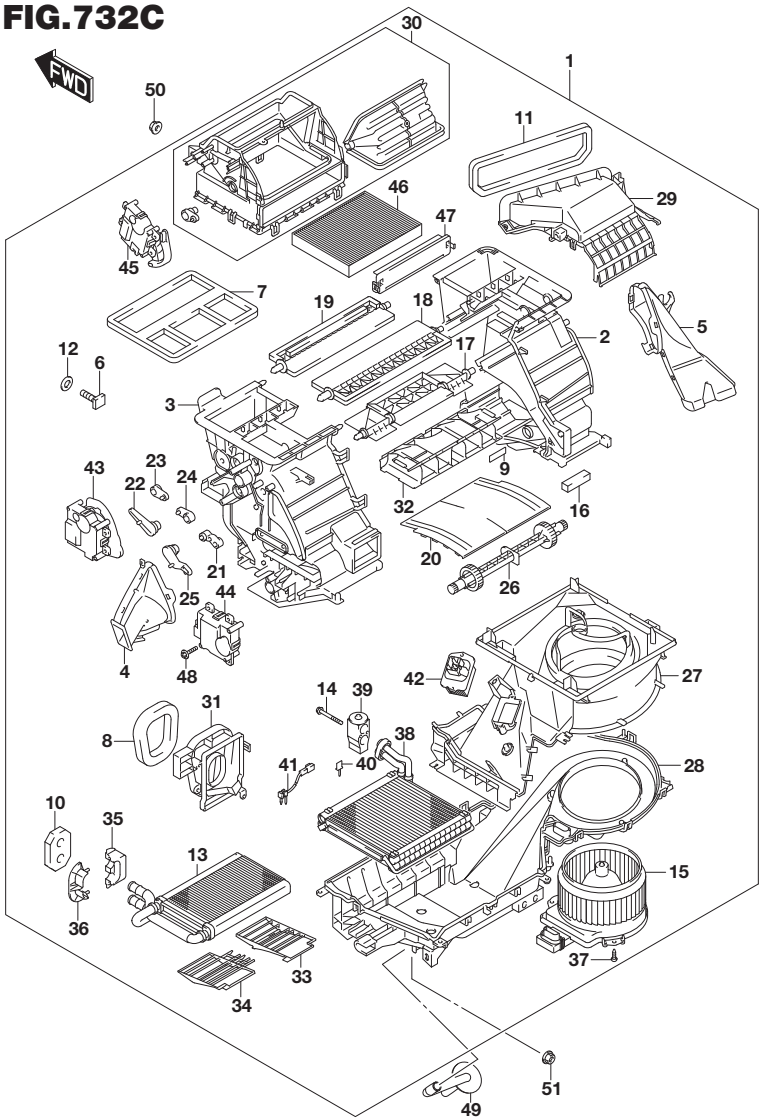

FIG.732C (3-I-13) HEATER UNIT (LHD:W/AUTO AIR CON)

REF NO.	PART NO.	DESCRIPTION	Q'TY	REMARKS
1-1	74100-54PH1	HVAC UNIT	1	N/REAR HEATER DUCT
1-2	74100-54PJ1	HVAC UNIT	1	W/REAR HEATER DUCT
2-1	74111-61MD0	.CASE, HEATER RH	1	N/REAR HEATER DUCT
2-2	74111-61ME0	.CASE, HEATER RH	1	W/REAR HEATER DUCT
3-1	74112-61MD0	.CASE, HEATER LH	1	N/REAR HEATER DUCT
3-2	74112-61ME0	.CASE, HEATER LH	1	W/REAR HEATER DUCT
4	74114-61MA0	.DUCT ASSY, AIR FOOT DRVR	1	
5	74115-61MA0	.DUCT ASSY, AIR FOOT PASS	1	
6	74115-65D10	.BOLT	5	
7	74116-60P01	.PACKING SET, FACE DFR	1	
8	74117-61M00	.PACKING	1	
9	74118-61M00	.PACKING	2	
10	74118-63J01	.PACKING, HTR PIPE	1	
11	74119-63J00	.PACKING, AIR INTK	1	
12	74119-78F10	.BUSH	5	
13	74120-61MA0	.CORE ASSY, HEATER	1	
14	74134-58J00	.BOLT	2	
15	74150-61MA0	.MOTOR ASSY FAN	1	
16	74163-61M00	.PACKING	2	
17	74172-61M10	.DOOR ASSY, AIR FACE	1	
18	74174-61M10	.DOOR ASSY, AIR FOOT	1	
19	74176-61M10	.DOOR ASSY, AIR DEFROSTER	1	
20	74178-61M10	.DOOR, AIR MIXTURE	1	
21	74191-61M00	.LEVER, FACE DR	1	
22	74192-61M00	.LEVER, DEFROSTER MIDDLE	1	
23	74193-61M00	.LEVER, DEFROSTER DR	1	
24	74194-61M00	.LEVER, FOOT DR	1	
25	74195-61M00	.LEVER, FOOT MIDDLE	1	
26	74197-54P00	.SHAFT	1	
27	74211-61MA0	.CASE, BLOWER UPR	1	
28	74212-61MA0	.CASE, BLOWER LWR	1	
29	74213-61MA0	.CASE, BLOWER	1	
30	74214-61M30	.CASE ASSY, BLOWER	1	
31	74215-61M10	.COVER, HEATER	1	
32	74216-61M10	.DUCT, AIR	1	
33	74218-61M00	.DUCT, AIR	1	

FIG.732C

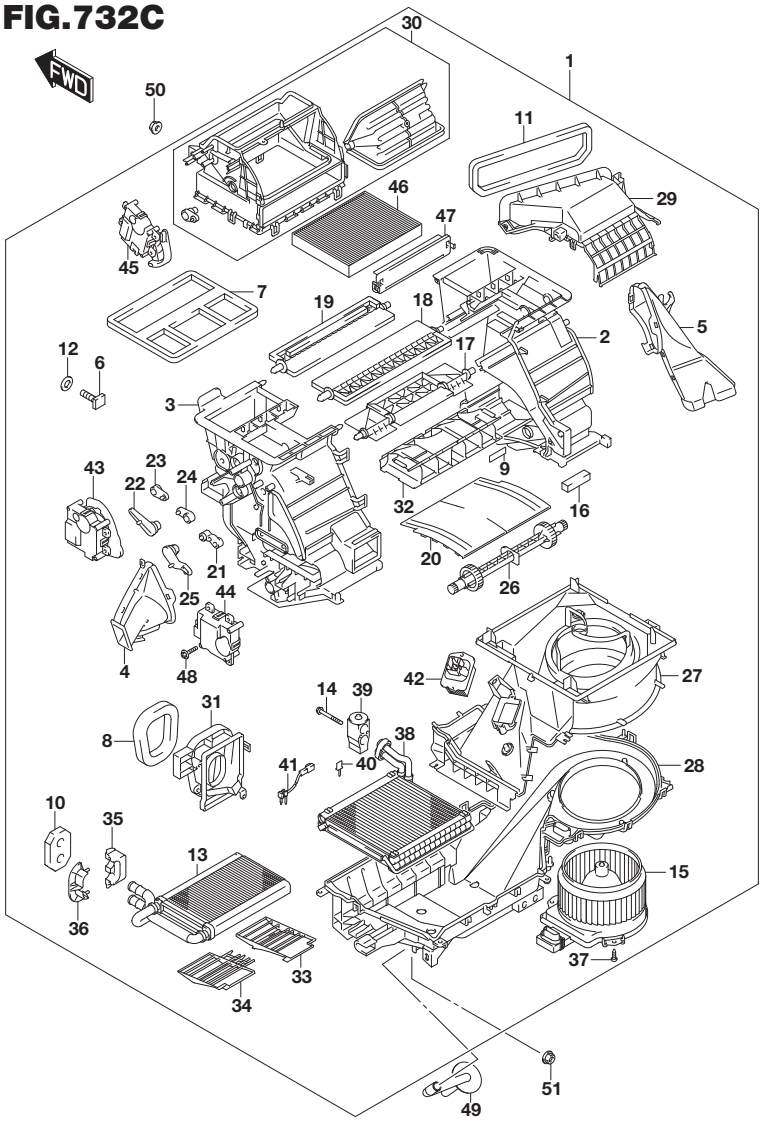

FIG.732C (3-I-14) HEATER UNIT (LHD:W/AUTO AIR CON)

REF NO.	PART NO.	DESCRIPTION	Q'TY	REMARKS
34	74219-61M00	.DUCT, AIR	1	
35	74220-61M00	.CLAMP	1	
36	74221-61M00	.CLAMP	1	
37	94135-82000	.SCREW	3	
38	95411-61M11	.EVAPORATOR ASSY	1	
39	95431-61M20	.VALVE, EXPANSION	1	
40	95452-63J00	.CLAMP	1	
41	95541-61M00	.THERMISTOR ASSY	1	
42	95626-61M00	.POWER TRANSISTOR ASSY	1	
43	95651-61M00	.SERVO ACCESSORY, MODE	1	
44	95652-61M00	.SERVO ACCESSORY LH	1	
45	95654-61M00	.SERVO ACCESSORY	1	
46	95860-61M00	.FILTER ASSY	1	
47	95861-61M00	.HOLDER, FILTER	1	
48	03112-0416A	.SCREW	20	
49	95481-61M00	HOSE, DRAIN	1	
50	09159-06086	NUT	5	
51	08361-2506A	NUT	1	

FIG.732D

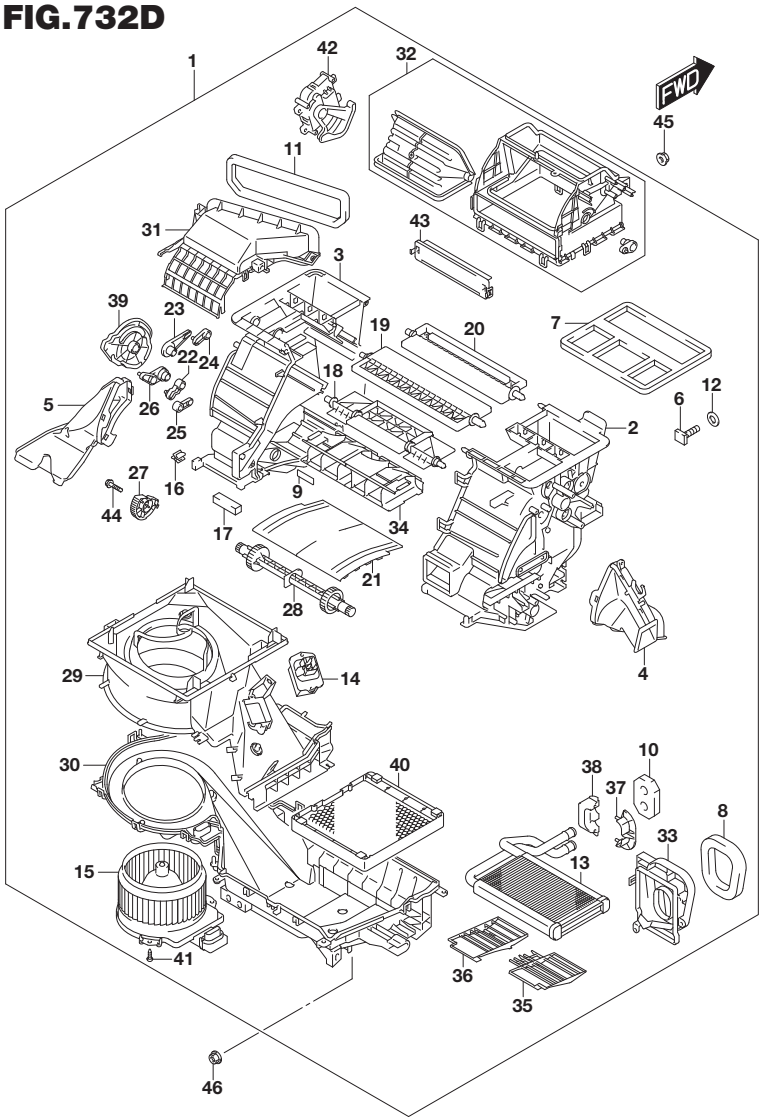

FIG.732D (3-J-2) HEATER UNIT (RHD:N/AIR CON)

REF NO.	PART NO.	DESCRIPTION	Q'TY	REMARKS
1	74100-61M00	HVAC UNIT	1	
2	74111-61M00	.CASE, HEATER RH	1	
3	74112-61M00	.CASE, HEATER LH	1	
4	74114-61M00	.DUCT ASSY, AIR FOOT DRVR	1	
5	74115-61M00	.DUCT ASSY, AIR FOOT PASS	1	
6	74115-65D10	.BOLT	5	
7	74116-60P01	.PACKING SET, FACE DFR	1	
8	74117-61M00	.PACKING	1	
9	74118-61M00	.PACKING	2	
10	74118-63J01	.PACKING, HTR PIPE	1	
11	74119-63J00	.PACKING, AIR INTK	1	
12	74119-78F10	.BUSH	5	
13	74120-61M00	.CORE ASSY, HEATER	1	
14	74140-61M00	.RESISTOR, BLOWER	1	
15	74150-61M00	.MOTOR ASSY, FAN	1	
16	74151-71B00	.CLAMP	2	
17	74163-61M00	.PACKING	2	
18	74172-61M10	.DOOR ASSY, AIR FACE	1	
19	74174-61M10	.DOOR ASSY, AIR FOOT	1	
20	74176-61M10	.DOOR ASSY, AIR DEFROSTER	1	
21	74178-61M10	.DOOR, AIR MIXTURE	1	
22	74191-61M00	.LEVER, FACE DR	1	
23	74192-61M00	.LEVER, DEFROSTER MIDDLE	1	
24	74193-61M00	.LEVER, DEFROSTER DR	1	
25	74194-61M00	.LEVER, FOOT DR	1	
26	74195-61M00	.LEVER, FOOT MIDDLE	1	
27	74196-61M00	.LEVER, AIR MIXTURE	1	
28	74197-61M10	.SHAFT	1	
29	74211-61M00	.CASE, BLOWER UPR	1	
30	74212-61M00	.CASE, BLOWER LWR	1	
31	74213-61M00	.CASE, BLOWER	1	
32	74214-61M00	.CASE ASSY, BLOWER	1	
33	74215-61M20	.COVER, HEATER	1	
34	74216-61M10	.DUCT, AIR	1	
35	74218-61M00	.DUCT, AIR	1	
36	74219-61M00	.DUCT, AIR	1	

FIG.732D

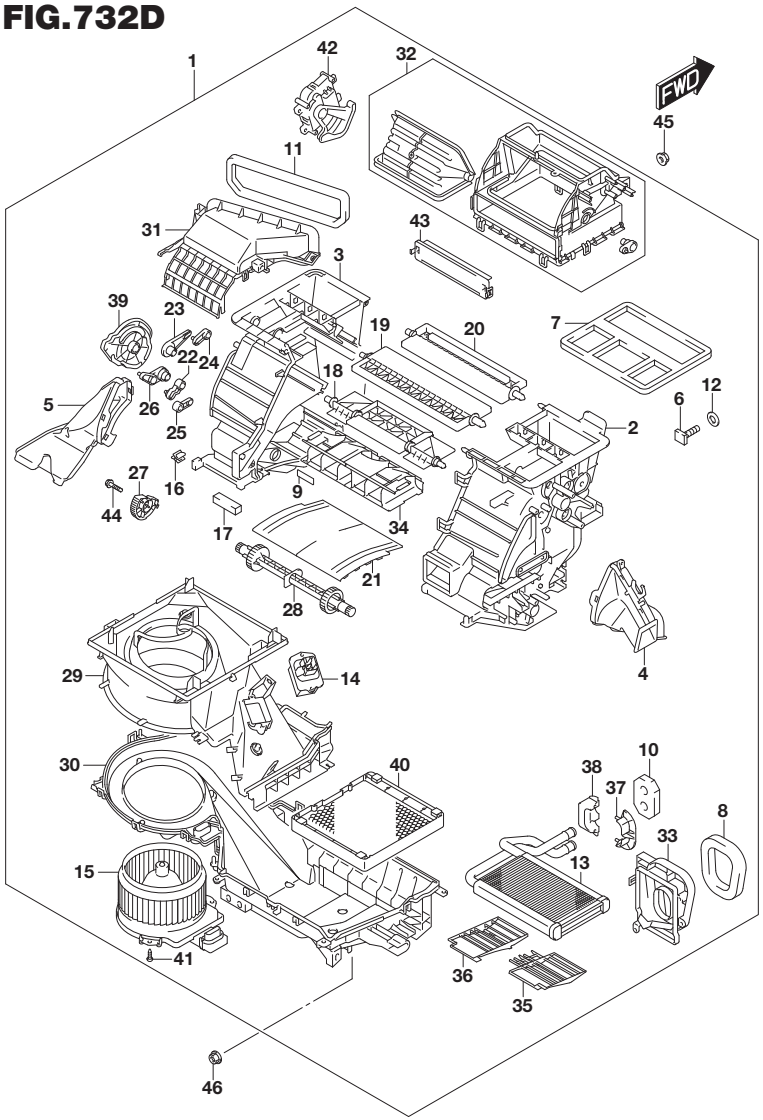

FIG.732D (3-J-3) HEATER UNIT (RHD:N/AIR CON)

REF NO.	PART NO.	DESCRIPTION	Q'TY	REMARKS
37	74220-61M00	.CLAMP	1	
38	74221-61M00	.CLAMP	1	
39	74222-61M00	.PLATE	1	
40	74223-61M00	.PLATE	1	
41	94135-82000	.SCREW	3	
42	95655-61M00	.SERVO, ACCESSORY	1	
43	95861-61M10	.HOLDER, FILTER	1	
44	03112-0416A	.SCREW	16	
45	09159-06086	NUT	5	
46	08361-2506A	NUT	1	

FIG.732E

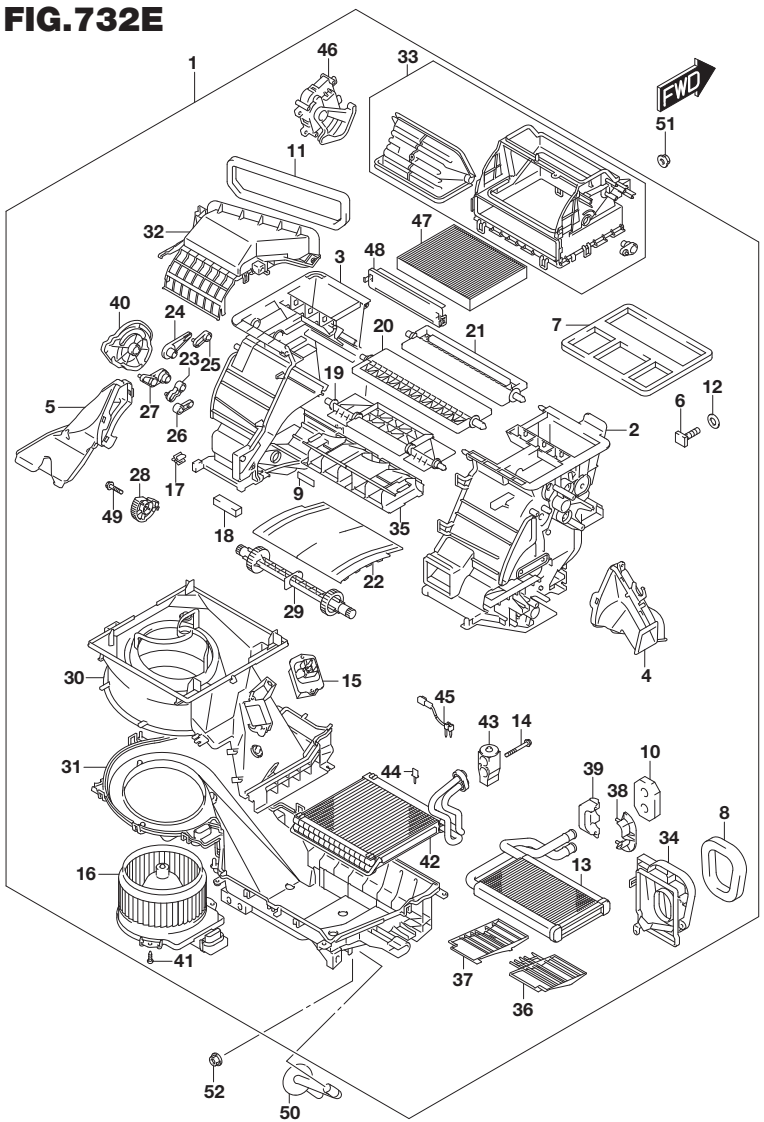

FIG.732E (3-J-4) HEATER UNIT (RHD:W/MANUAL AIR CON)

REF NO.	PART NO.	DESCRIPTION	Q'TY	REMARKS
1	74100-61M51	HVAC UNIT	1	
2	74111-61M00	.CASE, HEATER RH	1	
3	74112-61M00	.CASE, HEATER LH	1	
4	74114-61M00	.DUCT ASSY, AIR FOOT DRVR	1	
5	74115-61M00	.DUCT ASSY, AIR FOOT PASS	1	
6	74115-65D10	.BOLT	5	
7	74116-60P01	.PACKING SET, FACE DFR	1	
8	74117-61M00	.PACKING	1	
9	74118-61M00	.PACKING	2	
10	74118-63J01	.PACKING, HTR PIPE	1	
11	74119-63J00	.PACKING, AIR INTK	1	
12	74119-78F10	.BUSH	5	
13	74120-61M00	.CORE ASSY, HEATER	1	
14	74134-58J00	.BOLT	2	
15	74140-61M00	.RESISTOR, BLOWER	1	
16	74150-61M00	.MOTOR ASSY, FAN	1	
17	74151-71B00	.CLAMP	2	
18	74163-61M00	.PACKING	2	
19	74172-61M10	.DOOR ASSY, AIR FACE	1	
20	74174-61M10	.DOOR ASSY, AIR FOOT	1	
21	74176-61M10	.DOOR ASSY, AIR DEFROSTER	1	
22	74178-61M10	.DOOR, AIR MIXTURE	1	
23	74191-61M00	.LEVER, FACE DR	1	
24	74192-61M00	.LEVER, DEFROSTER MIDDLE	1	
25	74193-61M00	.LEVER, DEFROSTER DR	1	
26	74194-61M00	.LEVER, FOOT DR	1	
27	74195-61M00	.LEVER, FOOT MIDDLE	1	
28	74196-61M00	.LEVER, AIR MIXTURE	1	
29	74197-61M10	.SHAFT	1	
30	74211-61M00	.CASE, BLOWER UPR	1	
31	74212-61M00	.CASE, BLOWER LWR	1	
32	74213-61M00	.CASE, BLOWER	1	
33	74214-61M00	.CASE ASSY, BLOWER	1	
34	74215-61M00	.COVER, HEATER	1	
35	74216-61M10	.DUCT, AIR	1	
36	74218-61M00	.DUCT, AIR	1	

FIG.732E

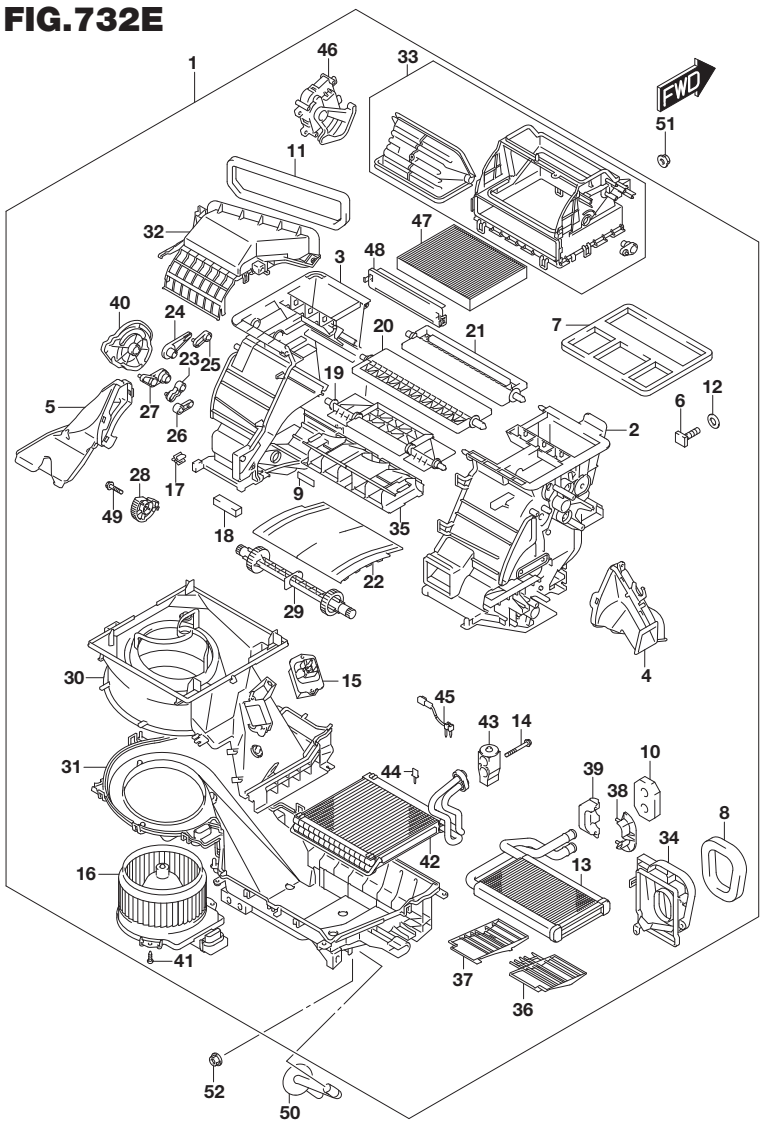

FIG.732E (3-J-5) HEATER UNIT (RHD:W/MANUAL AIR CON)

REF NO.	PART NO.	DESCRIPTION	Q'TY	REMARKS
37	74219-61M00	.DUCT, AIR	1	
38	74220-61M00	.CLAMP	1	
39	74221-61M00	.CLAMP	1	
40	74222-61M00	.PLATE	1	
41	94135-82000	.SCREW	3	
42	95411-61M01	.EVAPORATOR ASSY	1	
43	95431-61M20	.VALVE, EXPANSION	1	
44	95452-63J00	.CLAMP	1	
45	95541-61M00	.THERMISTOR ASSY	1	
46	95655-61M00	.SERVO, ACCESSORY	1	
47	95860-61M00	.FILTER ASSY	1	
48	95861-61M10	.HOLDER, FILTER	1	
49	03112-0416A	.SCREW	16	
50	95481-61M00	HOSE, DRAIN	1	
51	09159-06086	NUT	5	
52	08361-2506A	NUT	1	

FIG.732F

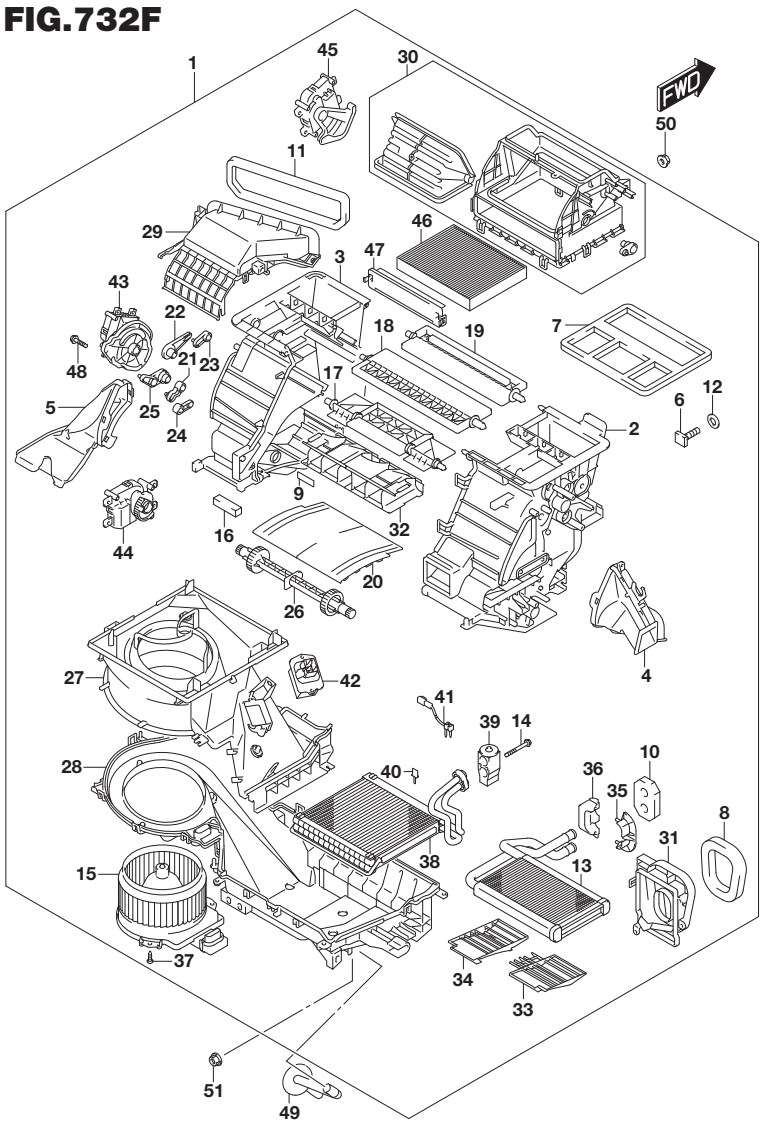

FIG.732F (3-J-6) HEATER UNIT (RHD:W/AUTO AIR CON)

REF NO.	PART NO.	DESCRIPTION	Q'TY	REMARKS
1	74100-54P71	HVAC UNIT	1	
2	74111-61M30	.CASE, HEATER RH	1	
3	74112-61M30	.CASE, HEATER LH	1	
4	74114-61M00	.DUCT ASSY, AIR FOOT DRVR	1	
5	74115-61M00	.DUCT ASSY, AIR FOOT PASS	1	
6	74115-65D10	.BOLT	5	
7	74116-60P01	.PACKING SET, FACE DFR	1	
8	74117-61M00	.PACKING	1	
9	74118-61M00	.PACKING	2	
10	74118-63J01	.PACKING, HTR PIPE	1	
11	74119-63J00	.PACKING, AIR INTK	1	
12	74119-78F10	.BUSH	5	
13	74120-61M00	.CORE ASSY, HEATER	1	
14	74134-58J00	.BOLT	2	
15	74150-61M00	.MOTOR ASSY, FAN	1	
16	74163-61M00	.PACKING	2	
17	74172-61M10	.DOOR ASSY, AIR FACE	1	
18	74174-61M10	.DOOR ASSY, AIR FOOT	1	
19	74176-61M10	.DOOR ASSY, AIR DEFROSTER	1	
20	74178-61M10	.DOOR, AIR MIXTURE	1	
21	74191-61M00	.LEVER, FACE DR	1	
22	74192-61M00	.LEVER, DEFROSTER MIDDLE	1	
23	74193-61M00	.LEVER, DEFROSTER DR	1	
24	74194-61M00	.LEVER, FOOT DR	1	
25	74195-61M00	.LEVER, FOOT MIDDLE	1	
26	74197-54P00	.SHAFT	1	
27	74211-61M00	.CASE, BLOWER UPR	1	
28	74212-61M00	.CASE, BLOWER LWR	1	
29	74213-61M00	.CASE, BLOWER	1	
30	74214-61M20	.CASE ASSY, BLOWER	1	
31	74215-61M00	.COVER, HEATER	1	
32	74216-61M10	.DUCT, AIR	1	
33	74218-61M00	.DUCT, AIR	1	
34	74219-61M00	.DUCT, AIR	1	
35	74220-61M00	.CLAMP	1	
36	74221-61M00	.CLAMP	1	

FIG.732F

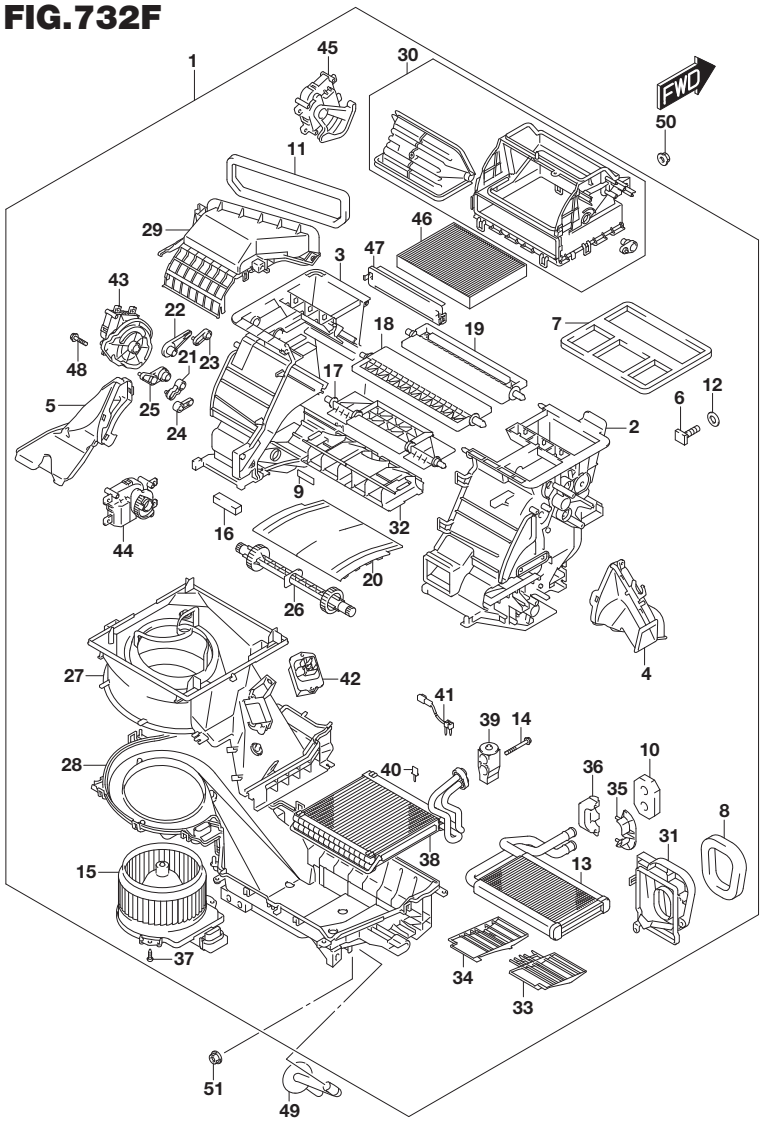

FIG.732F (3-J-7) HEATER UNIT (RHD:W/AUTO AIR CON)

REF NO.	PART NO.	DESCRIPTION	Q'TY	REMARKS
37	94135-82000	.SCREW	3	
38	95411-61M01	.EVAPORATOR ASSY	1	
39	95431-61M20	.VALVE, EXPANSION	1	
40	95452-63J00	.CLAMP	1	
41	95541-61M00	.THERMISTOR ASSY	1	
42	95626-61M00	.POWER TRANSISTOR ASSY	1	
43	95651-61M00	.SERVO ACCESSORY, MODE	1	
44	95652-61M00	.SERVO ACCESSORY LH	1	
45	95654-61M00	.SERVO ACCESSORY	1	
46	95860-61M00	.FILTER ASSY	1	
47	95861-61M00	.HOLDER, FILTER	1	
48	03112-0416A	.SCREW	20	
49	95481-61M00	HOSE, DRAIN	1	
50	09159-06086	NUT	5	
51	08361-2506A	NUT	1	

FIG.73AA

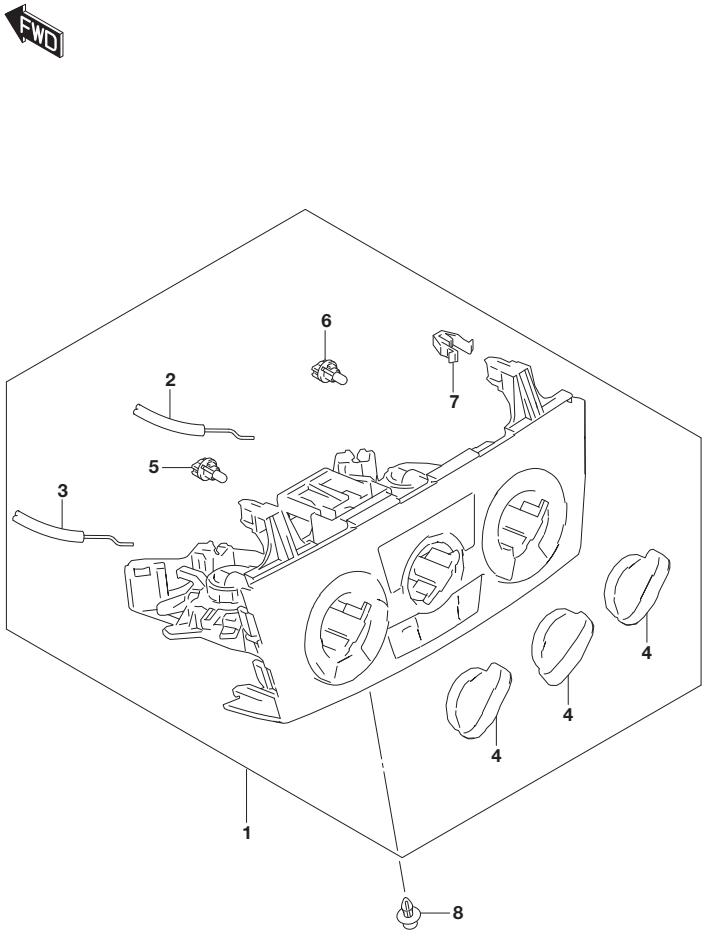

FIG.73AA (3-J-8) HEATER CONTROL (N/AIR CON,W/MANUAL AIR CON)

REF NO.	PART NO.	DESCRIPTION	Q'TY	REMARKS
1-1	74400-54P30-5PK	CONTROL UNIT, HVAC (BLACK)	1	N/AIR CON:LHD
1-2	74400-54P20-5PK	CONTROL UNIT, HVAC (BLACK)	1	N/AIR CON:RHD
1-3	74400-54P10-5PK	CONTROL UNIT, HVAC (BLACK)	1	W/MANUAL AIR CON:LHD
1-4	74400-54P00-5PK	CONTROL UNIT, HVAC (BLACK)	1	W/MANUAL AIR CON:RHD
2-1	74451-54P10	.CABLE, MODE CONTROL	1	LHD
2-2	74451-54P00	.CABLE, MODE CONTROL	1	RHD
3-1	74452-54P10	.CABLE, TEMP CONTROL	1	LHD
3-2	74452-54P00	.CABLE, TEMP CONTROL	1	RHD
4	74461-61M00-5PK	.KNOB, HVAC CONTROL (BLACK)	3	
5	74531-68L00	.BULB	1	
6	74532-68L00	.BULB	1	
7	09409-08342	.CLIP	2	
8	09409-06322	CLIP	2	

FIG.73AB

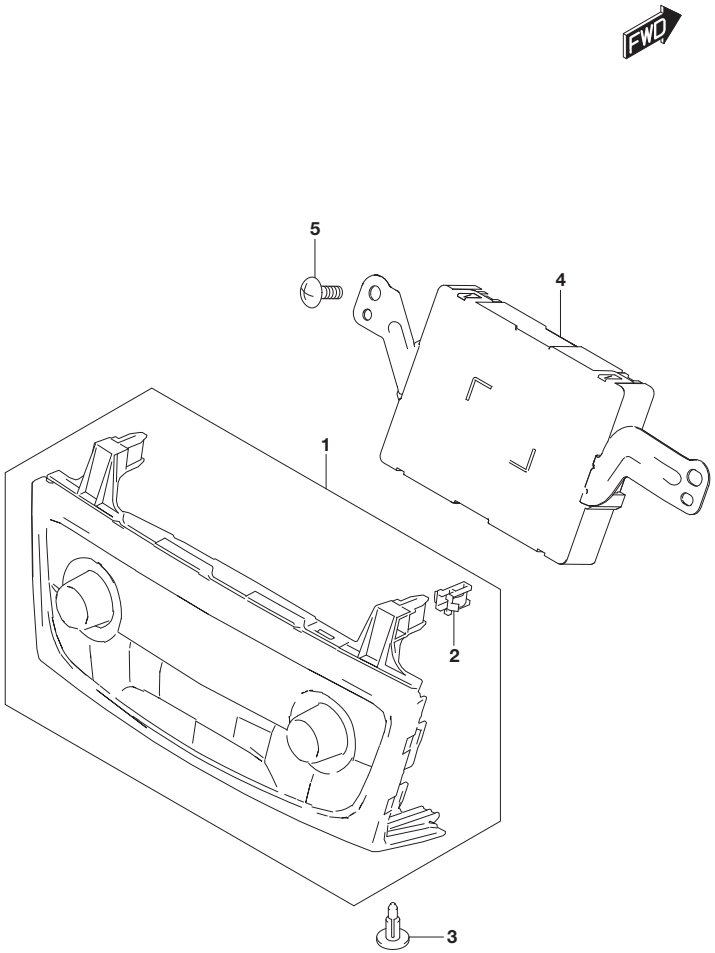

FIG.73AB (3-J-9) HEATER CONTROL (W/AUTO AIR CON)

REF NO.	PART NO.	DESCRIPTION	Q'TY	REMARKS
1	39510-54P00-AQK	PANEL UNIT, AUTO A/C (CHROME/BLACK)	1	
2	09409-08342	.CLIP	2	
3	09409-06322	CLIP	2	
4-1	39530-86R00	CONTROLLER UNIT, AUTO A/C	1	K10C,K14C
4-2	39530-86R10	CONTROLLER UNIT, AUTO A/C	1	K14D
5	03541-0516A	SCREW	2	

FIG.740A

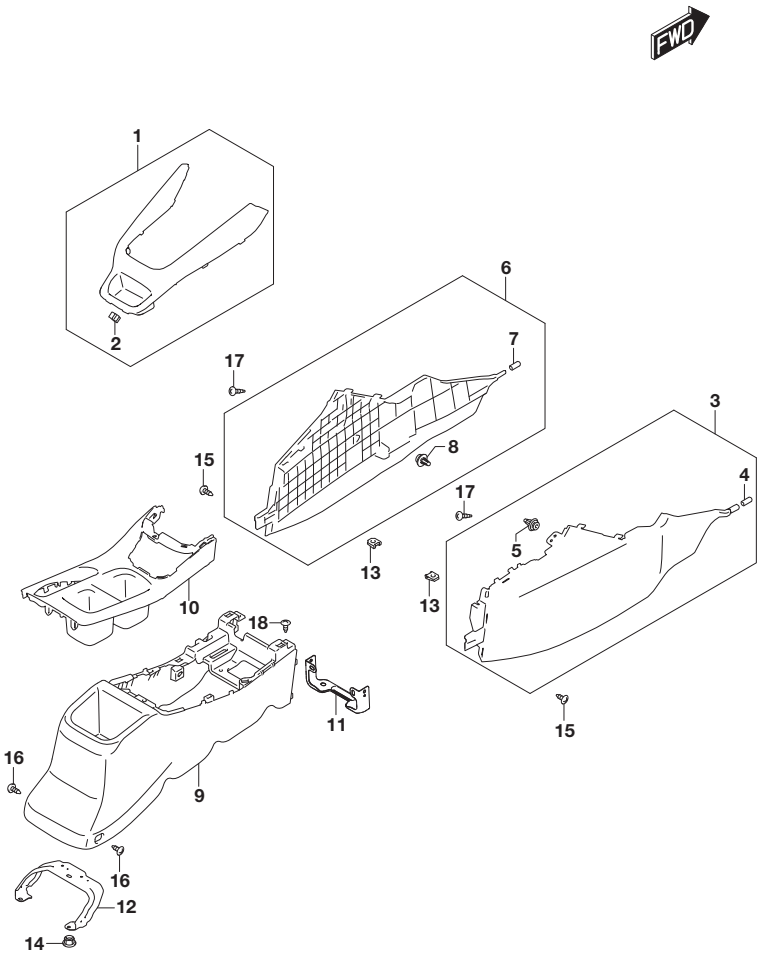

FIG.740A (3-J-10) CONSOLE BOX (2WD:N/CONSOLE ARMREST)

REF NO.	PART NO.	DESCRIPTION	Q'TY	REMARKS
1	75811-54P00-5PK	ORNAMENT, FLOOR CONSOLE FR (BLACK)	1	
2	09409-08342	.CLIP	4	
3	75830-54P00-5PK	COVER, FLOOR CONSOLE FR RH (BLACK)	1	
4	73132-57L00	.CAP, I/P PIN	1	
5	09409-10312	.CLIP	1	
6	75840-54P00-5PK	COVER, FLOOR CONSOLE FR LH (BLACK)	1	
7	73132-57L00	.CAP, I/P PIN	1	
8	09409-10312	.CLIP	1	
9-1	75850-54P00-5PK	BOX, FL CSL RR (BLACK)	1	K10C
9-2	75850-74S10-5PK	BOX, FL CSL RR (BLACK)	1	K14D
10	75860-54P00-5PK	PANEL, FLOOR CONSOLE RR (BLACK)	1	
11	75871-61M00	BRACKET, FL CSL BOX FR	1	
12	75872-54P00	BRACKET, FL CSL BOX RR	1	
13	09148-05045	NUT	2	
14	09159-06076	NUT	2	
15	03141-0512A	SCREW	2	
16	03141-0512B	SCREW	2	
17	03541-0516A	SCREW	2	
18	03541-0516A	SCREW	2	

FIG.740B(3-J-11) CONSOLE BOX (2WD:W/CONSOLE ARMREST)
FIG.740C(3-J-12) CONSOLE BOX (4WD:N/CONSOLE ARMREST)
FIG.740D(3-J-13) CONSOLE BOX (4WD:W/CONSOLE ARMREST)

FIG.740B

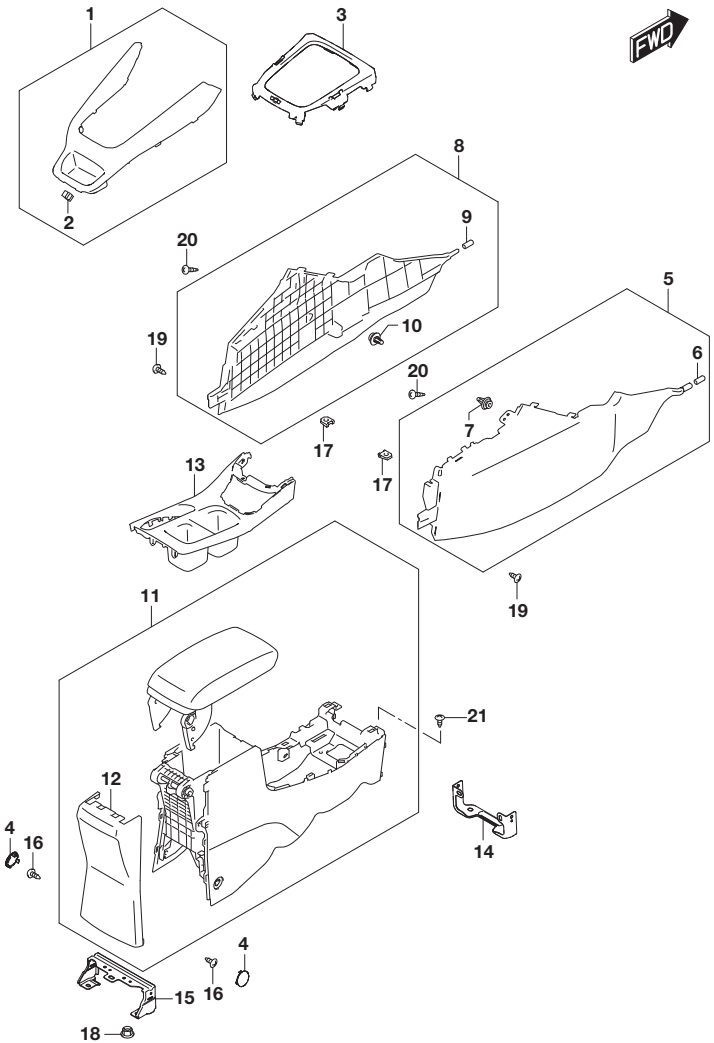

FIG.740B (3-J-11) CONSOLE BOX (2WD:W/CONSOLE ARMREST)

REF NO.	PART NO.	DESCRIPTION	Q'TY	REMARKS
1	75811-54P21-QMC	ORNAMENT, FLOOR CONSOLE FR (SILVER)	1	
2	09409-08342	.CLIP	4	
3	75822-61M10-5PK	GARNISH, GEAR SHIFT (BLACK)	1	6AT
4	75825-61M00-5PK	CAP, FLOOR CONSOLE RR (BLACK)	2	
5	75830-54P00-5PK	COVER, FLOOR CONSOLE FR RH (BLACK)	1	
6	73132-57L00	.CAP, I/P PIN	1	
7	09409-10312	.CLIP	1	
8	75840-54P00-5PK	COVER, FLOOR CONSOLE FR LH (BLACK)	1	
9	73132-57L00	.CAP, I/P PIN	1	
10	09409-10312	.CLIP	1	
11-1	75850-61M00-5PK	BOX, FL CSL RR (BLACK)	1	K10C,K14C
11-2	75850-74S00-5PK	BOX, FL CSL RR (BLACK)	1	K14D
12	75852-61M00-5PK	.COVER, FLOOR CONSOLE RR (BLACK)	1	
13	75860-54P00-5PK	PANEL, FLOOR CONSOLE RR (BLACK)	1	
14	75871-61M00	BRACKET, FL CSL BOX FR	1	
15	75872-61M00	BRACKET, FL CSL BOX RR	1	
16	09125-05140	SCREW (5X16)	2	
17	09148-05045	NUT	2	
18	09159-06076	NUT	2	
19	03141-0512A	SCREW	2	
20	03541-0516A	SCREW	2	
21	03541-0516A	SCREW	2	

FIG.740C

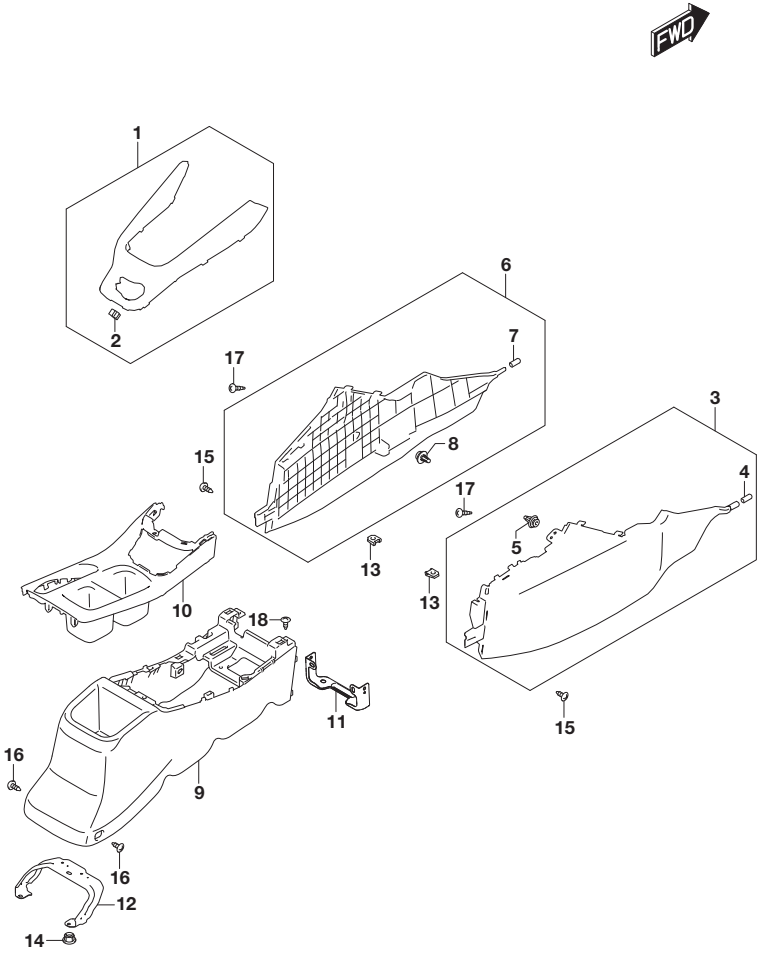

FIG.740C (3-J-12) CONSOLE BOX (4WD:N/CONSOLE ARMREST)

REF NO.	PART NO.	DESCRIPTION	Q'TY	REMARKS
1	75811-54P10-5PK	ORNAMENT, FL CSL FR (BLACK)	1	
2	09409-08342	.CLIP	4	
3	75830-54P00-5PK	COVER, FLOOR CONSOLE FR RH (BLACK)	1	
4	73132-57L00	.CAP, I/P PIN	1	
5	09409-10312	.CLIP	1	
6	75840-54P00-5PK	COVER, FLOOR CONSOLE FR LH (BLACK)	1	
7	73132-57L00	.CAP, I/P PIN	1	
8	09409-10312	.CLIP	1	
9	75850-54P00-5PK	BOX, FL CSL RR (BLACK)	1	
10	75860-54P00-5PK	PANEL, FLOOR CONSOLE RR (BLACK)	1	
11	75871-61M00	BRACKET, FL CSL BOX FR	1	
12	75872-54P00	BRACKET, FL CSL BOX RR	1	
13	09148-05045	NUT	2	
14	09159-06076	NUT	2	
15	03141-0512A	SCREW	2	
16	03141-0512B	SCREW	2	
17	03541-0516A	SCREW	2	
18	03541-0516A	SCREW	2	

FIG.740D

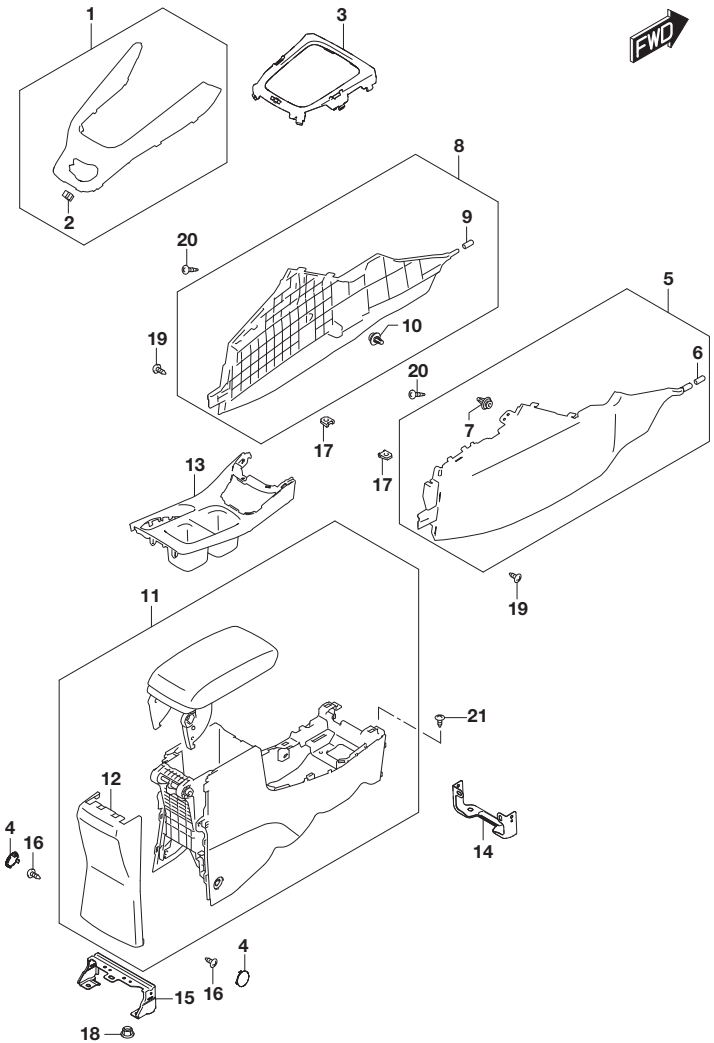

FIG.740D (3-J-13) CONSOLE BOX (4WD:W/CONSOLE ARMREST)

REF NO.	PART NO.	DESCRIPTION	Q'TY	REMARKS
1	75811-54P31-QMC	ORNAMENT, FLOOR CONSOLE FR (SILVER)	1	
2	09409-08342	.CLIP	4	
3	75822-61M10-5PK	GARNISH, GEAR SHIFT (BLACK)	1	6AT
4	75825-61M00-5PK	CAP, FLOOR CONSOLE RR (BLACK)	2	
5	75830-54P00-5PK	COVER, FLOOR CONSOLE FR RH (BLACK)	1	
6	73132-57L00	.CAP, I/P PIN	1	
7	09409-10312	.CLIP	1	
8	75840-54P00-5PK	COVER, FLOOR CONSOLE FR LH (BLACK)	1	
9	73132-57L00	.CAP, I/P PIN	1	
10	09409-10312	.CLIP	1	
11-1	75850-61M00-5PK	BOX, FL CSL RR (BLACK)	1	K10C,K14C
11-2	75850-74S00-5PK	BOX, FL CSL RR (BLACK)	1	K14D
12	75852-61M00-5PK	.COVER, FLOOR CONSOLE RR (BLACK)	1	
13	75860-54P00-5PK	PANEL, FLOOR CONSOLE RR (BLACK)	1	
14	75871-61M00	BRACKET, FL CSL BOX FR	1	
15	75872-61M00	BRACKET, FL CSL BOX RR	1	
16	09125-05140	SCREW (5X16)	2	
17	09148-05045	NUT	2	
18	09159-06076	NUT	2	
19	03141-0512A	SCREW	2	
20	03541-0516A	SCREW	2	
21	03541-0516A	SCREW	2	

FIG.741A

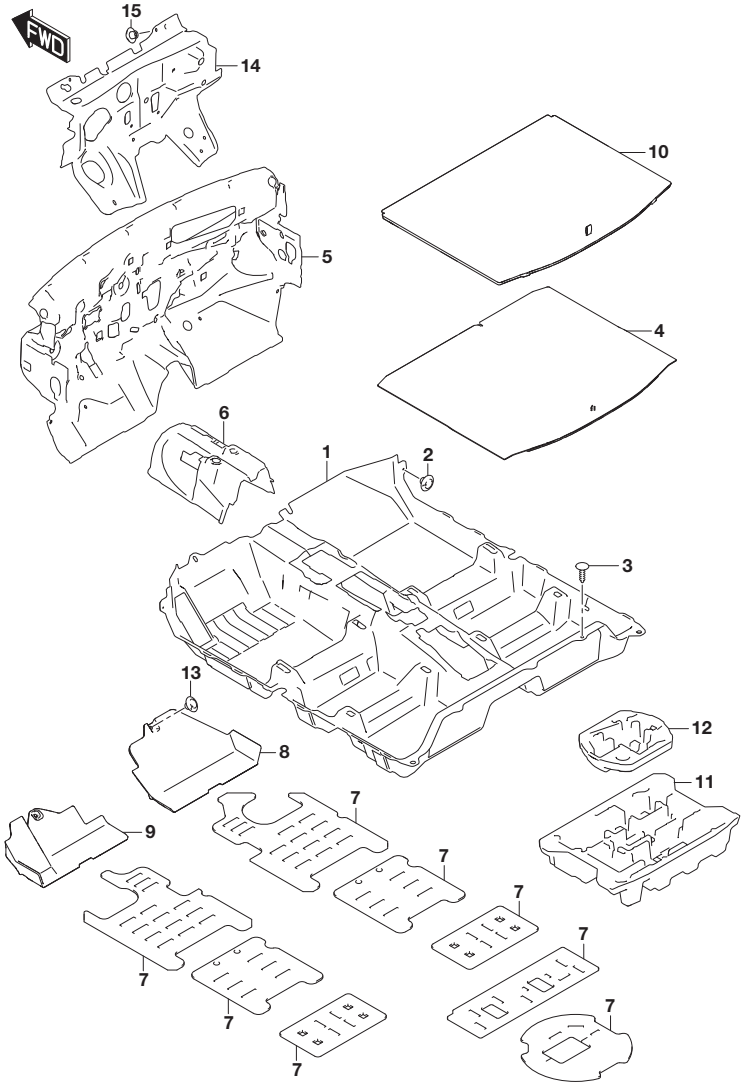

FIG.741A (3-J-14) FLOOR CARPET (LHD)

REF NO.	PART NO.	DESCRIPTION	Q'TY	REMARKS
1-1	75110-54P60-R3F	CARPET, FL (BLACK)	1	K10C,K14C
1-2	75110-74S60-R3F	CARPET, FL (BLACK)	1	K14D:N/REAR HEATER DUCT
1-3	75110-74S50-R3F	CARPET, FL (BLACK)	1	K14D:W/REAR HEATER DUCT
2	09148-05037	CLIP	2	
3	09409-10302-5PK	CLIP (BLACK)	3	
4	75130-54P00-R3F	CARPET, LUGGAGE FLOOR (BLACK)	1	
5	75221-54P20	SILENCER, DASH PNL INR	1	
6	75231-61M11	SILENCER, TUNNEL INR	1	
7	99611-60A01	SHEET, SILENCER (800X1000X3)	AR	CUT AS REQUIRED
8	75411-61M10	PAD, DASH LOWER RH	1	
9	75412-61M10	PAD, DASH LOWER LH	1	
10	75460-54P00-GMY	BOARD, LUGGAGE FLOOR (BLACK)	1	W/LUGGAGE BOARD
11-1	75491-61M00	BOX, TOOL	1	(K10C,K14C):N/SPARE TIRE
11-2	75491-61M00	BOX, TOOL	1	K14D:N/SPARE TIRE: N/LUGGAGE BOARD
11-3	75491-74S00	BOX, TOOL	1	K14D:N/SPARE TIRE: W/LUGGAGE BOARD
12	75481-61M00	BOX, TOOL	1	W/SPARE TIRE
13	09148-05037	CLIP	2	
14	72450-61M10	SILENCER, DASH OUTER	1	
15	09148-05037	CLIP	4	

APK414-3 P22 741A
FLOOR CARPET (1)

FIG.741B

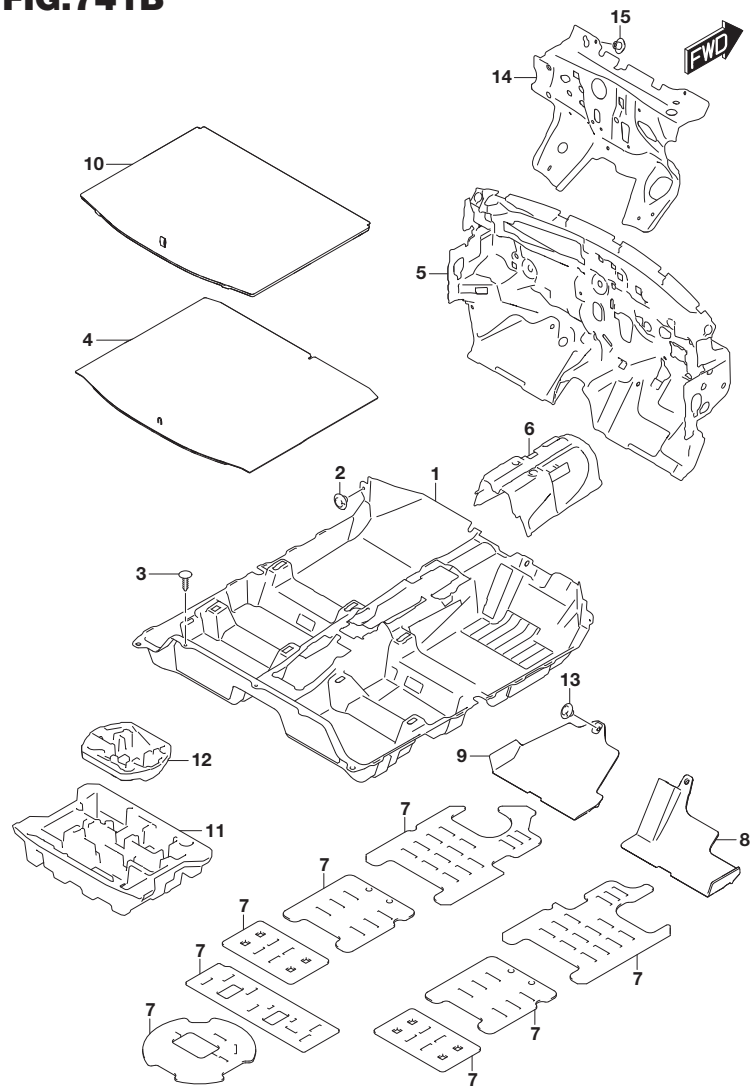

FIG.741B (3-K-2) FLOOR CARPET (RHD)

REF NO.	PART NO.	DESCRIPTION	Q'TY	REMARKS
1-1	75110-54P10-R3F	CARPET, FL (BLACK)	1	K14C
1-2	75110-74S10-R3F	CARPET, FL (BLACK)	1	K14D
2	09148-05037	CLIP	2	
3	09409-10302-5PK	CLIP (BLACK)	3	
4	75130-54P00-R3F	CARPET, LUGGAGE FLOOR (BLACK)	1	
5	75221-54P00	SILENCER, DASH PNL INR	1	
6	75231-61M11	SILENCER, TUNNEL INR	1	
7	99611-60A01	SHEET, SILENCER (800X1000X3)	AR	CUT AS REQUIRED
8	75411-61M20	PAD, DASH LOWER RH	1	
9	75412-61M00	PAD, DASH LOWER LH	1	
10	75460-54P00-GMY	BOARD, LUGGAGE FLOOR (BLACK)	1	W/LUGGAGE BOARD
11-1	75491-61M00	BOX, TOOL	1	(K10C,K14C):N/SPARE TIRE
11-2	75491-61M00	BOX, TOOL	1	K14D:N/SPARE TIRE: N/LUGGAGE BOARD
11-3	75491-74S00	BOX, TOOL	1	K14D:N/SPARE TIRE: W/LUGGAGE BOARD
12	75481-61M00	BOX, TOOL	1	W/SPARE TIRE
13	09148-05037	CLIP	1	
14	72450-61M00	SILENCER, DASH OUTER	1	
15	09148-05037	CLIP	3	

FIG.745A

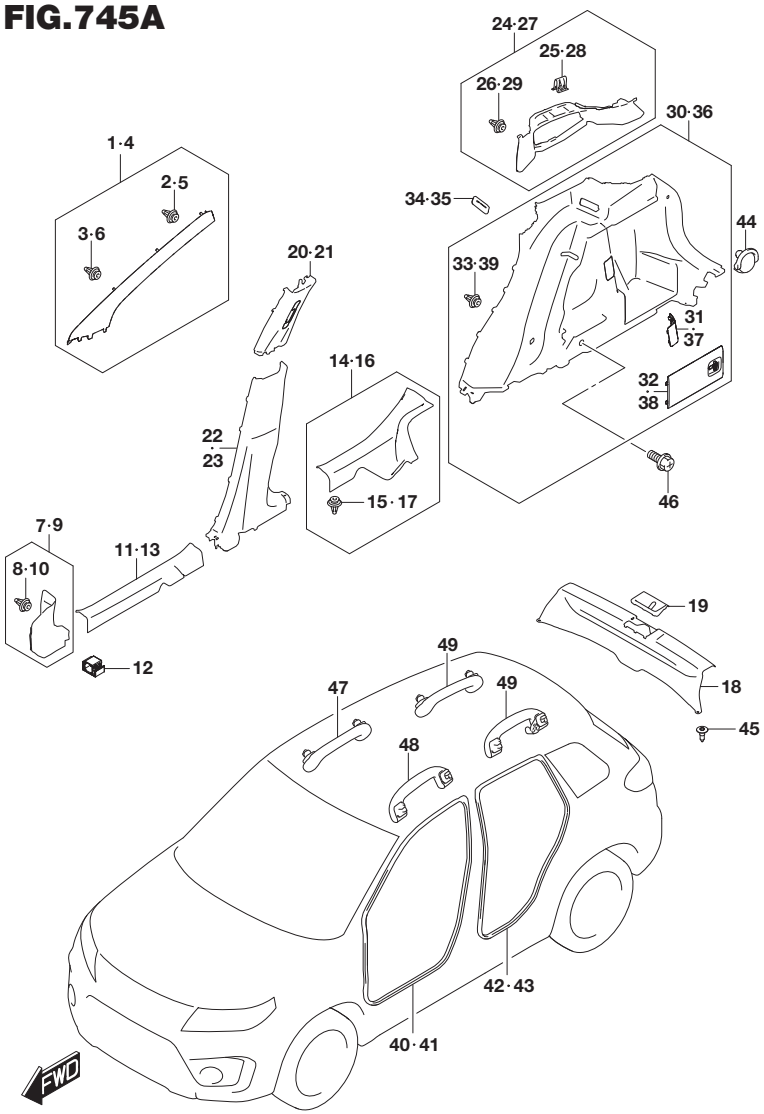

FIG.745A (3-K-3) INTERIOR TRIM

REF NO.	PART NO.	DESCRIPTION	Q'TY	REMARKS
1	76110-54P00-6GS	TRIM, FR PILLAR RH (GRAY)	1	
2	09409-10312	.CLIP	1	
3	09409-10313	.CLIP	1	
4	76120-54P00-6GS	TRIM, FR PILLAR LH (GRAY)	1	
5	09409-10312	.CLIP	1	
6	09409-10313	.CLIP	1	
7	76130-61M00-5PK	TRIM, DASH SIDE RH (BLACK)	1	
8	09409-10312	.CLIP	1	
9	76140-61M00-5PK	TRIM, DASH SIDE LH (BLACK)	1	
10	09409-10312	.CLIP	1	
11	76151-61M00-5PK	SCUFF, SIDE SILL FR RH (BLACK)	1	
12	76158-68L00	CLAMP, SIDE SILL SCUFF	12	
13	76161-61M00-5PK	SCUFF, SIDE SILL FR LH (BLACK)	1	
14	76170-54P00-5PK	SCUFF, SIDE SILL REAR RH (BLACK)	1	
15	09409-10312	.CLIP	1	
16	76180-54P00-5PK	SCUFF, SIDE SILL REAR LH (BLACK)	1	
17	09409-10312	.CLIP	1	
18	76191-54P01-5PK	TRIM, TAIL END (BLACK)	1	
19	76192-54P00-5PK	CAP, TAIL END TRIM (BLACK)	1	
20	76210-54P10-6GS	TRIM, CTR PILLAR UPR RH (GRAY)	1	
21	76220-54P10-6GS	TRIM, CTR PILLAR UPR LH (GRAY)	1	
22	76231-54P00-5PK	TRIM, CTR PILLAR LOWER RH (BLACK)	1	
23	76241-54P00-5PK	TRIM, CTR PILLAR LOWER LH (BLACK)	1	
24	76250-54P00-6GS	TRIM, QUARTER UPPER RH (GRAY)	1	
25	09409-07335	.CLIP	1	
26	09409-10312	.CLIP	4	
27	76260-54P00-6GS	TRIM, QUARTER UPPER LH (GRAY)	1	
28	09409-07335	.CLIP	1	
29	09409-10312	.CLIP	4	
30-1	76270-54P01-5PK	TRIM, QUARTER LOWER RH (BLACK)	1	N/LUGGAGE ROOM LAMP
30-2	76270-54P11-5PK	TRIM, QUARTER LOWER RH (BLACK)	1	W/LUGGAGE ROOM LAMP

FIG.745A

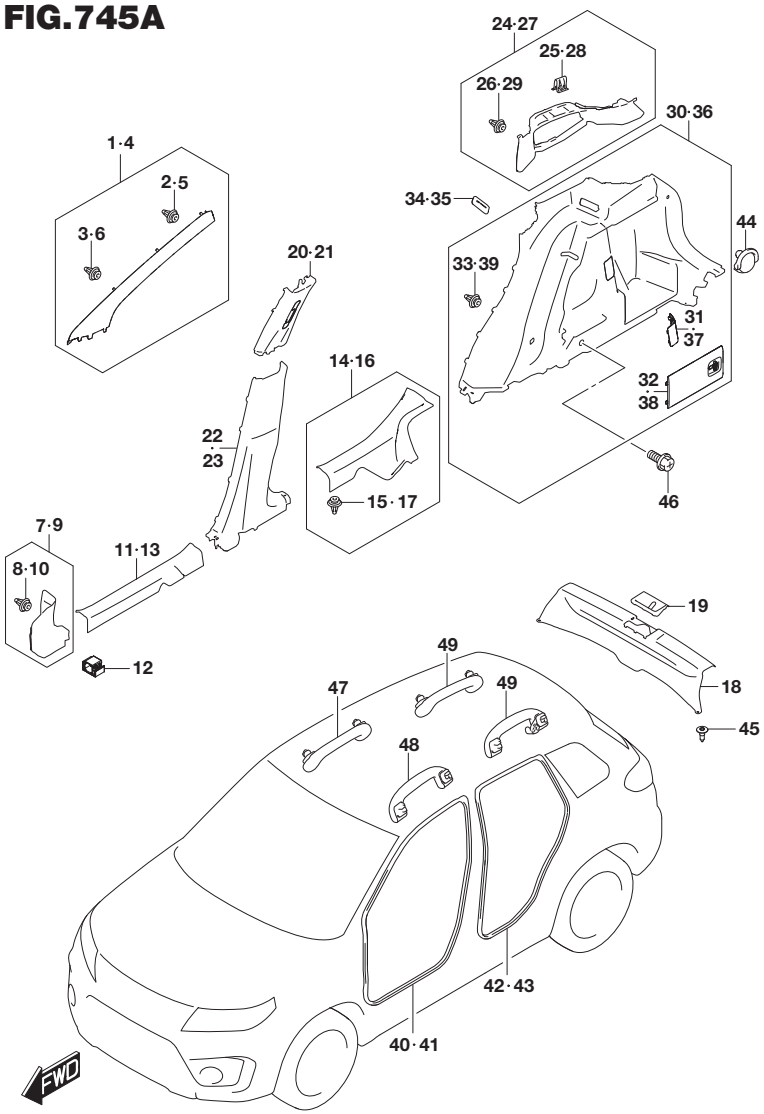

FIG.745A (3-K-4) INTERIOR TRIM

REF NO.	PART NO.	DESCRIPTION	Q'TY	REMARKS
31	76275-61M00-5PK	.CAP, QUARTER LOWER TRIM RH (BLACK)	1	
32	76310-61M00-5PK	.LID, QUARTER LOWER TRIM (BLACK)	1	
33	09409-10312	.CLIP	3	
34	76272-54P00-5PK	COVER, REAR SEAT BELT SIDE RH (BLACK)	1	
35	76273-54P00-5PK	COVER, REAR SEAT BELT SIDE LH (BLACK)	1	
36	76280-54P01-5PK	TRIM, QUARTER LOWER LH (BLACK)	1	
37	76276-61M00-5PK	.CAP, QUARTER LOWER TRIM LH (BLACK)	1	
38	76310-61M00-5PK	.LID, QUARTER LOWER TRIM (BLACK)	1	
39	09409-10312	.CLIP	3	
40	76291-54P00	TRIM, FR DR OPNG RH	1	
41	76292-54P00	TRIM, FR DR OPNG LH	1	
42	76295-54P00	TRIM, RR DR OPNG RH	1	
43	76296-54P00	TRIM, RR DR OPNG LH	1	
44	76721-57L00-5PK	HOOK, CARGO NET (BLACK)	2	
45	09409-07308-5PK	CLIP (6.5X20.5) (BLACK)	2	
46	02162-0612A	SCREW	4	
47	76410-61M00-6GS	GRIP, ASSISTANT FR (GRAY)	1	LHD
48	76410-61M00-6GS	GRIP, ASSISTANT FR (GRAY)	1	RHD
49	76410-61M10-6GS	GRIP, ASSISTANT REAR (GRAY)	2	

FIG.750A

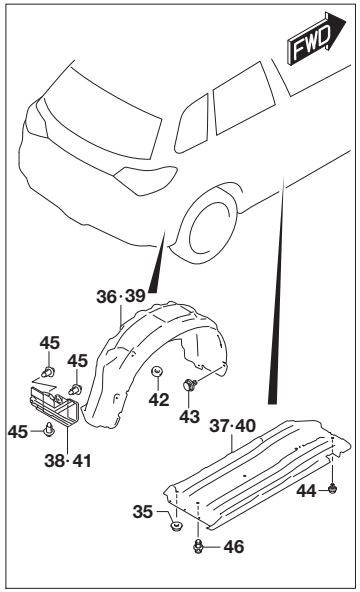

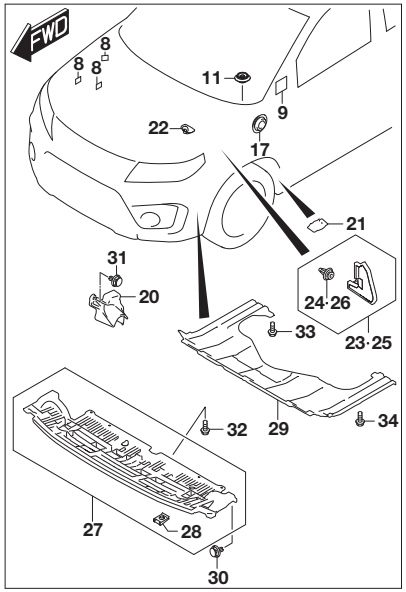

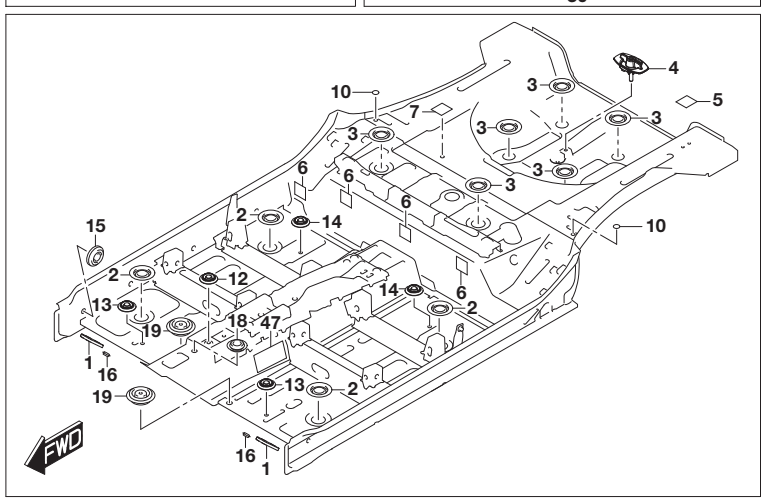

FIG.750A (3-K-5) COVER/CAP

REF NO.	PART NO.	DESCRIPTION	Q'TY	REMARKS
1	75420-86R00	CAP, DASH LOWER	2	
2	75431-73H01	CAP, FL DRAIN	4	
3	75431-73H01	CAP, FL DRAIN	6	
4	75450-68L00	HOLDER, SPARE TIRE	1	W/SPARE TIRE
5	77151-54P10	FILM, REAR FLOOR	8	
6	77151-54P00	SEAL, LUGGAGE HOOK	4	
7	77151-54P00	SEAL, LUGGAGE HOOK	1	
8	77151-54P00	SEAL, LUGGAGE HOOK	6	
9	77151-54P00	SEAL, LUGGAGE HOOK	2	
10	77151-54P10	FILM, REAR FLOOR	2	
11	09250-10023	CAP (OD:18)	2	
12	09250-15015	CAP (OD:23.5)	1	
13	09250-15015	CAP (OD:23.5)	2	FRONT
14	09250-15015	CAP (OD:23.5)	2	REAR
15	09250-20015	CAP (OD:28.5)	8	
16	09250-20015	CAP (OD:28.5)	2	
17	09250-20015	CAP (OD:28.5)	1	RHD
18	09250-20032	CAP (OD:28.5)	1	
19	09250-25007	CAP (OD:25)	2	
20	72323-61M00	COVER, SPLASH RH	1	
21	72353-54P00	COVER, FR FENDER LWR	2	
22	72355-61M00	COVER, COWL DRAIN	2	
23	72360-54P00	COVER, FR FENDER FR RH	1	
24	09409-10312	.CLIP	1	
25	72370-54P00	COVER, FR FENDER FR LH	1	
26	09409-10312	.CLIP	1	
27	72390-54P00	ABSORBER, FR BUMPER LWR	1	
28	09148-05047	.NUT	4	
29	72411-61M00	COVER, ENGINE UNDER	1	
30	09409-07340	CLIP (6.8X11.5)	2	
31	09409-07340	CLIP (6.8X11.5)	2	
32	01551-0616C	BOLT	3	
33	01551-0616C	BOLT	7	
34	03241-0516D	SCREW	6	
35	14357-72J00	NUT, HEAT INSULATOR	20	
36	72811-54P00	LINING, RR FENDER RH	1	

FIG.750A

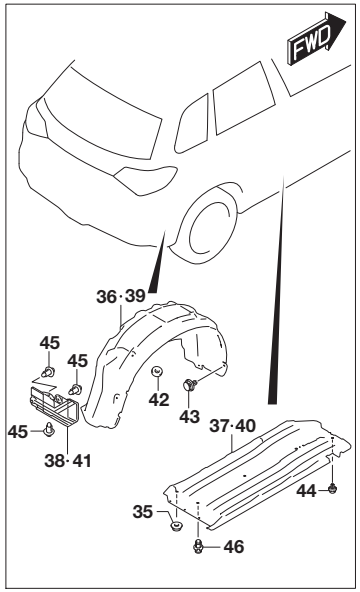

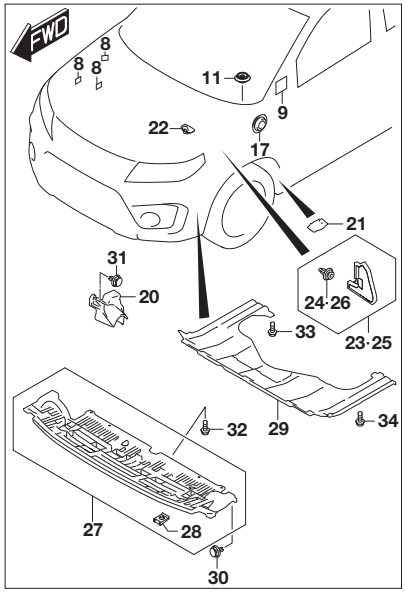

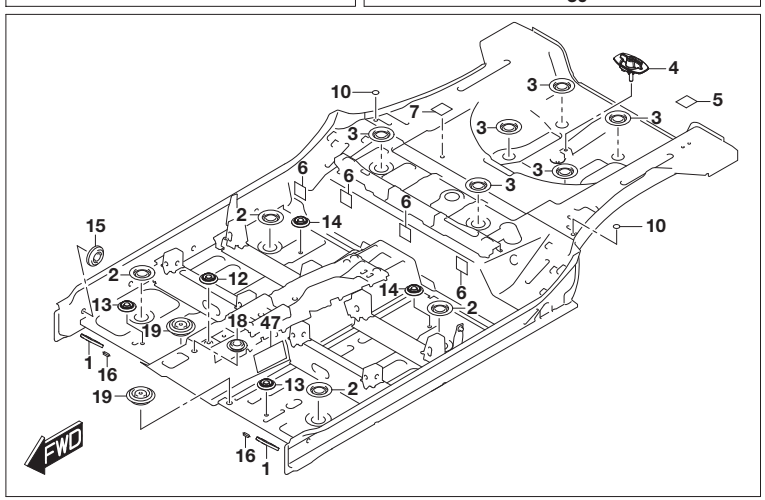

FIG.750A (3-K-6) COVER/CAP

REF NO.	PART NO.	DESCRIPTION	Q'TY	REMARKS
37	72813-61M00	COVER, MAIN FL UNDER RH	1	
38	72814-54P00	COVER, BACK PNL SIDE RH	1	
39	72821-54P00	LINING, RR FENDER LH	1	
40-1	72823-61M00	COVER, MAIN FL UNDER LH	1	K10C,K14C
40-2	72823-61M10	COVER, MAIN FL UNDER LH	1	K14D
41	72824-54P00	COVER, BACK PNL SIDE LH	1	
42	09148-05059	CLIP	8	
43	09409-07340	CLIP (6.8X11.5)	13	
44	09409-07340	CLIP (6.8X11.5)	2	
45	09409-08327	CLIP (7.8X20)	6	
46	09409-15302	CLIP	6	
47	83971-54F00	SHEET (185X75X1.8)	4	

FIG.755A

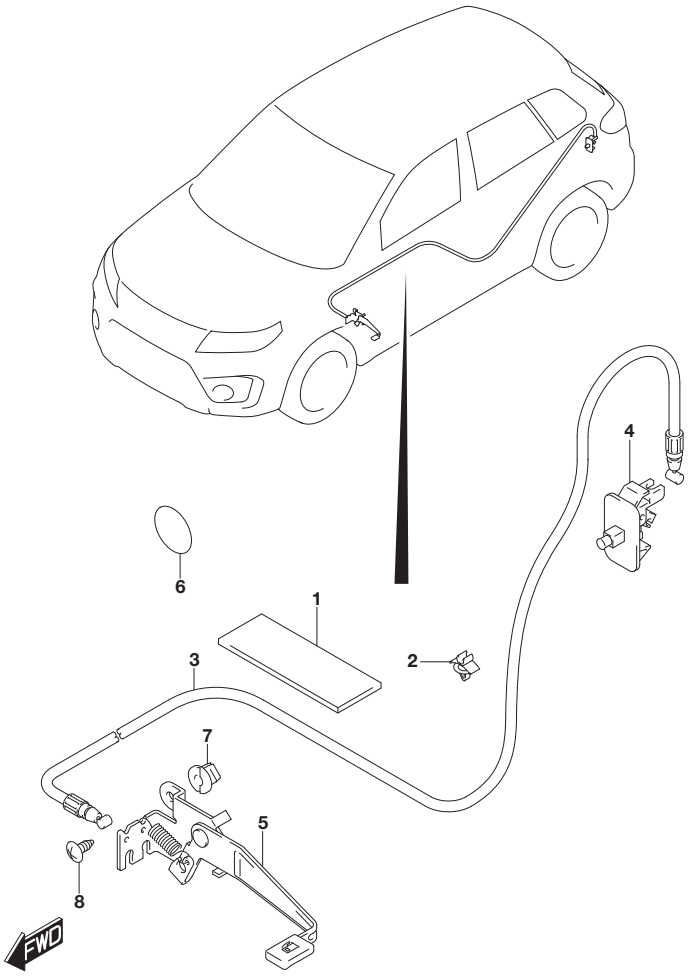

FIG.755A (3-K-7) FUEL LID OPENER (LHD)

REF NO.	PART NO.	DESCRIPTION	Q'TY	REMARKS
1	36930-82010	COVER, HARNESS	2	
2	75411-76G00	CLAMP, CABLE	1	
3	76430-54P10	CABLE, FUEL LID OPENER	1	
4	76520-72M00	OPENER, FUEL LID	1	
5	83310-76G32	LEVER, FUEL LID OPENER	1	
6	77151-54P10	FILM, REAR FLOOR	3	
7	09148-06007	NUT	1	
8	03241-0612A	SCREW	1	

FIG.755B

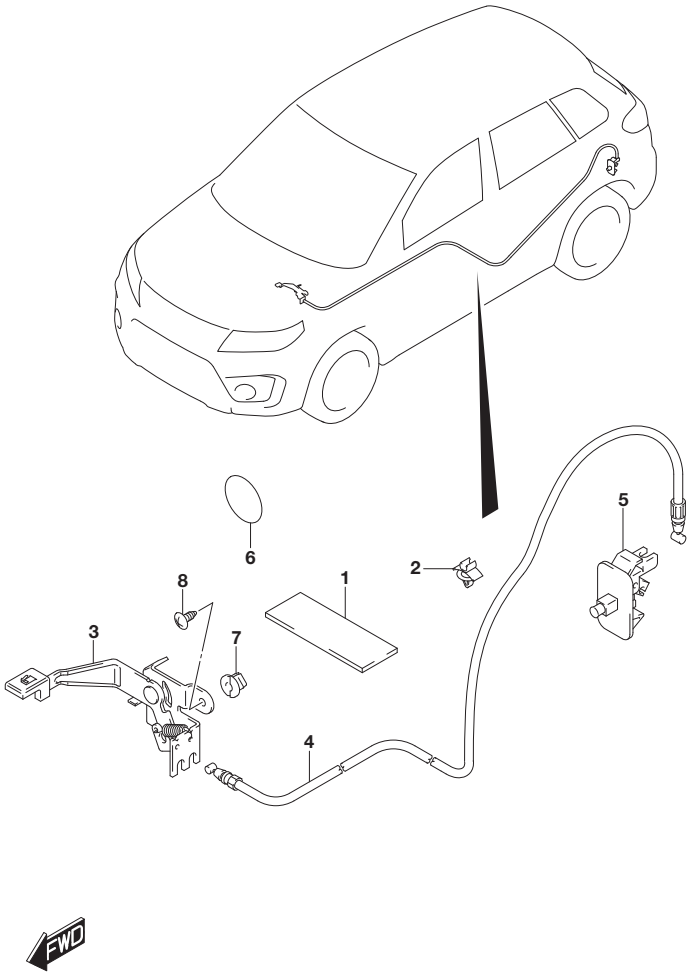

FIG.755B (3-K-8) FUEL LID OPENER (RHD)

REF NO.	PART NO.	DESCRIPTION	Q'TY	REMARKS
1	36930-82010	COVER, HARNESS	2	
2	75411-76G00	CLAMP, CABLE	3	
3	76420-63J01	LEVER, FUEL LID OPENER	1	
4	76430-54P00	CABLE, FUEL LID OPENER	1	
5	76520-72M00	OPENER, FUEL LID	1	
6	77151-54P10	FILM, REAR FLOOR	1	
7	09148-06007	NUT	1	
8	03241-0612A	SCREW	1	

APK414-3 P22 755B
FUEL LID OPENER (2)

FIG.758A

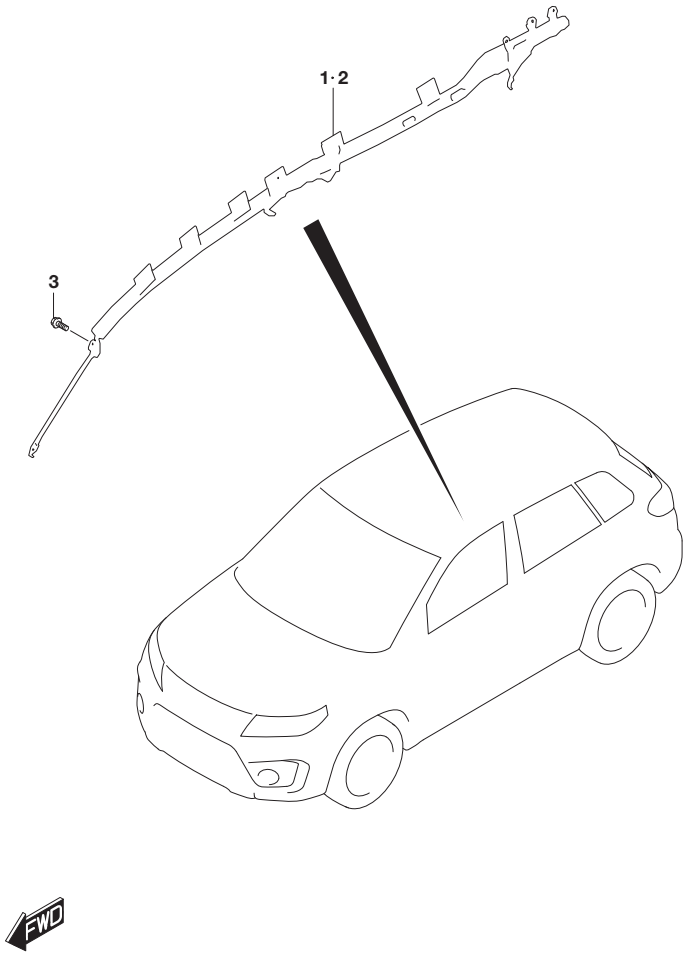

FIG.758A (3-K-9) ROOF SIDE AIR BAG

REF NO.	PART NO.	DESCRIPTION	Q'TY	REMARKS
1	76480-54P00	MODULE ASSY, ROOF SIDE AIRBAG RH	1	SEE NOTE
2	76490-54P00	MODULE ASSY, ROOF SIDE AIRBAG LH	1	SEE NOTE
3	09103-06283	BOLT (6X16)	22	

NOTE : SPECIAL PROCEDURES ARE REQUIRED FOR SERVICING OR REPLACING AN AIR BAG. FOR THAT REASON, ONLY A FACTORY-AUTHORIZED DEALER, WHO IS SPECIALLY TRAINED, SHOULD BE ALLOWED TO SERVICE OR REPLACE YOUR AIR BAGS.

APK414-3 P22 758A
ROOF SIDE AIR BAG

FIG.760A

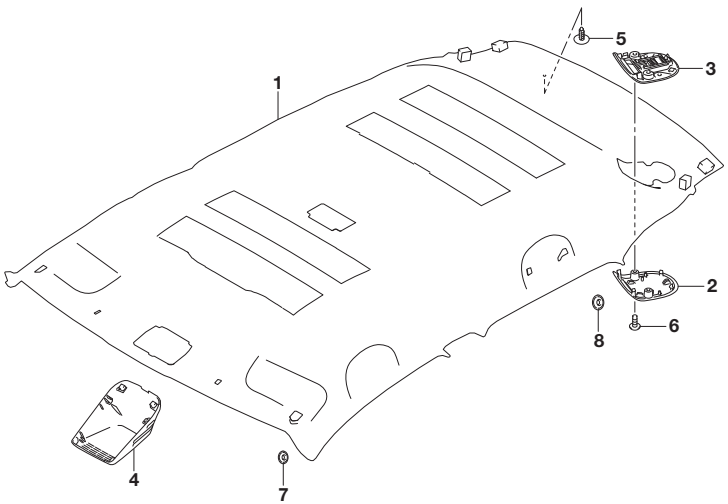

FIG.760A (3-K-10) ROOF LINING (N/SUNROOF)

REF NO.	PART NO.	DESCRIPTION	Q'TY	REMARKS
1-1	78100-54P00-6GS	LINING, ROOF (GRAY)	1	N/AEB CAMERA:LHD
1-2	78100-54P10-6GS	LINING, ROOF (GRAY)	1	N/AEB CAMERA:RHD
1-3	78100-86R00-6GS	LINING, ROOF (GRAY)	1	W/AEB MONAURAL CAMERA:LHD
1-4	78100-86R10-6GS	LINING, ROOF (GRAY)	1	W/AEB MONAURAL CAMERA:RHD
2	78121-51K00-6GS	COVER, RR CTR SEAT BELT (GRAY)	1	
3	78122-51K00-6GS	HOLDER, RR CTR SEAT BELT (GRAY)	1	
4	78190-86R00-5PK	COVER, AUTO BRAKE CONT (BLACK)	1	W/AEB MONAURAL CAMERA
5	09409-06326-6GS	CLIP (GRAY)	2	
6	02142-0512A	SCREW	2	
7	09250-20015	CAP (OD:28.5)	2	
8	09250-20015	CAP (OD:28.5)	2	

FIG.760B

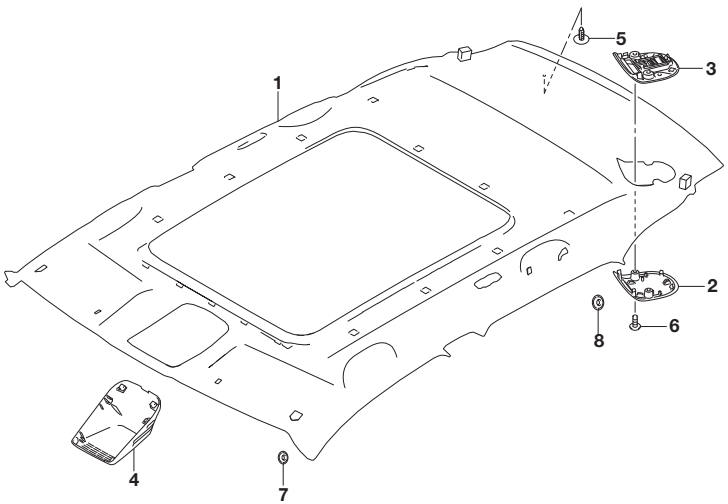

FIG.760B (3-K-11) ROOF LINING (W/SUNROOF)

REF NO.	PART NO.	DESCRIPTION	Q'TY	REMARKS
1-1	78110-86R40-6GS	LINING, ROOF (GRAY)	1	LHD
1-2	78110-86R50-6GS	LINING, ROOF (GRAY)	1	RHD
2	78121-51K00-6GS	COVER, RR CTR SEAT BELT (GRAY)	1	
3	78122-51K00-6GS	HOLDER, RR CTR SEAT BELT (GRAY)	1	
4	78190-86R00-5PK	COVER, AUTO BRAKE CONT (BLACK)	1	
5	09409-06326-6GS	CLIP (GRAY)	2	
6	02142-0512A	SCREW	2	
7	09250-20015	CAP (OD:28.5)	2	
8	09250-20015	CAP (OD:28.5)	2	

FIG.772A

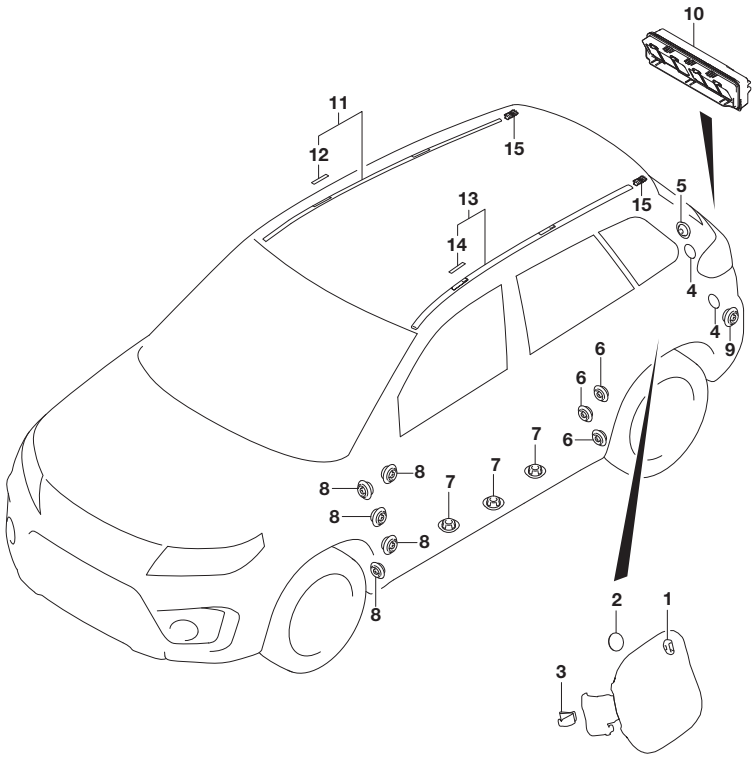

FIG.772A (3-K-12) MOLDING (N/ROOF RAIL)

REF NO.	PART NO.	DESCRIPTION	Q'TY	REMARKS
1	77116-60B00	CUSHION, FUEL LID	2	
2	77117-54P00	FILM, FUEL LID CUSHION	2	
3	77121-63J00	SPRING, FUEL FILLER DOOR	1	
4	77191-76F00	FILM	4	
5	09250-10023	CAP (OD:18)	2	
6	09250-15012	CAP (OD:23.5)	6	
7	09250-17001	CAP (OD:25.5)	6	
8	09250-17001	CAP (OD:25.5)	10	
9	09250-17001	CAP (OD:25.5)	2	
10	77330-61M00	OUTLET, VENTILATOR	2	
11	78130-54P01	MOLDING, ROOF RH	1	
12	78132-61M00	.CAP, ROOF MOLDING	2	
13	78140-54P01	MOLDING, ROOF LH	1	
14	78132-61M00	.CAP, ROOF MOLDING	2	
15	78150-57L10	CLIP, ROOF MOLDING	12	

FIG.772B

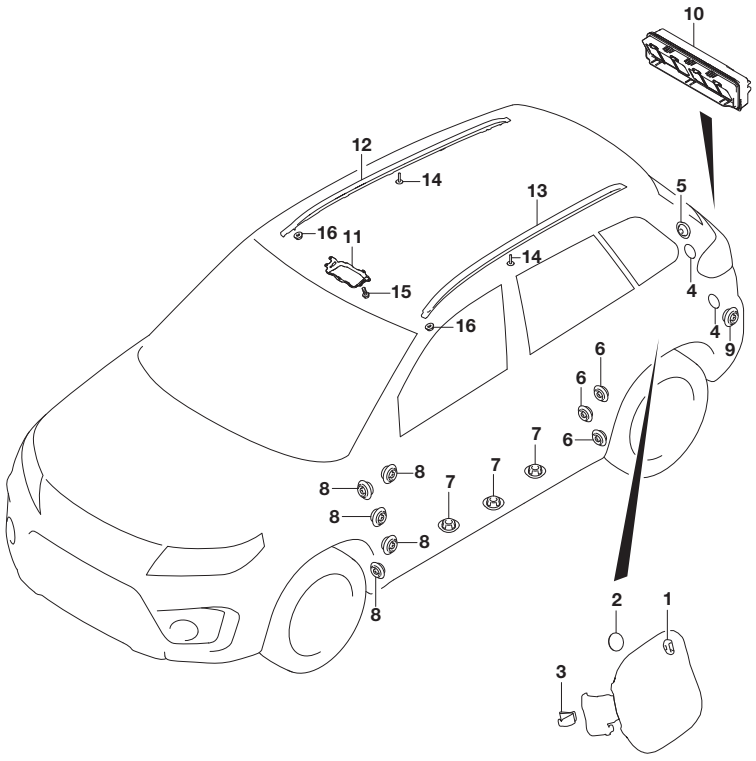

FIG.772B (3-K-13) MOLDING (W/ROOF RAIL)

REF NO.	PART NO.	DESCRIPTION	Q'TY	REMARKS
1	77116-60B00	CUSHION, FUEL LID	2	
2	77117-54P00	FILM, FUEL LID CUSHION	2	
3	77121-63J00	SPRING, FUEL FILLER DOOR	1	
4	77191-76F00	FILM	4	
5	09250-10023	CAP (OD:18)	2	
6	09250-15012	CAP (OD:23.5)	6	
7	09250-17001	CAP (OD:25.5)	6	
8	09250-17001	CAP (OD:25.5)	10	
9	09250-17001	CAP (OD:25.5)	2	
10	77330-61M00	OUTLET, VENTILATOR	2	
11	78161-61M00	BRACKET, ROOM LAMP FRONT	1	W/SUNROOF
12-1	78210-54P00-0CB	RAIL, ROOF RH (BLACK)	1	
12-2	78210-54P10-PNG	RAIL, ROOF RH (SILVER)	1	
13-1	78220-54P00-0CB	RAIL, ROOF LH (BLACK)	1	
13-2	78220-54P10-PNG	RAIL, ROOF LH (SILVER)	1	
14	09116-06241	BOLT (6X39)	8	
15	01550-0612A	BOLT	4	W/SUNROOF
16	08361-2506A	NUT	2	

FIG.774A

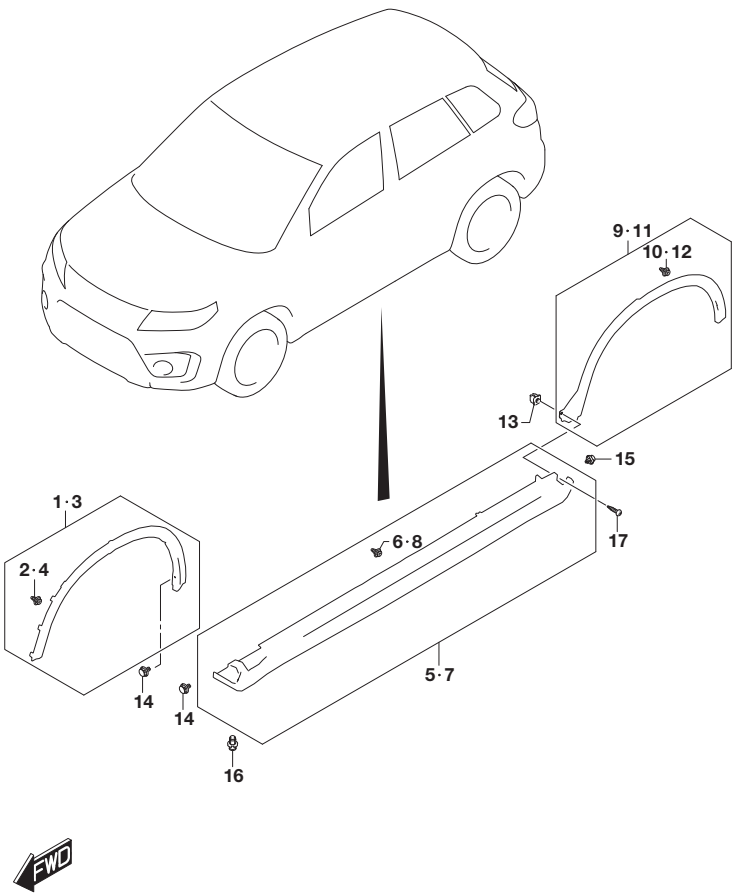

FIG.774A (3-K-14) SPLASH GUARD

REF NO.	PART NO.	DESCRIPTION	Q'TY	REMARKS
1	77210-54P00-5PK	GUARD ASSY, FR FENDER SPLASH RH (BLACK)	1	
2	09409-10312	.CLIP	8	
3	77220-54P00-5PK	GUARD ASSY, FR FENDER SPLASH LH (BLACK)	1	
4	09409-10312	.CLIP	8	
5	77230-54P10-5PK	GUARD ASSY, SIDE SILL SPLASH RH (BLACK)	1	
6	09409-10318	.CLIP	6	
7	77240-54P10-5PK	GUARD ASSY, SIDE SILL SPLASH LH (BLACK)	1	
8	09409-10318	.CLIP	6	
9	77250-54P00-5PK	GUARD ASSY, RR FENDER SPLASH RH (BLACK)	1	
10	09409-10318	.CLIP	7	
11	77260-54P00-5PK	GUARD ASSY, RR FENDER SPLASH LH (BLACK)	1	
12	09409-10318	.CLIP	7	
13	09148-05044	NUT	4	
14	09409-07340	CLIP (6.8X11.5)	14	
15	09409-07340	CLIP (6.8X11.5)	2	
16	09409-15302	CLIP	12	
17	03511-0512C	SCREW	4	

FIG.777A

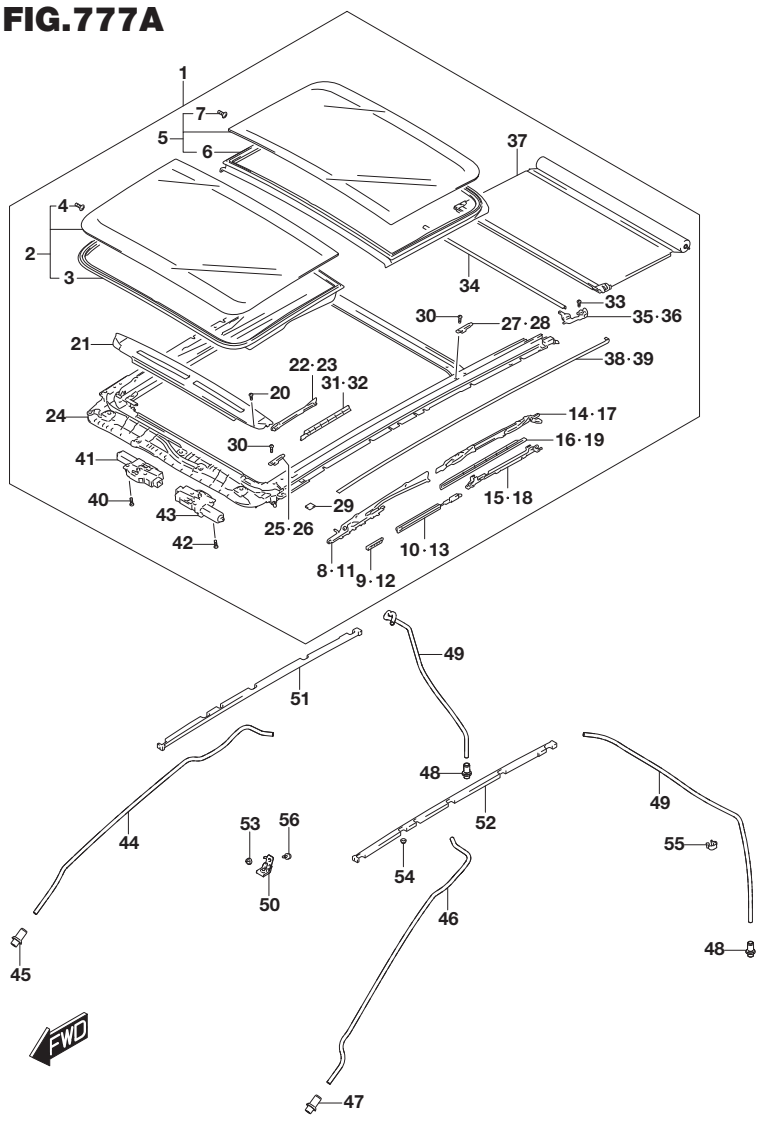

FIG.777A (3-L-2) SLIDING ROOF (W/SUNROOF)

REF NO.	PART NO.	DESCRIPTION	Q'TY	REMARKS
1	78700-54P01-PLT	ROOF ASSY, PANORAMIC SLIDING (GRAY)	1	
2	78710-61M01	.GLASS ASSY, SLIDING ROOF FR	1	
3	78712-61M00	..WEATHERSTRIP, FR GLASS	1	
4	78713-61M00	..BOLT, SLIDING ROOF GLASS	4	
5	78720-61M00	.GLASS ASSY, SLIDING ROOF RR	1	
6	78722-61M00	..WEATHERSTRIP, RR GLASS	1	
7	78713-61M00	..BOLT, SLIDING ROOF GLASS	4	
8	78731-61M00	.GUIDE ASSY, FR GLASS RH	1	
9	78732-61M00	.CABLE ASSY, GLASS RH	1	
10	78733-61M00	.SHUTTER, FR GUIDE RH	1	
11	78741-61M00	.GUIDE ASSY, FR GLASS LH	1	
12	78742-61M00	.CABLE ASSY, GLASS LH	1	
13	78743-61M00	.SHUTTER, FR GUIDE LH	1	
14	78751-61M00	.GUIDE, RR GLASS RH	1	
15	78752-61M00	.SLIDER, RR GUIDE RH	1	
16	78753-61M00	.SCREEN, RR GUIDE RH	1	
17	78761-61M00	.GUIDE, RR GLASS LH	1	
18	78762-61M00	.SLIDER, RR GUIDE LH	1	
19	78763-61M00	.SCREEN, RR GUIDE LH	1	
20	78733-68L00	.TAPPING SCREW	2	
21	78771-54P00	.DEFLECTOR, SLIDING ROOF	1	
22	78772-61M00	.LINK, DEFLECTOR ASSY RH	1	
23	78773-61M00	.LINK, DEFLECTOR ASSY LH	1	
24	78781-61M00	.FRAME, PANORAMIC SLIDING	1	
25	78782-61M00	.SET PLATE, FRAME FR RH	1	
26	78783-61M00	.SET PLATE, FRAME FR LH	1	
27	78784-61M00	.SET PLATE, FRAME RR RH	1	
28	78785-61M00	.SET PLATE, FRAME RR LH	1	
29	78786-61M00	.FASTENER	10	
30	78787-61M00	.TAPPING SCREW	4	
31	78774-61M00	.LINK, CONNECTOR RH	1	
32	78775-61M00	.LINK, CONNECTOR LH	1	
33	78787-61M00	.TAPPING SCREW	2	
34	78791-61M00	.STAY, ROLL SHADE	1	
35	78792-61M00	.BASE, ROLL SHADE RH	1	

FIG.777A

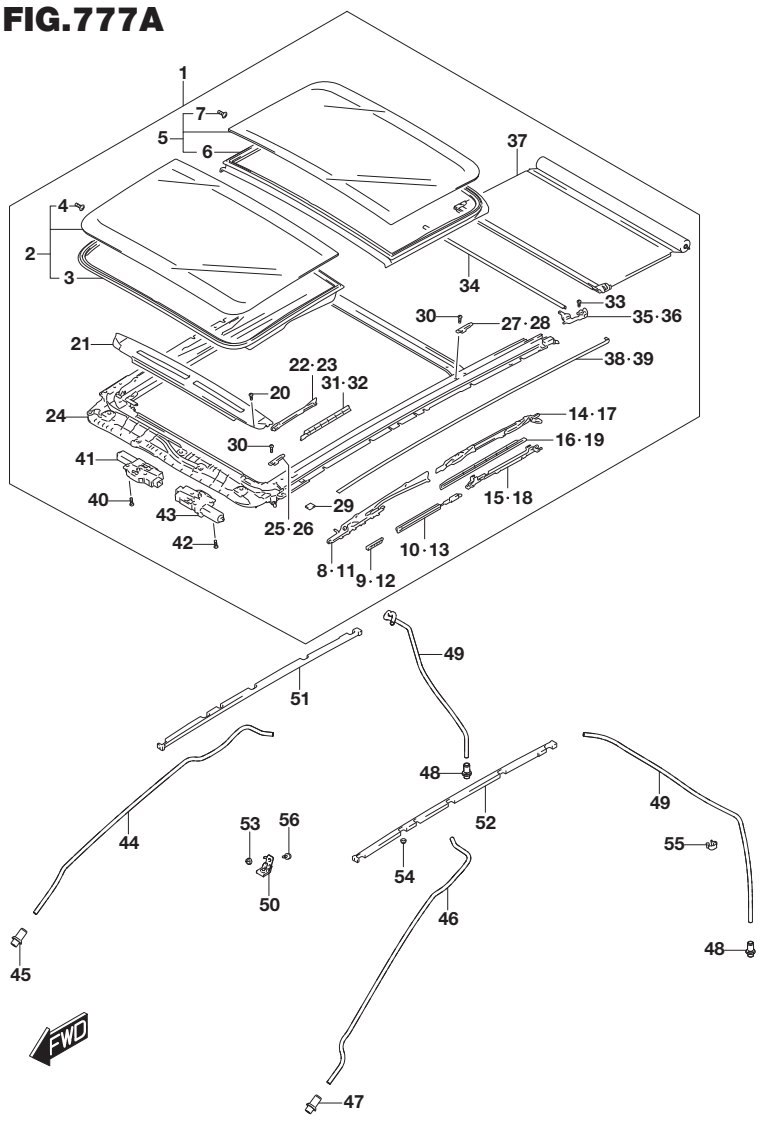

FIG.777A (3-L-3) SLIDING ROOF (W/SUNROOF)

REF NO.	PART NO.	DESCRIPTION	Q'TY	REMARKS
36	78793-61M00	.BASE ASSY, ROLL SHADE LH	1	
37	78794-61M01-PLT	.SHADE ASSY, ROLL (GRAY)	1	
38	78795-61M00	.CABLE ASSY, ROLL SHADE RH	1	
39	78796-61M00	.CABLE ASSY, ROLL SHADE LH	1	
40	78736-68L00	.SCREW	2	
41	78811-54P00	.MOTOR ASSY, GLASS	1	
42	78736-68L00	.SCREW	2	
43	78821-54P00	.MOTOR ASSY, SHADE	1	
44	78831-68L00	HOSE, FR DRAIN RH	1	
45	78841-57L01	CONNECTOR, DRAIN HOSE	1	
46	78832-68L00	HOSE, FR DRAIN LH	1	
47	78841-57L01	CONNECTOR, DRAIN HOSE	1	
48	78841-61M00	CONNECTOR, DRAIN HOSE	2	
49	78851-61M01	HOSE, REAR DRAIN	2	
50	78861-61M00	BRACKET, OVER HEAD CONSOLE	1	
51	78871-61M00	SEAL, PANORAMIC SLIDING ROOF RH	1	
52	78872-61M00	SEAL, PANORAMIC SLIDING ROOF LH	1	
53	09148-06007	NUT	1	
54	09159-06076	NUT	15	
55	09403-13309	CLAMP	6	
56	03241-0612A	SCREW	1	

APK414-3 P22 777A
SLIDING ROOF

FIG.780A

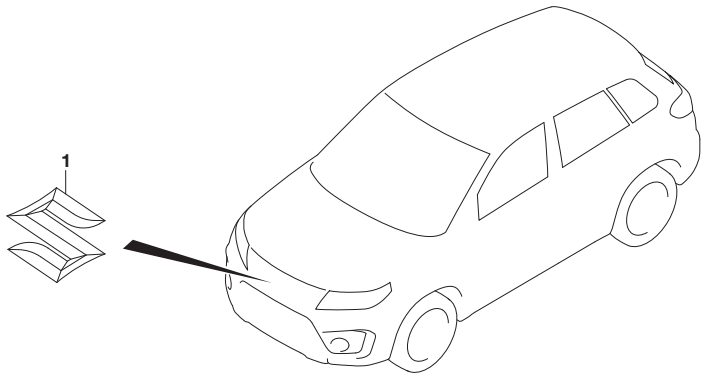

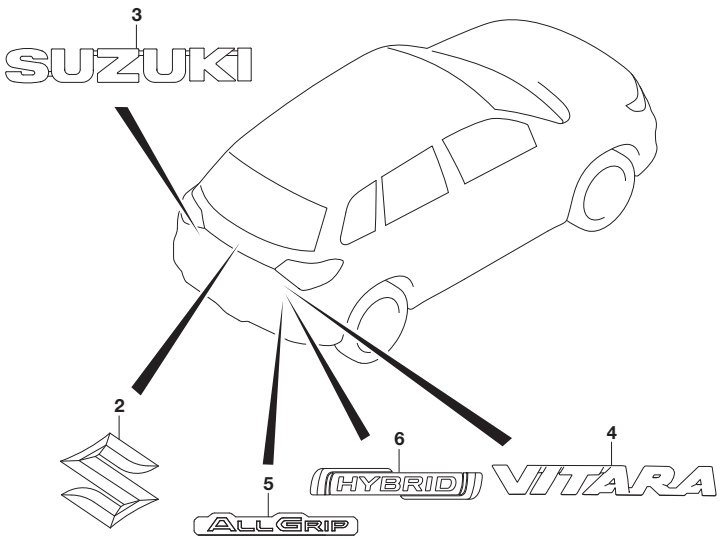

FIG.780A (3-L-4) EMBLEM

REF NO.	PART NO.	DESCRIPTION	Q'TY	REMARKS
1	77811-65J00-0PG	EMBLEM, MARK S (CHROME)	1	
2	77811-63J00-0PG	EMBLEM, MARK S (CHROME)	1	
3	77821-79J00-0PG	EMBLEM, SUZUKI (CHROME)	1	
4	77831-54P00-0PG	EMBLEM, VITARA (CHROME)	1	
5	77841-61M00-A93	EMBLEM, ALL GRIP (CHROME/GRAY)	1	4WD
6	77831-85P01-BVV	EMBLEM, REAR HYBRID (CHROME/BLUE)	1	W/EASS

APK414-3 P22 780A
EMBLEM

FIG.790A

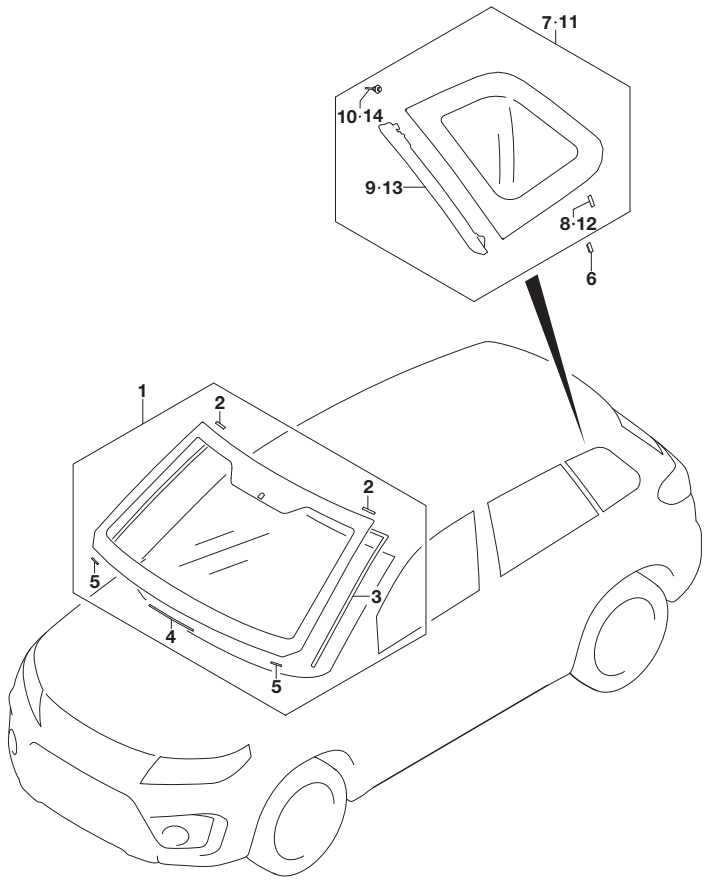

FIG.790A (3-L-5) WINDSHIELD (N/AEB CAMERA)

REF NO.	PART NO.	DESCRIPTION	Q'TY	REMARKS
1-1	84510-54P01	GLASS, WINDSHIELD	1	N/AUTO WIPER SYSTEM
1-2	84510-54P11	GLASS, WINDSHIELD	1	W/AUTO WIPER SYSTEM
2	84512-79M00	.FASTENER, GLASS UPPER	2	
3	84611-54P01	.MOLDING, WINDSHIELD	1	
4	84617-58J00	.SPACER, WINDSHIELD GLASS	1	
5	84617-76F00	.SPACER, WINDSHIELD GLASS	2	
6	84514-65D00	FEMALE, GLASS FASTENER NO.1	4	
7-1	84580-54P01	GLASS, QTR WINDOW RH	1	W/GREEN GLASS
7-2	84580-54P11	GLASS, QTR WINDOW RH	1	W/GRAY GLASS
8	84513-76F00	.MALE, GLASS FASTENER NO.2	2	
9	84582-54P00	.GARNISH, QTR WINDOW FR RH	1	
10	84584-73H00	.CLIP, QUARTER WINDOW FR	1	
11-1	84590-54P01	GLASS, QTR WINDOW LH	1	W/GREEN GLASS
11-2	84590-54P11	GLASS, QTR WINDOW LH	1	W/GRAY GLASS
12	84513-76F00	.MALE, GLASS FASTENER NO.2	2	
13	84592-54P00	.GARNISH, QTR WINDOW FR LH	1	
14	84584-73H00	.CLIP, QUARTER WINDOW FR	1	

FIG.790B

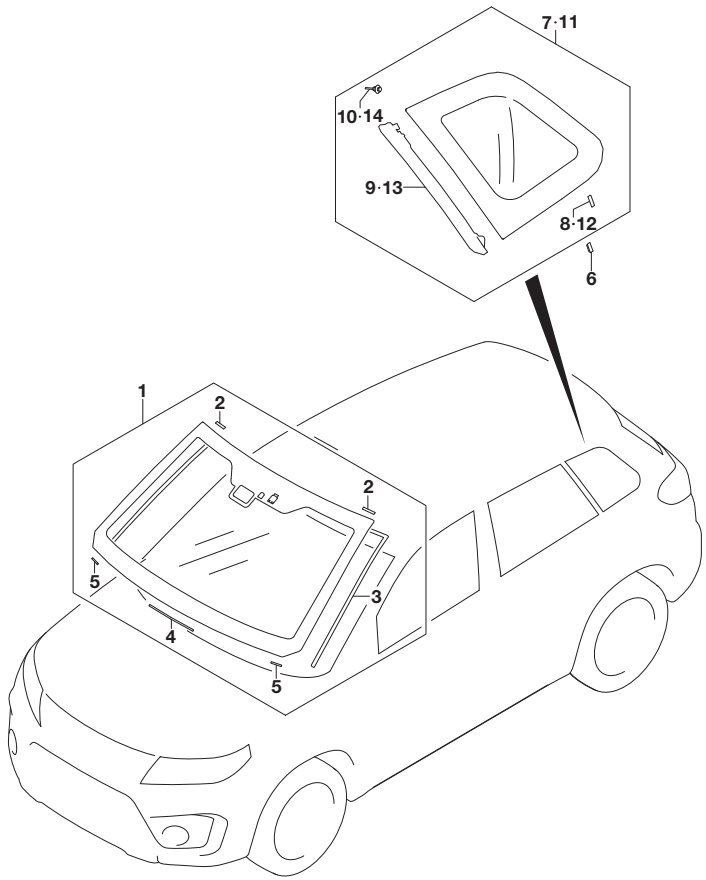

FIG.790B (3-L-6) WINDSHIELD (W/AEB MONAURAL CAMERA:LHD)

REF NO.	PART NO.	DESCRIPTION	Q'TY	REMARKS
1-1	84510-86R20	GLASS, WINDSHIELD	1	N/AUTO WIPER SYSTEM
1-2	84510-86R30	GLASS, WINDSHIELD	1	W/AUTO WIPER SYSTEM
2	84512-79M00	.FASTENER, GLASS UPPER	2	
3	84611-54P01	.MOLDING, WINDSHIELD	1	
4	84617-58J00	.SPACER, WINDSHIELD GLASS	1	
5	84617-76F00	.SPACER, WINDSHIELD GLASS	2	
6	84514-65D00	FEMALE, GLASS FASTENER NO.1	4	
7-1	84580-54P01	GLASS, QTR WINDOW RH	1	W/GREEN GLASS
7-2	84580-54P11	GLASS, QTR WINDOW RH	1	W/GRAY GLASS
8	84513-76F00	.MALE, GLASS FASTENER NO.2	2	
9	84582-54P00	.GARNISH, QTR WINDOW FR RH	1	
10	84584-73H00	.CLIP, QUARTER WINDOW FR	1	
11-1	84590-54P01	GLASS, QTR WINDOW LH	1	W/GREEN GLASS
11-2	84590-54P11	GLASS, QTR WINDOW LH	1	W/GRAY GLASS
12	84513-76F00	.MALE, GLASS FASTENER NO.2	2	
13	84584-73H00	.CLIP, QUARTER WINDOW FR	1	
14	84592-54P00	.GARNISH, QTR WINDOW FR LH	1	

FIG.790C

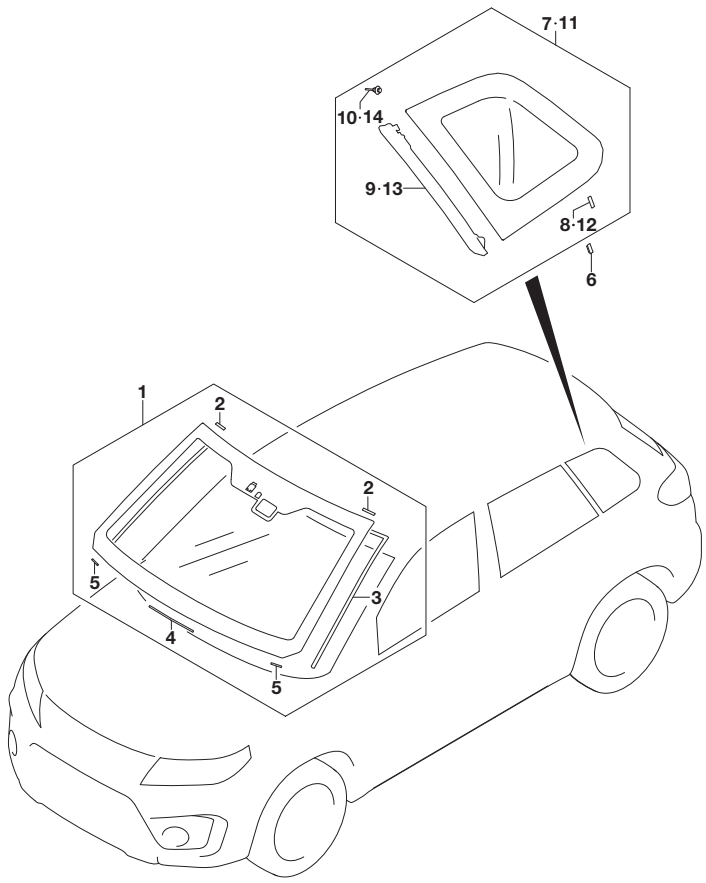

FIG.790C (3-L-7) WINDSHIELD (W/AEB MONAURAL CAMERA:RHD)

REF NO.	PART NO.	DESCRIPTION	Q'TY	REMARKS
1-1	84510-86R00	GLASS, WINDSHIELD	1	N/AUTO WIPER SYSTEM
1-2	84510-86R10	GLASS, WINDSHIELD	1	W/AUTO WIPER SYSTEM
2	84512-79M00	.FASTENER, GLASS UPPER	2	
3	84611-54P01	.MOLDING, WINDSHIELD	1	
4	84617-58J00	.SPACER, WINDSHIELD GLASS	1	
5	84617-76F00	.SPACER, WINDSHIELD GLASS	2	
6	84514-65D00	FEMALE, GLASS FASTENER NO.1	4	
7-1	84580-54P01	GLASS, QTR WINDOW RH	1	W/GREEN GLASS
7-2	84580-54P11	GLASS, QTR WINDOW RH	1	W/GRAY GLASS
8	84513-76F00	.MALE, GLASS FASTENER NO.2	2	
9	84582-54P00	.GARNISH, QTR WINDOW FR RH	1	
10	84584-73H00	.CLIP, QUARTER WINDOW FR	1	
11-1	84590-54P01	GLASS, QTR WINDOW LH	1	W/GREEN GLASS
11-2	84590-54P11	GLASS, QTR WINDOW LH	1	W/GRAY GLASS
12	84513-76F00	.MALE, GLASS FASTENER NO.2	2	
13	84584-73H00	.CLIP, QUARTER WINDOW FR	1	
14	84592-54P00	.GARNISH, QTR WINDOW FR LH	1	

FIG.800A

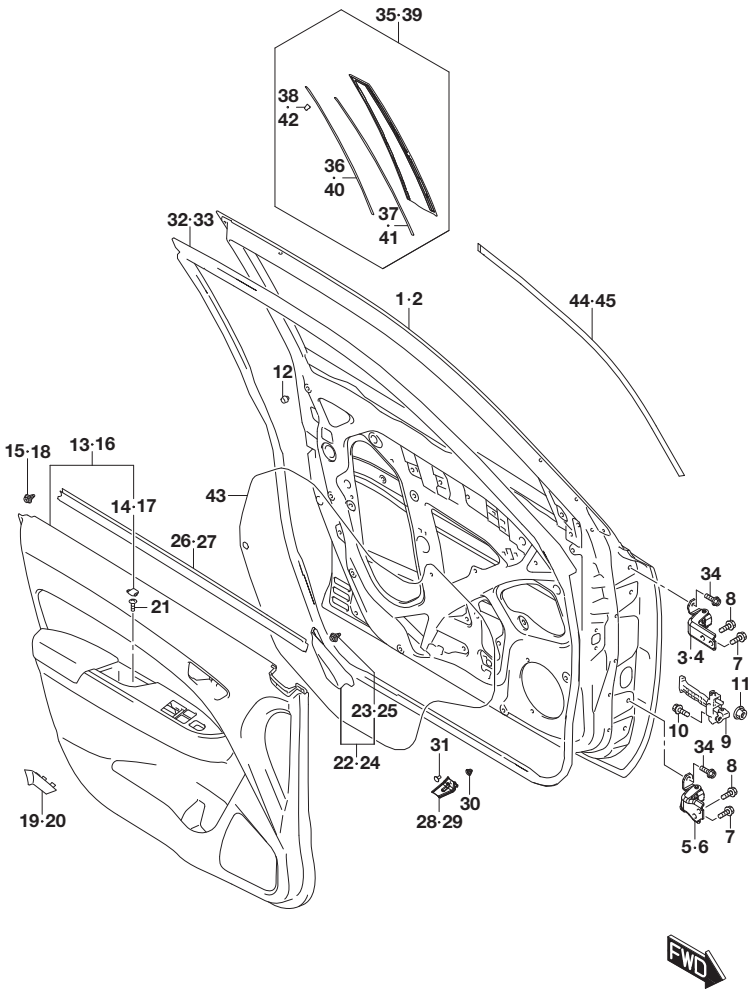

FIG.800A (3-L-8) FRONT DOOR PANEL (LHD:W/REAR MANUAL WINDOW)

REF NO.	PART NO.	DESCRIPTION	Q'TY	REMARKS
1	68001-54P01	PANEL ASSY, FR DR RH	1	
2	68002-54P01	PANEL ASSY, FR DR LH	1	
3	69310-68LA0	HINGE, FR DR UPR RH	1	
4	69320-68LA0	HINGE, FR DR UPR LH	1	
5	69330-68LA0	HINGE, FR DR LWR RH	1	
6	69340-68LA0	HINGE, FR DR LWR LH	1	
7	09113-08001	BOLT (8X20)	4	
8	01551-0820A	BOLT	4	
9	81810-86R00	STOP, FR DOOR OPEN	2	
10	09112-08015	BOLT (8X25)	2	
11	08316-1006A	NUT	4	
12	82711-68H00	STOPPER	4	
13	83710-54P70-ASJ	TRIM, FR DR RH (BLACK)	1	
14	83752-79J00-5PK	.CAP, SIDE DR INSIDE PULL CASE (BLACK)	1	
15	09409-10312	CLIP	9	
16	83720-54P90-ASJ	TRIM, FR DR LH (BLACK)	1	
17	83752-79J00-5PK	.CAP, SIDE DR INSIDE PULL CASE (BLACK)	1	
18	09409-10312	CLIP	9	
19	83755-68L00-5PK	CAP, SIDE DR INSIDE HDL BEZEL RH (BLACK)	1	
20	83756-68L00-5PK	CAP, SIDE DR INSIDE HDL BEZEL LH (BLACK)	1	
21	09132-05058	SCREW (5X12)	2	
22	84750-54P00-5PK	GARNISH, SASH BRKT INR RH (BLACK)	1	
23	09409-10312	.CLIP	1	
24	84790-54P00-5PK	GARNISH, SASH BRKT INR LH (BLACK)	1	

FIG.800B(3-L-10) FRONT DOOR PANEL (LHD:W/REAR POWER WINDOW)
FIG.800C(3-L-12) FRONT DOOR PANEL (RHD:W/REAR MANUAL WINDOW)
FIG.800D(3-L-14) FRONT DOOR PANEL (RHD:W/REAR POWER WINDOW)

FIG.800A

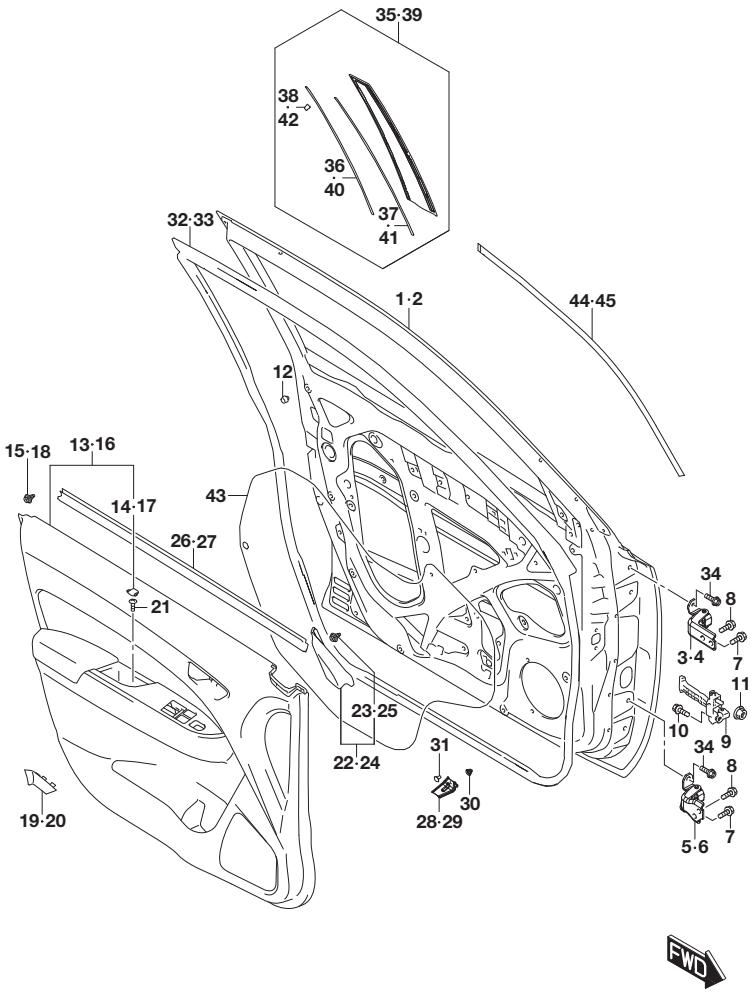

FIG.800A (3-L-9) FRONT DOOR PANEL (LHD:W/REAR MANUAL WINDOW)

REF NO.	PART NO.	DESCRIPTION	Q'TY	REMARKS
25	09409-10312	.CLIP	1	
26	83851-54P00	WEATHERSTRIP, FR DR INR RH	1	
27	83861-54P00	WEATHERSTRIP, FR DR INR LH	1	
28	83751-75HA0	BRACKET, DR TRIM RH	1	
29	83756-75HA0	BRACKET, DR TRIM LH	1	
30	09148-06007	NUT	2	
31	03241-0612A	SCREW	2	
32	84641-54P10	WEATHERSTRIP, FR DR OPNG RH	1	
33	84651-54P10	WEATHERSTRIP, FR DR OPNG LH	1	
34	09103-08533	BOLT (8X24.5)	8	
35	77420-54P01	GARNISH, FR DR CTR PLR RH	1	
36	77423-54P00	.TAPE, CTR PLR GARNISH NO.1	1	
37	77424-54P00	.TAPE, CTR PLR GARNISH NO.2	1	
38	09409-04309	.CLIP	1	
39	77430-54P01	GARNISH, FR DR CTR PLR LH	1	
40	77423-54P00	.TAPE, CTR PLR GARNISH NO.1	1	
41	77424-54P00	.TAPE, CTR PLR GARNISH NO.2	1	
42	09409-04309	.CLIP	1	
43	83911-54P00	COVER, FR DR SEALING	2	
44	83925-54P10-0CE	TAPE, FR DR SASH ROOF RH (BLACK)	1	BODY COLOR:ZCC,ZCD,ZCF,ZNL, ZQN,26U
45	83926-54P10-0CE	TAPE, FR DR SASH ROOF LH (BLACK)	1	BODY COLOR:ZCC,ZCD,ZCF,ZNL, ZQN,26U

FIG.800B

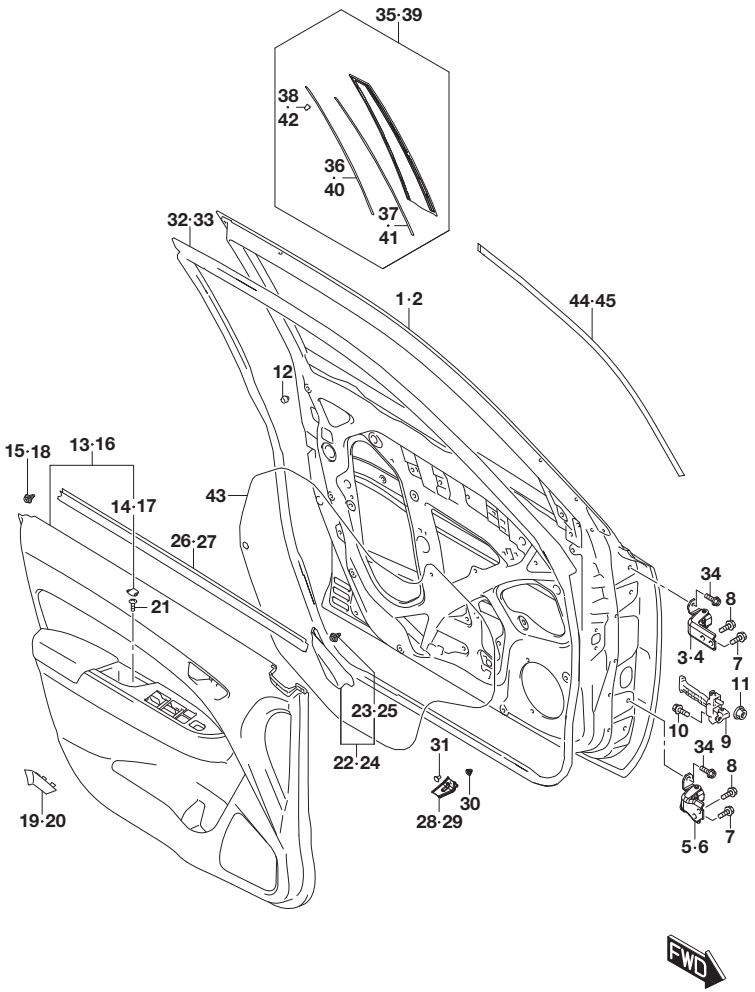

FIG.800B (3-L-10) FRONT DOOR PANEL (LHD:W/REAR POWER WINDOW)

REF NO.	PART NO.	DESCRIPTION	Q'TY	REMARKS
1	68001-54P01	PANEL ASSY, FR DR RH	1	
2	68002-54P01	PANEL ASSY, FR DR LH	1	
3	69310-68LA0	HINGE, FR DR UPR RH	1	
4	69320-68LA0	HINGE, FR DR UPR LH	1	
5	69330-68LA0	HINGE, FR DR LWR RH	1	
6	69340-68LA0	HINGE, FR DR LWR LH	1	
7	09113-08001	BOLT (8X20)	4	
8	01551-0820A	BOLT	4	
9	81810-86R00	STOP, FR DOOR OPEN	2	
10	09112-08015	BOLT (8X25)	2	
11	08316-1006A	NUT	4	
12	82711-68H00	STOPPER	4	
13-1	83710-54P50-C8B	TRIM, FR DR RH (BLACK/SILVER)	1	GL
13-2	83710-54P50-C8K	TRIM, FR DR RH (BLACK/SILVER)	1	GLX
14	83752-79J00-5PK	.CAP, SIDE DR INSIDE PULL CASE (BLACK)	1	
15	09409-10312	CLIP	9	
16-1	83720-54P50-C8B	TRIM, FR DR LH (BLACK/SILVER)	1	GL
16-2	83720-54P50-C8K	TRIM, FR DR LH (BLACK/SILVER)	1	GLX
17	83752-79J00-5PK	.CAP, SIDE DR INSIDE PULL CASE (BLACK)	1	
18	09409-10312	CLIP	9	
19	83755-68L00-5PK	CAP, SIDE DR INSIDE HDL BEZEL RH (BLACK)	1	
20	83756-68L00-5PK	CAP, SIDE DR INSIDE HDL BEZEL LH (BLACK)	1	
21	09132-05058	SCREW (5X12)	2	
22-1	84750-54P00-5PK	GARNISH, SASH BRKT INR RH (BLACK)	1	N/TWEETER
22-2	84750-54P10-5PK	GARNISH, SASH BRKT INR RH (BLACK)	1	W/TWEETER
23	09409-10312	.CLIP	1	
24-1	84790-54P00-5PK	GARNISH, SASH BRKT INR LH (BLACK)	1	N/TWEETER
24-2	84790-54P10-5PK	GARNISH, SASH BRKT INR LH (BLACK)	1	W/TWEETER

FIG.800B

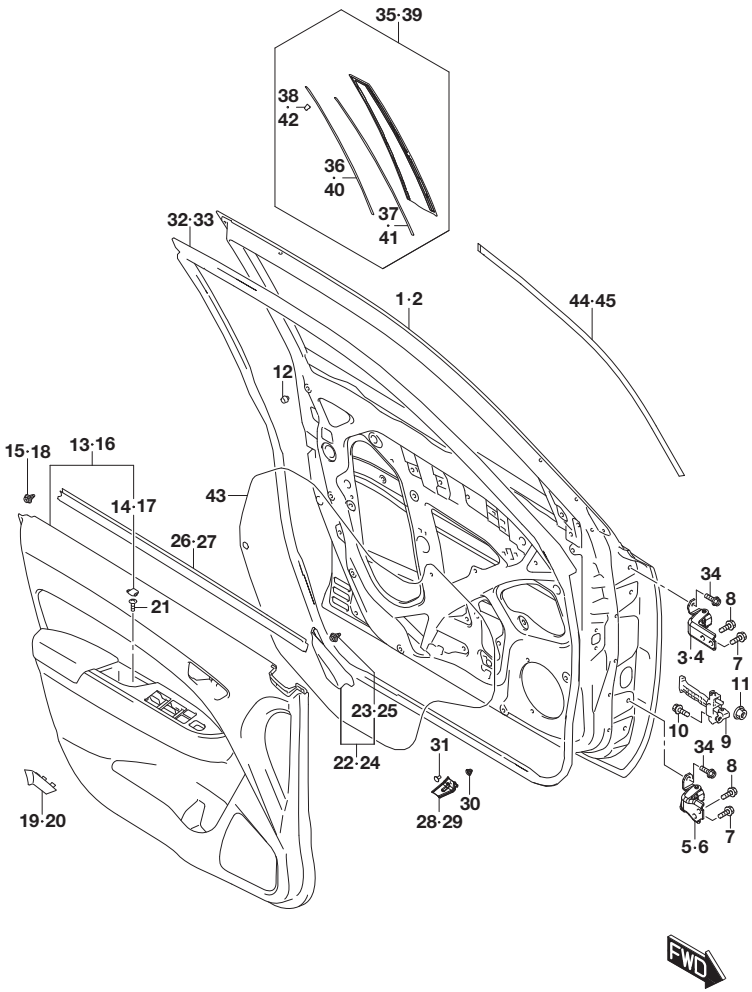

FIG.800B (3-L-11) FRONT DOOR PANEL (LHD:W/REAR POWER WINDOW)

REF NO.	PART NO.	DESCRIPTION	Q'TY	REMARKS
25	09409-10312	.CLIP	1	
26	83851-54P00	WEATHERSTRIP, FR DR INR RH	1	
27	83861-54P00	WEATHERSTRIP, FR DR INR LH	1	
28	83751-75HA0	BRACKET, DR TRIM RH	1	
29	83756-75HA0	BRACKET, DR TRIM LH	1	
30	09148-06007	NUT	2	
31	03241-0612A	SCREW	2	
32	84641-54P10	WEATHERSTRIP, FR DR OPNG RH	1	
33	84651-54P10	WEATHERSTRIP, FR DR OPNG LH	1	
34	09103-08533	BOLT (8X24.5)	8	
35	77420-54P01	GARNISH, FR DR CTR PLR RH	1	
36	77423-54P00	.TAPE, CTR PLR GARNISH NO.1	1	
37	77424-54P00	.TAPE, CTR PLR GARNISH NO.2	1	
38	09409-04309	.CLIP	1	
39	77430-54P01	GARNISH, FR DR CTR PLR LH	1	
40	77423-54P00	.TAPE, CTR PLR GARNISH NO.1	1	
41	77424-54P00	.TAPE, CTR PLR GARNISH NO.2	1	
42	09409-04309	.CLIP	1	
43	83911-54P00	COVER, FR DR SEALING	2	
44-1	83925-54P10-0CE	TAPE, FR DR SASH ROOF RH (BLACK)	1	BODY COLOR:A6H,DBG,ZCC,ZCD, ZCF,ZNL,ZQN,26U
44-2	83925-54P10-0CE	TAPE, FR DR SASH ROOF RH (BLACK)	1	BODY COLOR:A9G,A9H,A9L,A9N, DBF,DBH
45-1	83926-54P10-0CE	TAPE, FR DR SASH ROOF LH (BLACK)	1	BODY COLOR:A6H,DBG,ZCC,ZCD, ZCF,ZNL,ZQN,26U
45-2	83926-54P10-0CE	TAPE, FR DR SASH ROOF LH (BLACK)	1	BODY COLOR:A9G,A9H,A9L,A9N, DBF,DBH

FIG.800C

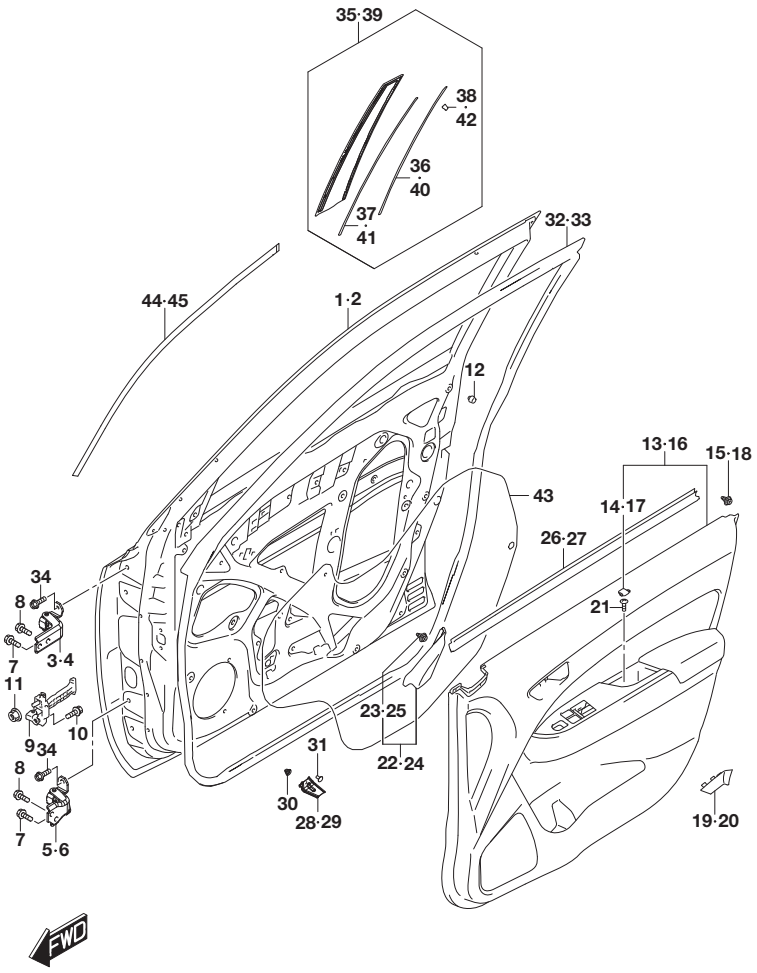

FIG.800C (3-L-12) FRONT DOOR PANEL (RHD:W/REAR MANUAL WINDOW)

REF NO.	PART NO.	DESCRIPTION	Q'TY	REMARKS
1	68001-54P01	PANEL ASSY, FR DR RH	1	
2	68002-54P01	PANEL ASSY, FR DR LH	1	
3	69310-68LA0	HINGE, FR DR UPR RH	1	
4	69320-68LA0	HINGE, FR DR UPR LH	1	
5	69330-68LA0	HINGE, FR DR LWR RH	1	
6	69340-68LA0	HINGE, FR DR LWR LH	1	
7	09113-08001	BOLT (8X20)	4	
8	01551-0820A	BOLT	4	
9	81810-86R00	STOP, FR DOOR OPEN	2	
10	09112-08015	BOLT (8X25)	2	
11	08316-1006A	NUT	4	
12	82711-68H00	STOPPER	4	
13	83710-54P80-ASJ	TRIM, FR DR RH (BLACK)	1	
14	83752-79J00-5PK	.CAP, SIDE DR INSIDE PULL CASE (BLACK)	1	
15	09409-10312	CLIP	9	
16	83720-54P60-ASJ	TRIM, FR DR LH (BLACK)	1	
17	83752-79J00-5PK	.CAP, SIDE DR INSIDE PULL CASE (BLACK)	1	
18	09409-10312	CLIP	9	
19	83755-68L00-5PK	CAP, SIDE DR INSIDE HDL BEZEL RH (BLACK)	1	
20	83756-68L00-5PK	CAP, SIDE DR INSIDE HDL BEZEL LH (BLACK)	1	
21	09132-05058	SCREW (5X12)	2	
22	84750-54P00-5PK	GARNISH, SASH BRKT INR RH (BLACK)	1	
23	09409-10312	.CLIP	1	
24	84790-54P00-5PK	GARNISH, SASH BRKT INR LH (BLACK)	1	
25	09409-10312	.CLIP	1	
26	83851-54P00	WEATHERSTRIP, FR DR INR RH	1	
27	83861-54P00	WEATHERSTRIP, FR DR INR LH	1	
28	83751-75HA0	BRACKET, DR TRIM RH	1	
29	83756-75HA0	BRACKET, DR TRIM LH	1	
30	09148-06007	NUT	2	

FIG.800C

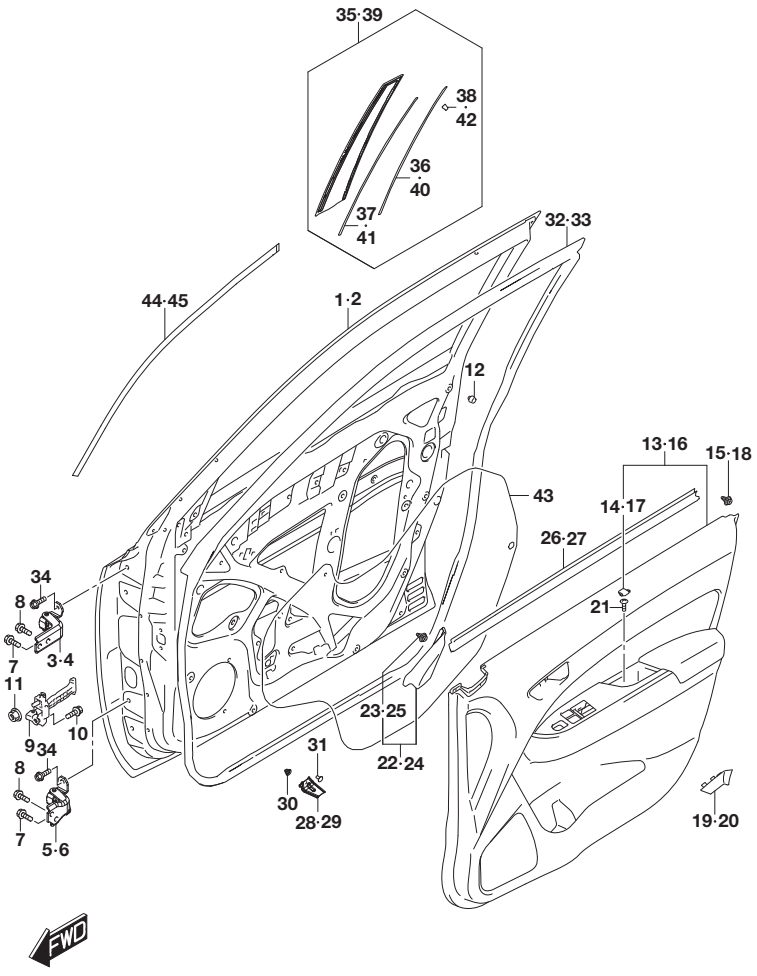

FIG.800C (3-L-13) FRONT DOOR PANEL (RHD:W/REAR MANUAL WINDOW)

REF NO.	PART NO.	DESCRIPTION	Q'TY	REMARKS
31	03241-0612A	SCREW	2	
32	84641-54P10	WEATHERSTRIP, FR DR OPNG RH	1	
33	84651-54P10	WEATHERSTRIP, FR DR OPNG LH	1	
34	09103-08533	BOLT (8X24.5)	8	
35	77420-54P01	GARNISH, FR DR CTR PLR RH	1	
36	77423-54P00	.TAPE, CTR PLR GARNISH NO.1	1	
37	77424-54P00	.TAPE, CTR PLR GARNISH NO.2	1	
38	09409-04309	.CLIP	1	
39	77430-54P01	GARNISH, FR DR CTR PLR LH	1	
40	77423-54P00	.TAPE, CTR PLR GARNISH NO.1	1	
41	77424-54P00	.TAPE, CTR PLR GARNISH NO.2	1	
42	09409-04309	.CLIP	1	
43	83911-54P00	COVER, FR DR SEALING	2	
44	83925-54P10-0CE	TAPE, FR DR SASH ROOF RH (BLACK)	1	BODY COLOR:ZCC,ZCD,ZCF,ZNL, ZQN,26U
45	83926-54P10-0CE	TAPE, FR DR SASH ROOF LH (BLACK)	1	BODY COLOR:ZCC,ZCD,ZCF,ZNL, ZQN,26U

FIG.800D

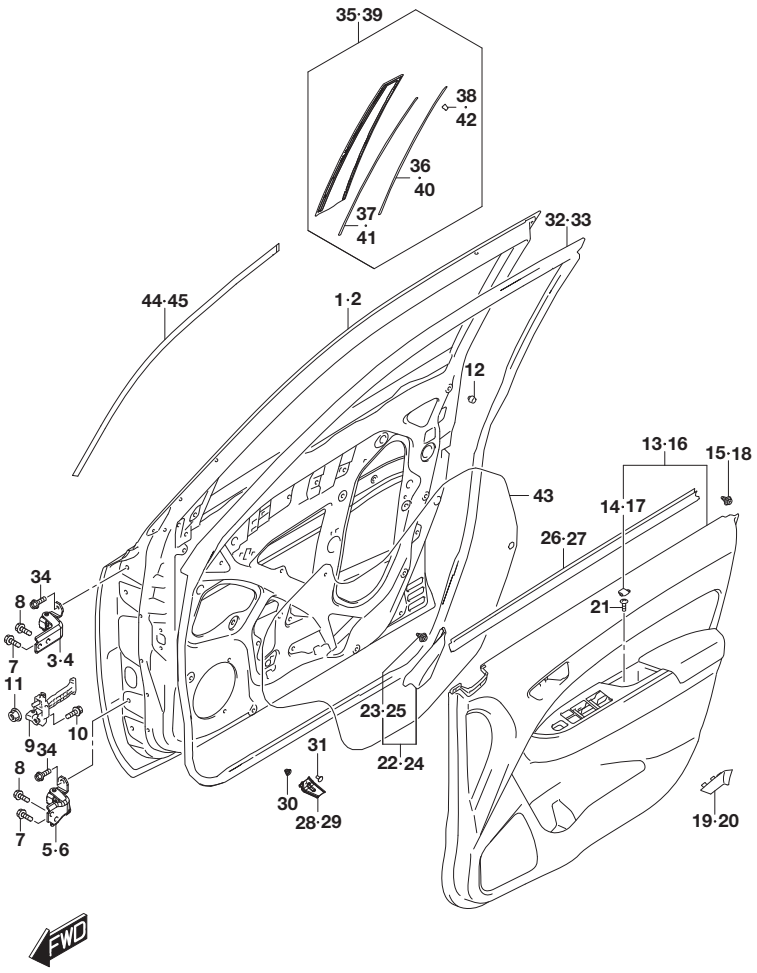

FIG.800D (3-L-14) FRONT DOOR PANEL (RHD:W/REAR POWER WINDOW)

REF NO.	PART NO.	DESCRIPTION	Q'TY	REMARKS
1	68001-54P01	PANEL ASSY, FR DR RH	1	
2	68002-54P01	PANEL ASSY, FR DR LH	1	
3	69310-68LA0	HINGE, FR DR UPR RH	1	
4	69320-68LA0	HINGE, FR DR UPR LH	1	
5	69330-68LA0	HINGE, FR DR LWR RH	1	
6	69340-68LA0	HINGE, FR DR LWR LH	1	
7	09113-08001	BOLT (8X20)	4	
8	01551-0820A	BOLT	4	
9	81810-86R00	STOP, FR DOOR OPEN	2	
10	09112-08015	BOLT (8X25)	2	
11	08316-1006A	NUT	4	
12	82711-68H00	STOPPER	4	
13-1	83710-54P40-C8B	TRIM, FR DR RH (BLACK/SILVER)	1	GL
13-2	83710-54P40-C8K	TRIM, FR DR RH (BLACK/SILVER)	1	GLX
14	83752-79J00-5PK	.CAP, SIDE DR INSIDE PULL CASE (BLACK)	1	
15	09409-10312	CLIP	9	
16-1	83720-54P40-C8B	TRIM, FR DR LH (BLACK/SILVER)	1	GL
16-2	83720-54P40-C8K	TRIM, FR DR LH (BLACK/SILVER)	1	GLX
17	83752-79J00-5PK	.CAP, SIDE DR INSIDE PULL CASE (BLACK)	1	
18	09409-10312	CLIP	9	
19	83755-68L00-5PK	CAP, SIDE DR INSIDE HDL BEZEL RH (BLACK)	1	
20	83756-68L00-5PK	CAP, SIDE DR INSIDE HDL BEZEL LH (BLACK)	1	
21	09132-05058	SCREW (5X12)	2	
22-1	84750-54P00-5PK	GARNISH, SASH BRKT INR RH (BLACK)	1	N/TWEETER
22-2	84750-54P10-5PK	GARNISH, SASH BRKT INR RH (BLACK)	1	W/TWEETER
23	09409-10312	.CLIP	1	
24-1	84790-54P00-5PK	GARNISH, SASH BRKT INR LH (BLACK)	1	N/TWEETER
24-2	84790-54P10-5PK	GARNISH, SASH BRKT INR LH (BLACK)	1	W/TWEETER

FIG.800D

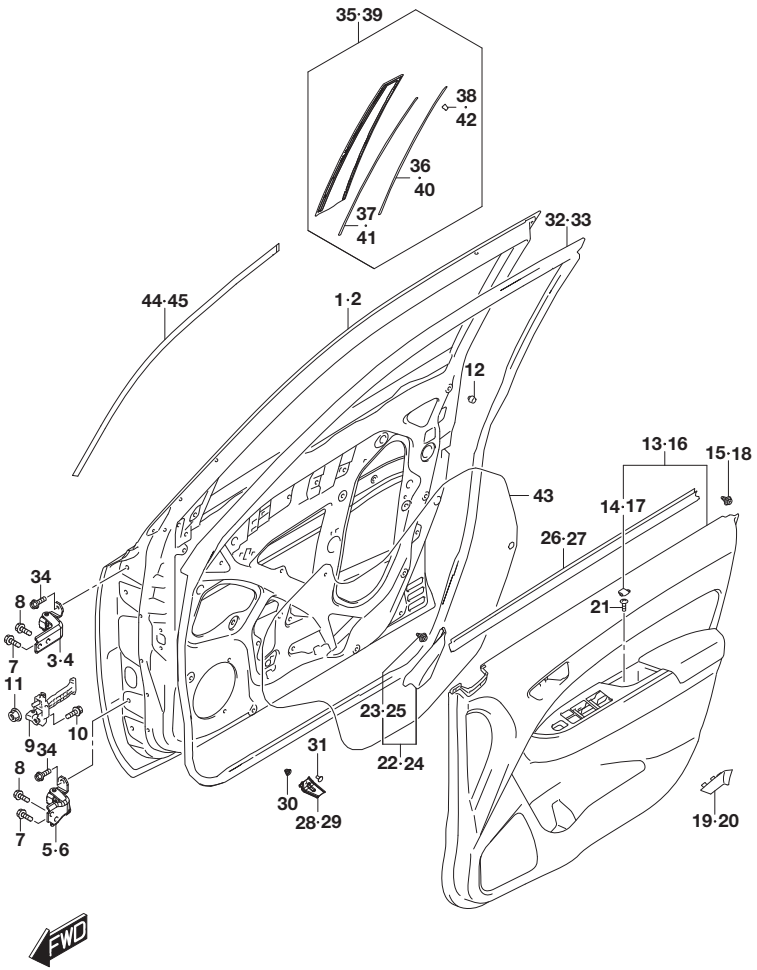

FIG.800D (3-L-15) FRONT DOOR PANEL (RHD:W/REAR POWER WINDOW)

REF NO.	PART NO.	DESCRIPTION	Q'TY	REMARKS
25	09409-10312	.CLIP	1	
26	83851-54P00	WEATHERSTRIP, FR DR INR RH	1	
27	83861-54P00	WEATHERSTRIP, FR DR INR LH	1	
28	83751-75HA0	BRACKET, DR TRIM RH	1	
29	83756-75HA0	BRACKET, DR TRIM LH	1	
30	09148-06007	NUT	2	
31	03241-0612A	SCREW	2	
32	84641-54P10	WEATHERSTRIP, FR DR OPNG RH	1	
33	84651-54P10	WEATHERSTRIP, FR DR OPNG LH	1	
34	09103-08533	BOLT (8X24.5)	8	
35	77420-54P01	GARNISH, FR DR CTR PLR RH	1	
36	77423-54P00	.TAPE, CTR PLR GARNISH NO.1	1	
37	77424-54P00	.TAPE, CTR PLR GARNISH NO.2	1	
38	09409-04309	.CLIP	1	
39	77430-54P01	GARNISH, FR DR CTR PLR LH	1	
40	77423-54P00	.TAPE, CTR PLR GARNISH NO.1	1	
41	77424-54P00	.TAPE, CTR PLR GARNISH NO.2	1	
42	09409-04309	.CLIP	1	
43	83911-54P00	COVER, FR DR SEALING	2	
44-1	83925-54P10-0CE	TAPE, FR DR SASH ROOF RH (BLACK)	1	BODY COLOR:A6H,DBG,ZCC,ZCD, ZCF,ZNL,ZQN,26U
44-2	83925-54P10-0CE	TAPE, FR DR SASH ROOF RH (BLACK)	1	BODY COLOR:A9G,A9H,A9L,A9N, DBF,DBH
45-1	83926-54P10-0CE	TAPE, FR DR SASH ROOF LH (BLACK)	1	BODY COLOR:A6H,DBG,ZCC,ZCD, ZCF,ZNL,ZQN,26U
45-2	83926-54P10-0CE	TAPE, FR DR SASH ROOF LH (BLACK)	1	BODY COLOR:A9G,A9H,A9L,A9N, DBF,DBH

FIG.801A

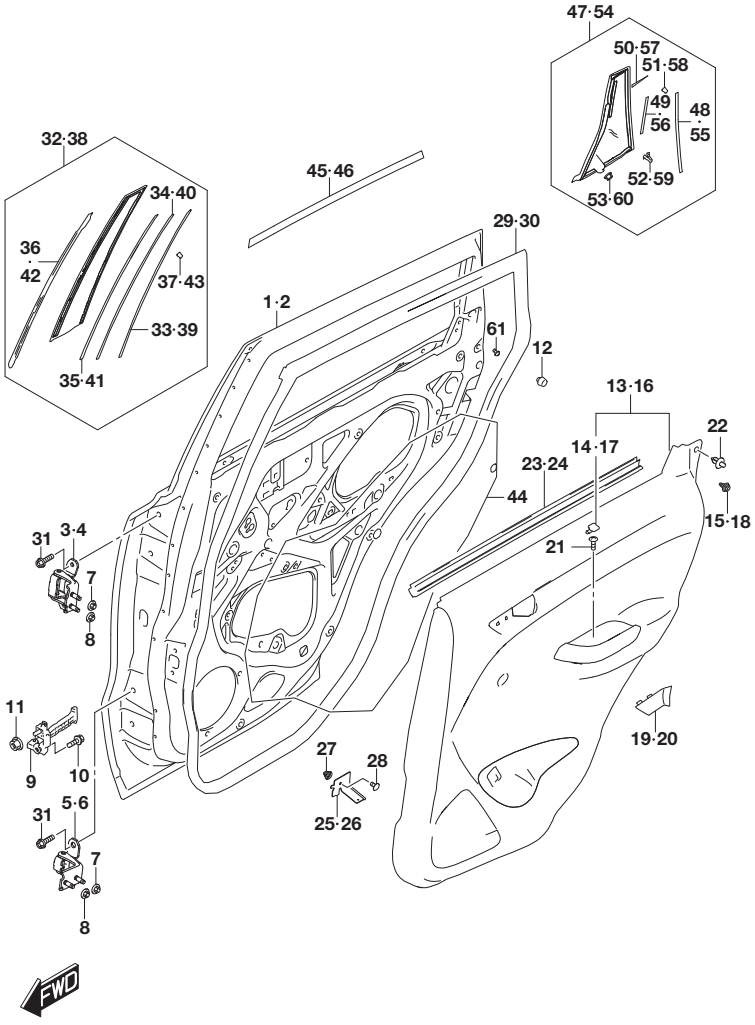

FIG.801A (4-B-2) REAR DOOR PANEL (W/REAR MANUAL WINDOW)

REF NO.	PART NO.	DESCRIPTION	Q'TY	REMARKS
1	68003-54P01	PANEL ASSY, RR DR RH	1	
2	68004-54P01	PANEL ASSY, RR DR LH	1	
3	69410-68LA0	HINGE, RR DR UPR RH	1	
4	69420-68LA0	HINGE, RR DR UPR LH	1	
5	69430-68LA0	HINGE, RR DR LWR RH	1	
6	69440-68LA0	HINGE, RR DR LWR LH	1	
7	09159-08132	NUT	4	
8	08361-2508A	NUT	4	
9	81830-86R00	STOP, REAR DOOR OPEN	2	
10	09112-08015	BOLT (8X25)	2	
11	08316-1006A	NUT	4	
12	82711-68H00	STOPPER	2	
13	83730-54P00-5PK	TRIM, RR DR RH (BLACK)	1	
14	83752-79J00-5PK	.CAP, SIDE DR INSIDE PULL CASE (BLACK)	1	
15	09409-10312	CLIP	8	
16	83740-54P00-5PK	TRIM, RR DR LH (BLACK)	1	
17	83752-79J00-5PK	.CAP, SIDE DR INSIDE PULL CASE (BLACK)	1	
18	09409-10312	CLIP	8	
19	83755-68L00-5PK	CAP, SIDE DR INSIDE HDL BEZEL RH (BLACK)	1	
20	83756-68L00-5PK	CAP, SIDE DR INSIDE HDL BEZEL LH (BLACK)	1	
21	09132-05058	SCREW (5X12)	2	
22	09409-06314-5PK	CLIP (5.9X20.5) (BLACK)	2	
23	83871-54P00	WEATHERSTRIP, RR DR INR RH	1	
24	83881-54P00	WEATHERSTRIP, RR DR INR LH	1	
25	83751-62K00	BRACKET, DR TRIM RH	1	
26	83756-62K00	BRACKET, DR TRIM LH	1	
27	09148-06007	NUT	2	
28	03241-0612A	SCREW	2	
29	84661-54P01	WEATHERSTRIP, RR DR OPNG RH	1	
30	84671-54P01	WEATHERSTRIP, RR DR OPNG LH	1	
31	09103-08533	BOLT (8X24.5)	8	
32	77440-54P02	GARNISH, RR DR CTR PLR RH	1	

FIG.801A

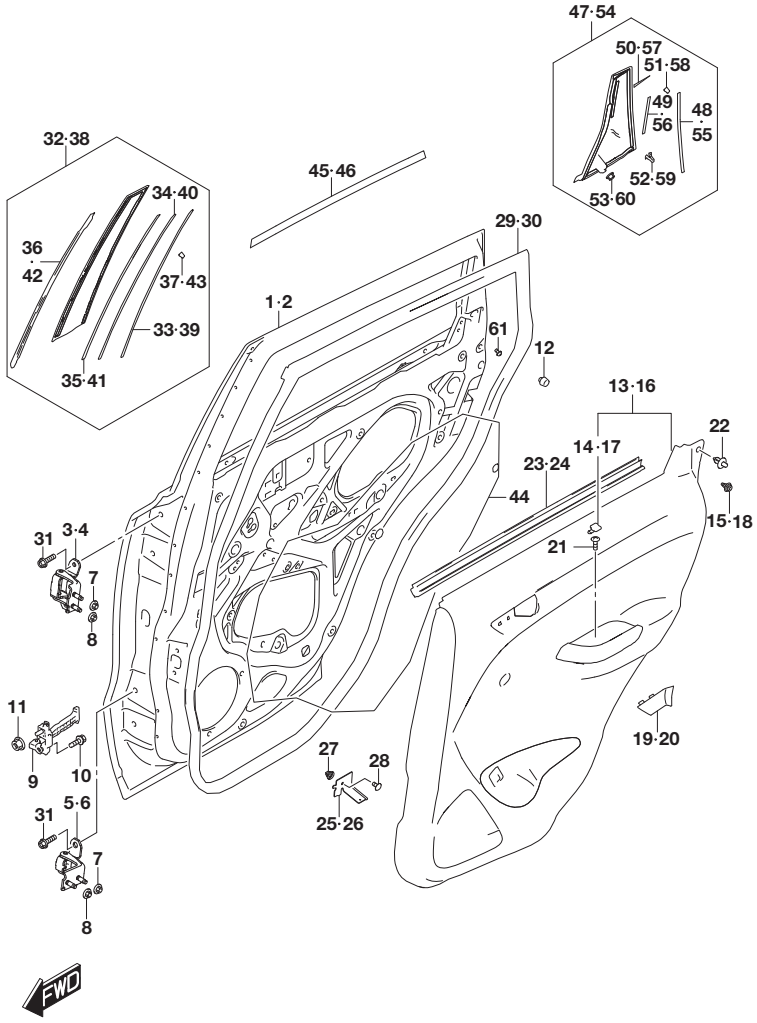

FIG.801A (4-B-3) REAR DOOR PANEL (W/REAR MANUAL WINDOW)

REF NO.	PART NO.	DESCRIPTION	Q'TY	REMARKS
33	77423-54P00	.TAPE, CTR PLR GARNISH NO.1	1	
34	77443-54P00	.TAPE, CTR PLR GARNISH NO.5	1	
35	77444-54P00	.TAPE, CTR PLR GARNISH NO.4	1	
36	77442-54P00	.WEATHERSTRIP, RR DR CTR PLR RH	1	
37	09409-04309	.CLIP	1	
38	77450-54P02	GARNISH, RR DR CTR PLR LH	1	
39	77423-54P00	.TAPE, CTR PLR GARNISH NO.1	1	
40	77443-54P00	.TAPE, CTR PLR GARNISH NO.5	1	
41	77444-54P00	.TAPE, CTR PLR GARNISH NO.4	1	
42	77452-54P00	.WEATHERSTRIP, RR DR CTR PLR LH	1	
43	09409-04309	.CLIP	1	
44	83913-54P00	COVER, RR DR SEALING	2	
45	83935-54P10-0CE	TAPE, RR DR SASH ROOF RH (BLACK)	1	BODY COLOR:ZCC,ZCD,ZCF,ZNL, ZQN,26U
46	83936-54P10-0CE	TAPE, RR DR SASH ROOF LH (BLACK)	1	BODY COLOR:ZCC,ZCD,ZCF,ZNL, ZQN,26U
47	83970-54P02	GARNISH, RR DR RR OUTER RH	1	
48	83972-54P00	.TAPE, RR DR RR OTR GARNISH NO.1	1	
49	83973-54P00	.TAPE, RR DR RR OTR GARNISH NO.2	1	
50	83979-54P00	.TAPE, RR DR RR OTR GARNISH NO.3	1	
51	09409-04309	.CLIP	1	
52	09409-06324	.CLIP	1	
53	08316-1005A	.NUT	1	
54	83980-54P02	GARNISH, RR DR RR OUTER LH	1	
55	83972-54P00	.TAPE, RR DR RR OTR GARNISH NO.1	1	
56	83973-54P00	.TAPE, RR DR RR OTR GARNISH NO.2	1	
57	83989-54P00	.TAPE, RR DR RR OTR GARNISH NO.4	1	
58	09409-04309	.CLIP	1	

FIG.801A

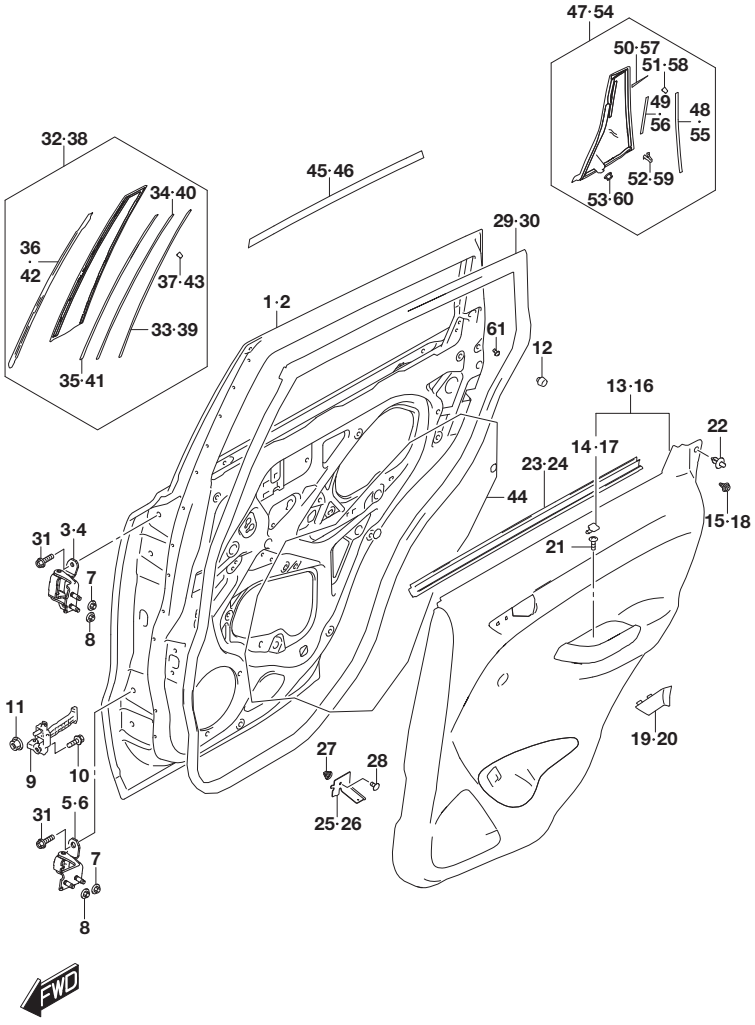

FIG.801A (4-B-4) REAR DOOR PANEL (W/REAR MANUAL WINDOW)

REF NO.	PART NO.	DESCRIPTION	Q'TY	REMARKS
59	09409-06324	.CLIP	1	
60	08316-1005A	.NUT	1	
61	09136-05067	SCREW (5X10)	2	

FIG.801B

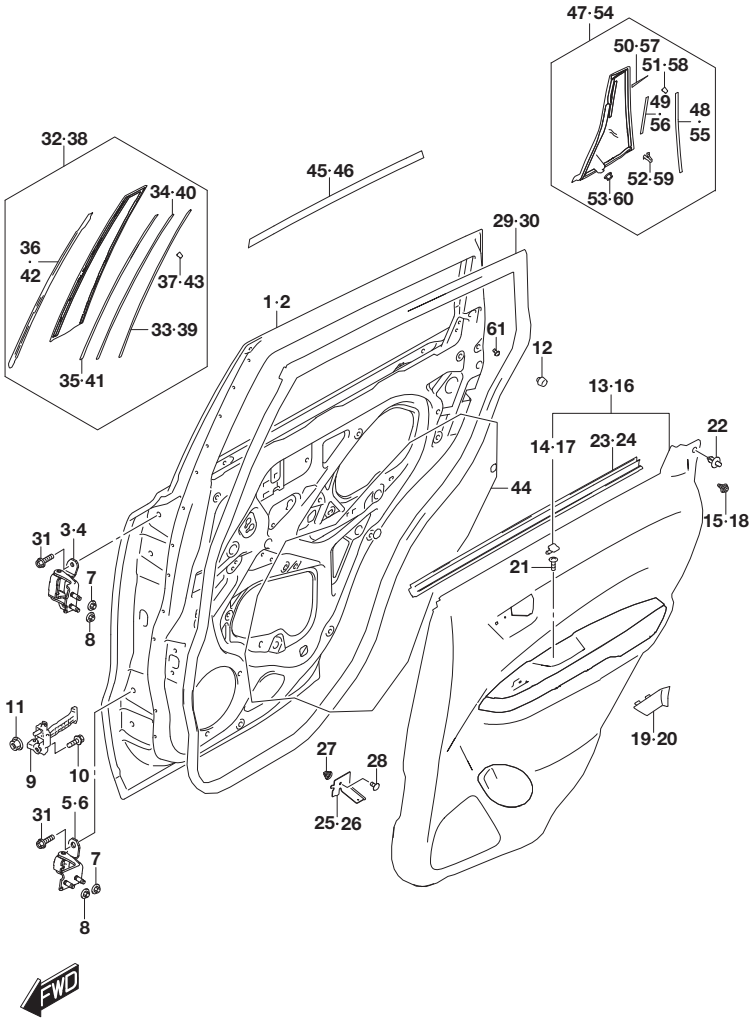

FIG.801B (4-B-5) REAR DOOR PANEL (W/REAR POWER WINDOW)

REF NO.	PART NO.	DESCRIPTION	Q'TY	REMARKS
1	68003-54P01	PANEL ASSY, RR DR RH	1	
2	68004-54P01	PANEL ASSY, RR DR LH	1	
3	69410-68LA0	HINGE, RR DR UPR RH	1	
4	69420-68LA0	HINGE, RR DR UPR LH	1	
5	69430-68LA0	HINGE, RR DR LWR RH	1	
6	69440-68LA0	HINGE, RR DR LWR LH	1	
7	09159-08132	NUT	4	
8	08361-2508A	NUT	4	
9	81830-86R00	STOP, REAR DOOR OPEN	2	
10	09112-08015	BOLT (8X25)	2	
11	08316-1006A	NUT	4	
12	82711-68H00	STOPPER	2	
13	83730-54P20-C8J	TRIM, RR DR RH (BLACK/SILVER)	1	
14	83752-79J00-5PK	.CAP, SIDE DR INSIDE PULL CASE (BLACK)	1	
15	09409-10312	CLIP	8	
16	83740-54P20-C8J	TRIM, RR DR LH (BLACK/SILVER)	1	
17	83752-79J00-5PK	.CAP, SIDE DR INSIDE PULL CASE (BLACK)	1	
18	09409-10312	CLIP	8	
19	83755-68L00-5PK	CAP, SIDE DR INSIDE HDL BEZEL RH (BLACK)	1	
20	83756-68L00-5PK	CAP, SIDE DR INSIDE HDL BEZEL LH (BLACK)	1	
21	09132-05058	SCREW (5X12)	2	
22	09409-06314-5PK	CLIP (5.9X20.5) (BLACK)	2	
23	83871-54P00	WEATHERSTRIP, RR DR INR RH	1	
24	83881-54P00	WEATHERSTRIP, RR DR INR LH	1	
25	83751-62K00	BRACKET, DR TRIM RH	1	
26	83756-62K00	BRACKET, DR TRIM LH	1	
27	09148-06007	NUT	2	
28	03241-0612A	SCREW	2	
29	84661-54P01	WEATHERSTRIP, RR DR OPNG RH	1	
30	84671-54P01	WEATHERSTRIP, RR DR OPNG LH	1	
31	09103-08533	BOLT (8X24.5)	8	
32	77440-54P02	GARNISH, RR DR CTR PLR RH	1	

FIG.801B

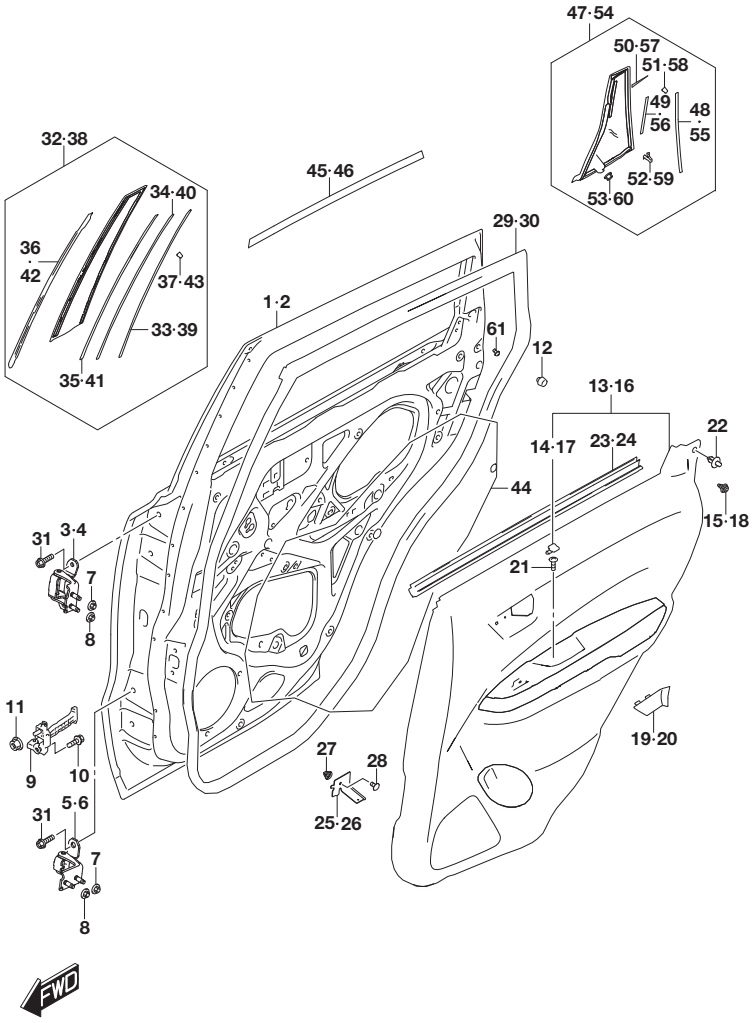

FIG.801B (4-B-6) REAR DOOR PANEL (W/REAR POWER WINDOW)

REF NO.	PART NO.	DESCRIPTION	Q'TY	REMARKS
33	77423-54P00	.TAPE, CTR PLR GARNISH NO.1	1	
34	77443-54P00	.TAPE, CTR PLR GARNISH NO.5	1	
35	77444-54P00	.TAPE, CTR PLR GARNISH NO.4	1	
36	77442-54P00	.WEATHERSTRIP, RR DR CTR PLR RH	1	
37	09409-04309	.CLIP	1	
38	77450-54P02	GARNISH, RR DR CTR PLR LH	1	
39	77423-54P00	.TAPE, CTR PLR GARNISH NO.1	1	
40	77443-54P00	.TAPE, CTR PLR GARNISH NO.5	1	
41	77444-54P00	.TAPE, CTR PLR GARNISH NO.4	1	
42	77452-54P00	.WEATHERSTRIP, RR DR CTR PLR LH	1	
43	09409-04309	.CLIP	1	
44	83913-54P00	COVER, RR DR SEALING	2	
45-1	83935-54P10-0CE	TAPE, RR DR SASH ROOF RH (BLACK)	1	BODY COLOR:A6H,DBG,ZCC,ZCD, ZCF,ZNL,ZQN,26U
45-2	83935-54P10-0CE	TAPE, RR DR SASH ROOF RH (BLACK)	1	BODY COLOR:A9G,A9H,A9L,A9N, DBF,DBH
46-1	83936-54P10-0CE	TAPE, RR DR SASH ROOF LH (BLACK)	1	BODY COLOR:A6H,DBG,ZCC,ZCD, ZCF,ZNL,ZQN,26U
46-2	83936-54P10-0CE	TAPE, RR DR SASH ROOF LH (BLACK)	1	BODY COLOR:A9G,A9H,A9L,A9N, DBF,DBH
47	83970-54P02	GARNISH, RR DR RR OUTER RH	1	
48	83972-54P00	.TAPE, RR DR RR OTR GARNISH NO.1	1	
49	83973-54P00	.TAPE, RR DR RR OTR GARNISH NO.2	1	
50	83979-54P00	.TAPE, RR DR RR OTR GARNISH NO.3	1	
51	09409-04309	.CLIP	1	
52	09409-06324	.CLIP	1	
53	08316-1005A	.NUT	1	
54	83980-54P02	GARNISH, RR DR RR OUTER LH	1	
55	83972-54P00	.TAPE, RR DR RR OTR GARNISH NO.1	1	

FIG.801B

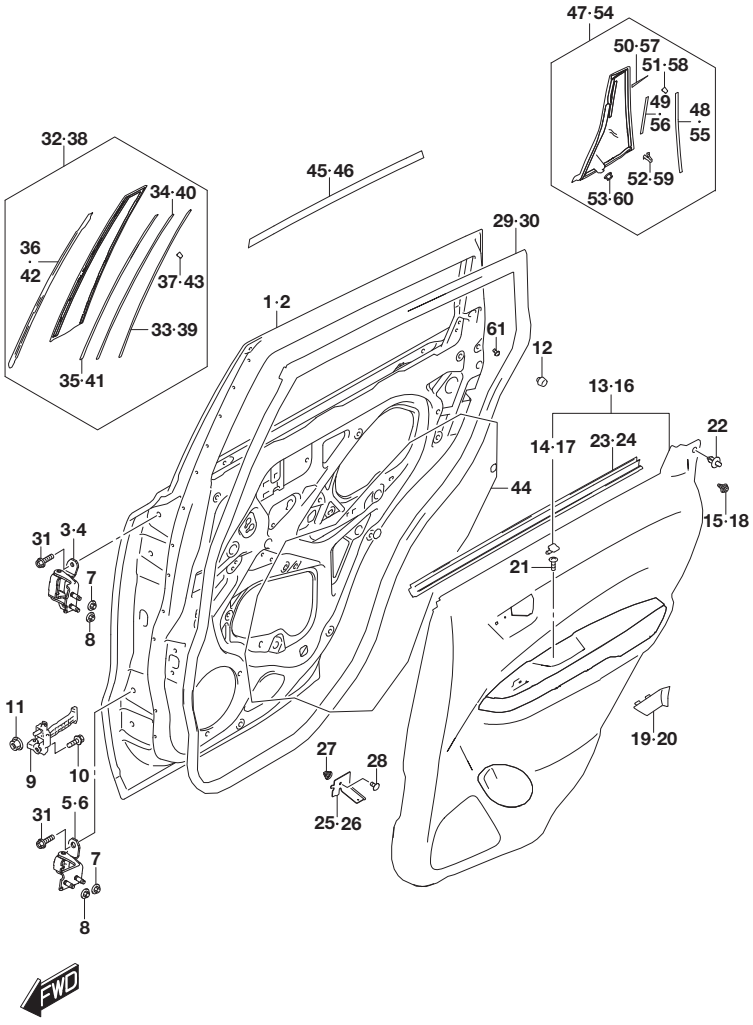

FIG.801B (4-B-7) REAR DOOR PANEL (W/REAR POWER WINDOW)

REF NO.	PART NO.	DESCRIPTION	Q'TY	REMARKS
56	83973-54P00	.TAPE, RR DR RR OTR GARNISH NO.2	1	
57	83989-54P00	.TAPE, RR DR RR OTR GARNISH NO.4	1	
58	09409-04309	.CLIP	1	
59	09409-06324	.CLIP	1	
60	08316-1005A	.NUT	1	
61	09136-05067	SCREW (5X10)	2	

FIG.805A

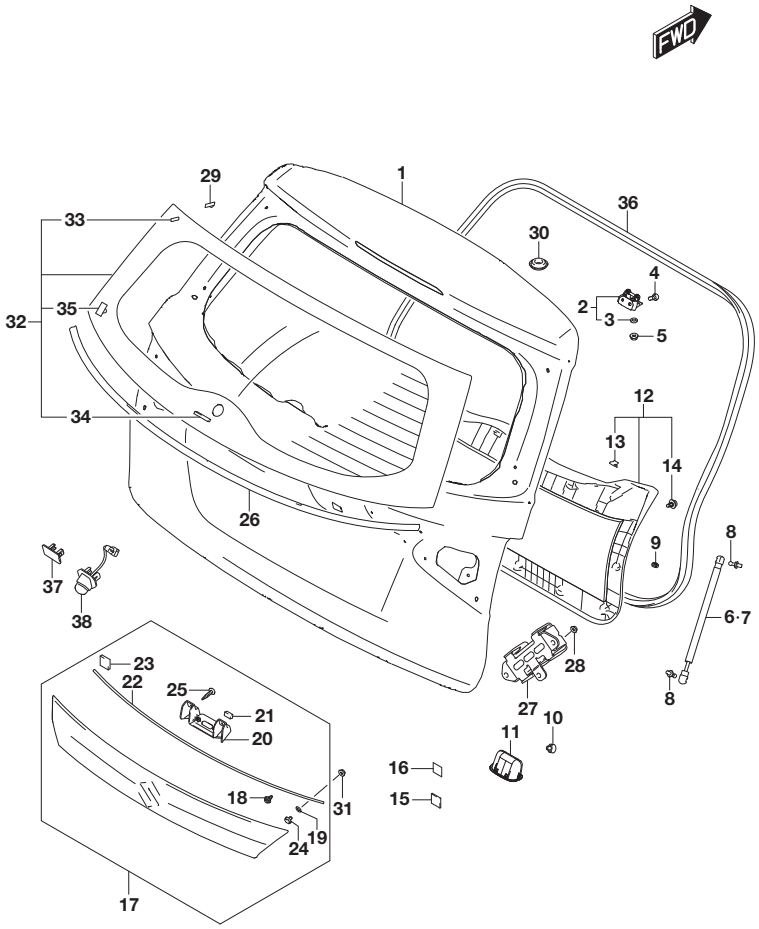

FIG.805A (4-B-8) BACK DOOR PANEL (N/PUSH START)

REF NO.	PART NO.	DESCRIPTION	Q'TY	REMARKS
1-1	69100-86R00	PANEL ASSY, BK DR	1	K10C
1-2	69100-54P01	PANEL ASSY, BK DR	1	K14C,K14D
2	69510-68L01	HINGE, BACK DR	2	
3	69571-76G00	.PACKING, BACK DR HNG	2	
4	09111-06086	BOLT (6X12)	4	
5	08361-2508A	NUT	2	
6-1	81850-86RV0	BALANCER, BK DR RH	1	K10C
6-2	81850-54P02	BALANCER, BK DR RH	1	K14C,K14D
7-1	81860-86RV0	BALANCER, BK DR LH	1	K10C
7-2	81860-54P02	BALANCER, BK DR LH	1	K14C,K14D
8	81871-54P00	BALLSTUD, BACK DR BALANCER	4	
9	82683-80E22	CUSHION, BACK DR SIDE	2	
10	82684-72M00	CUSHION	2	
11	82841-82G02	HANDLE, BACK DR INNER	1	
12	83770-86R00-5PK	TRIM, BACK DR (BLACK)	1	
13	09409-07335	.CLIP	1	
14	09409-10312	.CLIP	15	
15	63191-25C00	CUSHION (30X40)	3	
16	77151-82000	FILM	2	
17-1	83940-54P01-ZCC	GARNISH, BK DR LICENSE (SILVER)	1	N/BACK CAMERA
17-2	83940-54P01-ZCD	GARNISH, BK DR LICENSE (GRAY)	1	N/BACK CAMERA BODY COLOR:A9G,ZCD
17-3	83940-54P01-ZCE	GARNISH, BK DR LICENSE (BLACK)	1	N/BACK CAMERA
17-4	83940-54P01-ZCF	GARNISH, BK DR LICENSE (RED)	1	N/BACK CAMERA BODY COLOR:A9H,ZCF
17-5	83940-54P01-ZNL	GARNISH, BK DR LICENSE (WHITE)	1	N/BACK CAMERA
17-6	83940-54P01-ZQN	GARNISH, BK DR LICENSE (TURQUOISE)	1	N/BACK CAMERA BODY COLOR:A6H,A9L,ZQN
17-7	83940-54P01-ZQQ	GARNISH, BK DR LICENSE (IVORY)	1	N/BACK CAMERA BODY COLOR:A9N
17-8	83940-54P01-ZZD	GARNISH, BK DR LICENSE (BLUE)	1	N/BACK CAMERA BODY COLOR:DBF
17-9	83940-54P01-ZZE	GARNISH, BK DR LICENSE (YELLOW)	1	N/BACK CAMERA BODY COLOR:DBG,DBH
17-10	83940-54P01-26U	GARNISH, BK DR LICENSE (WHITE)	1	N/BACK CAMERA

FIG.805A

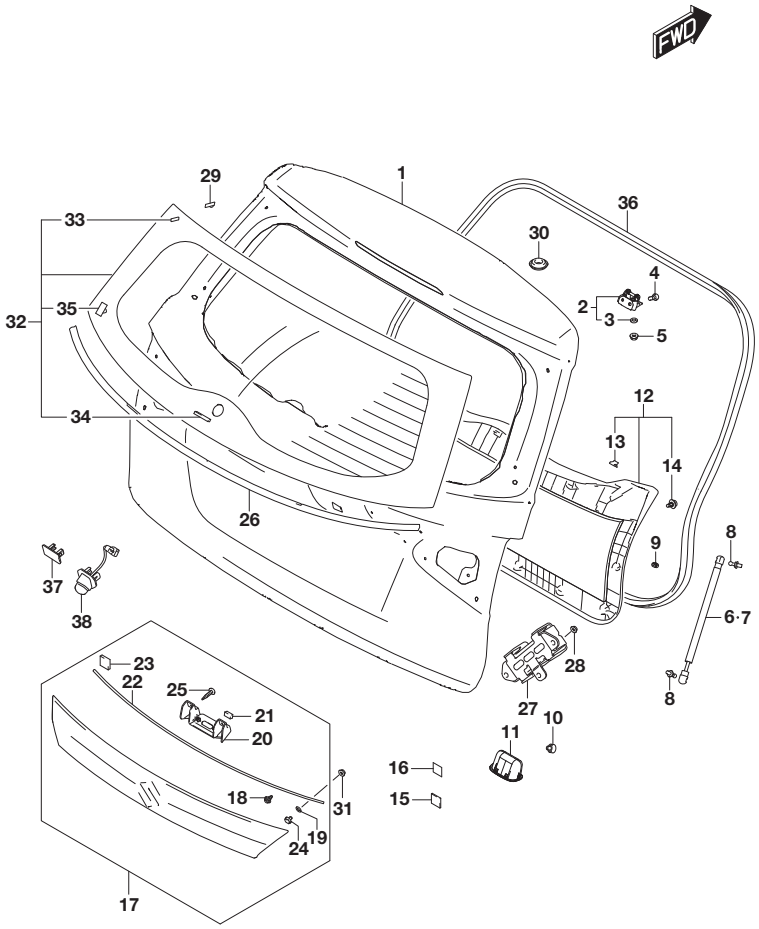

FIG.805A (4-B-9) BACK DOOR PANEL (N/PUSH START)

REF NO.	PART NO.	DESCRIPTION	Q'TY	REMARKS
17-11	83940-54P11-ZCC	GARNISH, BK DR LICENSE (SILVER)	1	W/BACK CAMERA
17-12	83940-54P11-ZCD	GARNISH, BK DR LICENSE (GRAY)	1	W/BACK CAMERA BODY COLOR:A9G,ZCD
17-13	83940-54P11-ZCE	GARNISH, BK DR LICENSE (BLACK)	1	W/BACK CAMERA
17-14	83940-54P11-ZCF	GARNISH, BK DR LICENSE (RED)	1	W/BACK CAMERA BODY COLOR:A9H,ZCF
17-15	83940-54P11-ZNL	GARNISH, BK DR LICENSE (WHITE)	1	W/BACK CAMERA
17-16	83940-54P11-ZQN	GARNISH, BK DR LICENSE (TURQUOISE)	1	W/BACK CAMERA BODY COLOR:A6H,A9L,ZQN
17-17	83940-54P11-ZQQ	GARNISH, BK DR LICENSE (IVORY)	1	W/BACK CAMERA BODY COLOR:A9N
17-18	83940-54P11-ZZD	GARNISH, BK DR LICENSE (BLUE)	1	W/BACK CAMERA BODY COLOR:DBF
17-19	83940-54P11-ZZE	GARNISH, BK DR LICENSE (YELLOW)	1	W/BACK CAMERA BODY COLOR:DBG,DBH
17-20	83940-54P11-26U	GARNISH, BK DR LICENSE (WHITE)	1	W/BACK CAMERA
18	71812-78F00	.CLIP	6	
19	77122-60B00	.SEAL	4	
20	83942-79J00	.BRACKET, OPENING SWITCH	1	
21	83944-80J00	.PAD	1	
22	83945-54P01	.PAD, BACK DR LICENSE GARNISH	1	
23	83946-54P00	.PAD, BACK DR LICENSE GARNISH	2	
24	09119-06118	.BOLT (6X15)	2	
25	03541-0416A	.SCREW	2	
26	83950-54P02-5PK	MOLDING, BACK DR WINDOW (BLACK)	1	BODY COLOR:A6H,A9G,A9H,A9L, A9N,DBF,DBG,DBH
27	83990-86R00	DAMPER, DYNAMIC	1	K10C
28	08361-1506A	NUT	3	K10C
29	84515-65D00	FEMALE, GLASS FASTENER NO.2	2	
30	09250-20023	CAP (OD:25.8)	1	
31	08316-1006A	NUT	4	
32-1	84570-54P01	GLASS, BK DR WINDOW	1	W/GREEN GLASS
32-2	84570-54P11	GLASS, BK DR WINDOW	1	W/GRAY GLASS
33	84513-76F00	.MALE, GLASS FASTENER NO.2	2	
34	84572-71L00	.SPACER, WINDSHIELD GLASS	2	

FIG.805A

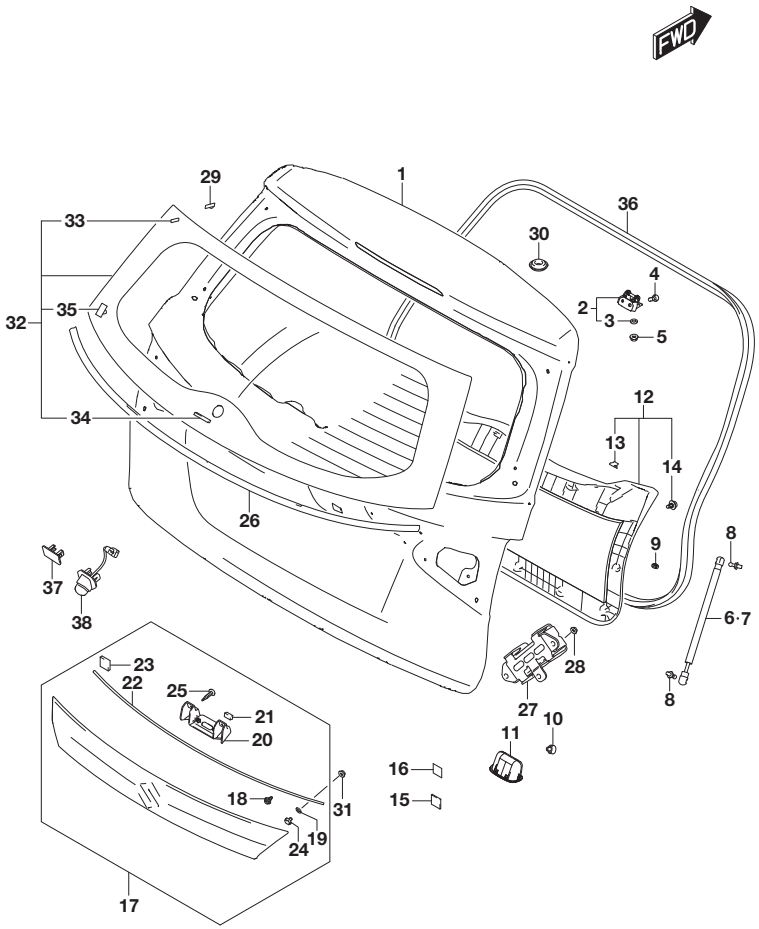

FIG.805A (4-B-10) BACK DOOR PANEL (N/PUSH START)

REF NO.	PART NO.	DESCRIPTION	Q'TY	REMARKS
35	84575-54P00	.CLIP, GLASS FASTENER	2	
36	84681-61M15	WEATHERSTRIP, BACK DR OPNG	1	
37	39977-61M00	CAP, BACK CAMERA	1	N/BACK CAMERA
38	39970-54P01	CAMERA ASSY, BACK	1	W/BACK CAMERA

FIG.805B

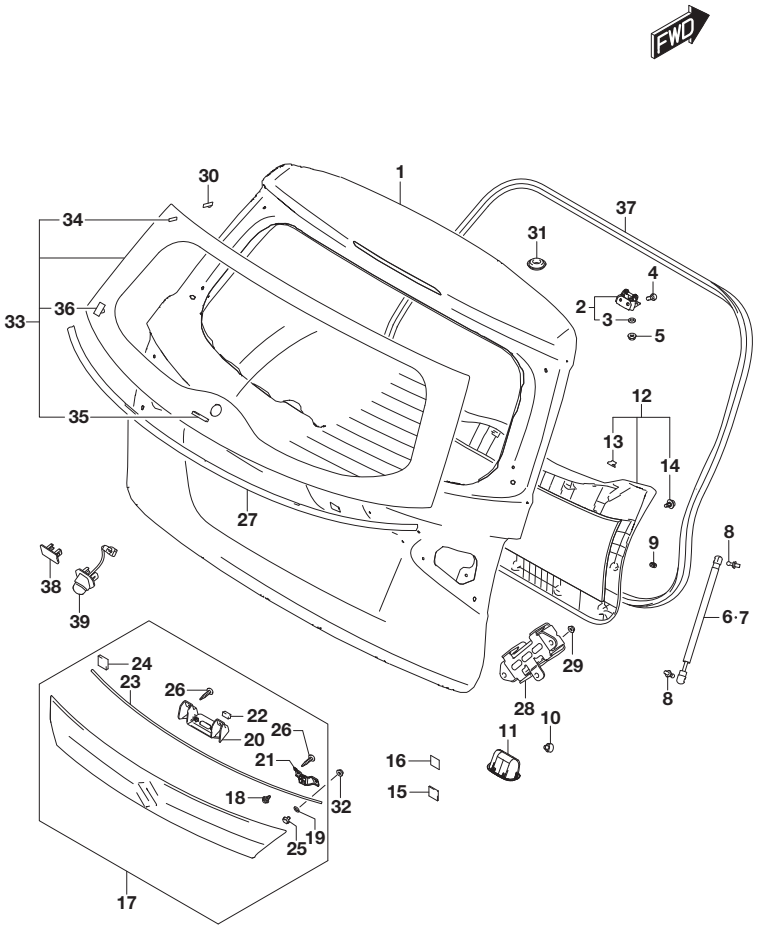

FIG.805B (4-B-11) BACK DOOR PANEL (W/PUSH START)

REF NO.	PART NO.	DESCRIPTION	Q'TY	REMARKS
1-1	69100-86R00	PANEL ASSY, BK DR	1	K10C
1-2	69100-54P01	PANEL ASSY, BK DR	1	K14C,K14D
2	69510-68L01	HINGE, BACK DR	2	
3	69571-76G00	.PACKING, BACK DR HNG	2	
4	09111-06086	BOLT (6X12)	4	
5	08361-2508A	NUT	2	
6-1	81850-86RV0	BALANCER, BK DR RH	1	K10C
6-2	81850-54P02	BALANCER, BK DR RH	1	K14C,K14D
7-1	81860-86RV0	BALANCER, BK DR LH	1	K10C
7-2	81860-54P02	BALANCER, BK DR LH	1	K14C,K14D
8	81871-54P00	BALLSTUD, BACK DR BALANCER	4	
9	82683-80E22	CUSHION, BACK DR SIDE	2	
10	82684-72M00	CUSHION	2	
11	82841-82G02	HANDLE, BACK DR INNER	1	
12	83770-86R00-5PK	TRIM, BACK DR (BLACK)	1	
13	09409-07335	.CLIP	1	
14	09409-10312	.CLIP	15	
15	63191-25C00	CUSHION (30X40)	3	
16	77151-82000	FILM	2	
17-1	83940-54P21-ZCC	GARNISH, BK DR LICENSE (SILVER)	1	N/BACK CAMERA
17-2	83940-54P21-ZCD	GARNISH, BK DR LICENSE (GRAY)	1	N/BACK CAMERA BODY COLOR:A9G,ZCD
17-3	83940-54P21-ZCE	GARNISH, BK DR LICENSE (BLACK)	1	N/BACK CAMERA
17-4	83940-54P21-ZCF	GARNISH, BK DR LICENSE (RED)	1	N/BACK CAMERA BODY COLOR:A9H,ZCF
17-5	83940-54P21-ZNL	GARNISH, BK DR LICENSE (WHITE)	1	N/BACK CAMERA
17-6	83940-54P21-ZQN	GARNISH, BK DR LICENSE (TURQUOISE)	1	N/BACK CAMERA BODY COLOR:A6H,A9L,ZQN
17-7	83940-54P21-ZQQ	GARNISH, BK DR LICENSE (IVORY)	1	N/BACK CAMERA BODY COLOR:A9N
17-8	83940-54P21-ZZD	GARNISH, BK DR LICENSE (BLUE)	1	N/BACK CAMERA BODY COLOR:DBF
17-9	83940-54P21-ZZE	GARNISH, BK DR LICENSE (YELLOW)	1	N/BACK CAMERA BODY COLOR:DBG,DBH
17-10	83940-54P21-26U	GARNISH, BK DR LICENSE (WHITE)	1	N/BACK CAMERA

FIG.805B

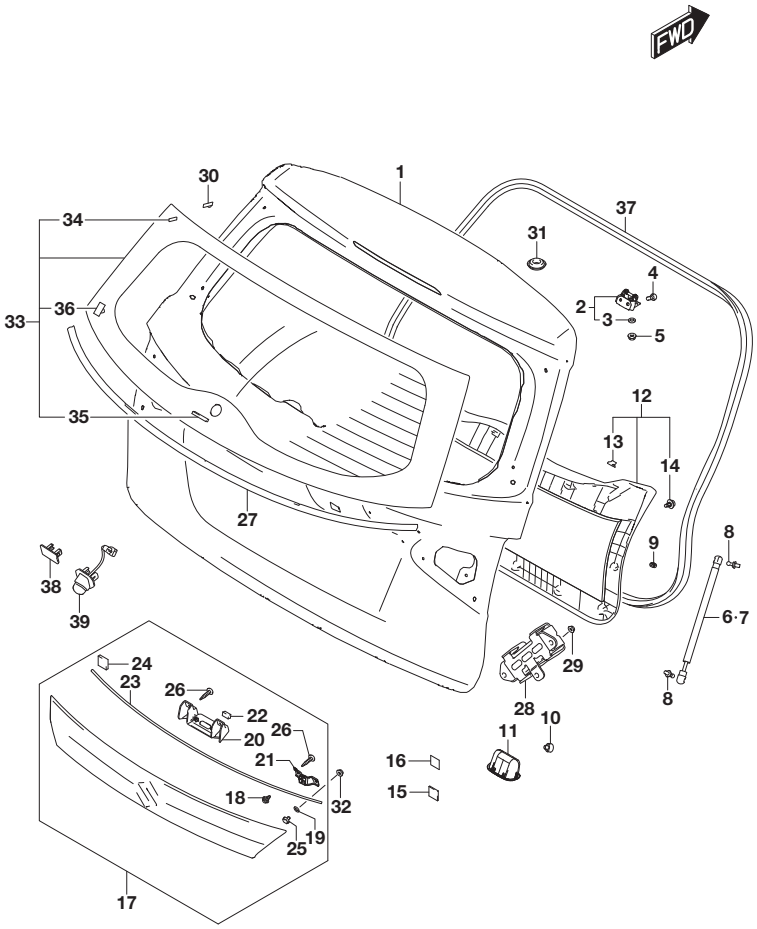

FIG.805B (4-B-12) BACK DOOR PANEL (W/PUSH START)

REF NO.	PART NO.	DESCRIPTION	Q'TY	REMARKS
17-11	83940-54P31-ZCC	GARNISH, BK DR LICENSE (SILVER)	1	W/BACK CAMERA
17-12	83940-54P31-ZCD	GARNISH, BK DR LICENSE (GRAY)	1	W/BACK CAMERA BODY COLOR:A9G,ZCD
17-13	83940-54P31-ZCE	GARNISH, BK DR LICENSE (BLACK)	1	W/BACK CAMERA
17-14	83940-54P31-ZCF	GARNISH, BK DR LICENSE (RED)	1	W/BACK CAMERA BODY COLOR:A9H,ZCF
17-15	83940-54P31-ZNL	GARNISH, BK DR LICENSE (WHITE)	1	W/BACK CAMERA
17-16	83940-54P31-ZQN	GARNISH, BK DR LICENSE (TURQUOISE)	1	W/BACK CAMERA BODY COLOR:A6H,A9L,ZQN
17-17	83940-54P31-ZQQ	GARNISH, BK DR LICENSE (IVORY)	1	W/BACK CAMERA BODY COLOR:A9N
17-18	83940-54P31-ZZD	GARNISH, BK DR LICENSE (BLUE)	1	W/BACK CAMERA BODY COLOR:DBF
17-19	83940-54P31-ZZE	GARNISH, BK DR LICENSE (YELLOW)	1	W/BACK CAMERA BODY COLOR:DBG,DBH
17-20	83940-54P31-26U	GARNISH, BK DR LICENSE (WHITE)	1	W/BACK CAMERA
18	71812-78F00	.CLIP	6	
19	77122-60B00	.SEAL	4	
20	83942-79J00	.BRACKET, OPENING SWITCH	1	
21	83943-61M02	.BRACKET, KLS SWITCH	1	
22	83944-80J00	.PAD	1	
23	83945-54P01	.PAD, BACK DR LICENSE GARNISH	1	
24	83946-54P00	.PAD, BACK DR LICENSE GARNISH	2	
25	09119-06118	.BOLT (6X15)	2	
26	03541-0416A	.SCREW	4	
27	83950-54P02-5PK	MOLDING, BACK DR WINDOW (BLACK)	1	BODY COLOR:A6H,A9G,A9H,A9L, A9N,DBF,DBG,DBH
28	83990-86R00	DAMPER, DYNAMIC	1	K10C
29	08361-1506A	NUT	3	K10C
30	84515-65D00	FEMALE, GLASS FASTENER NO.2	2	
31	09250-20023	CAP (OD:25.8)	1	
32	08316-1006A	NUT	4	
33-1	84570-54P01	GLASS, BK DR WINDOW	1	W/GREEN GLASS
33-2	84570-54P11	GLASS, BK DR WINDOW	1	W/GRAY GLASS
34	84513-76F00	.MALE, GLASS FASTENER NO.2	2	

FIG.805B

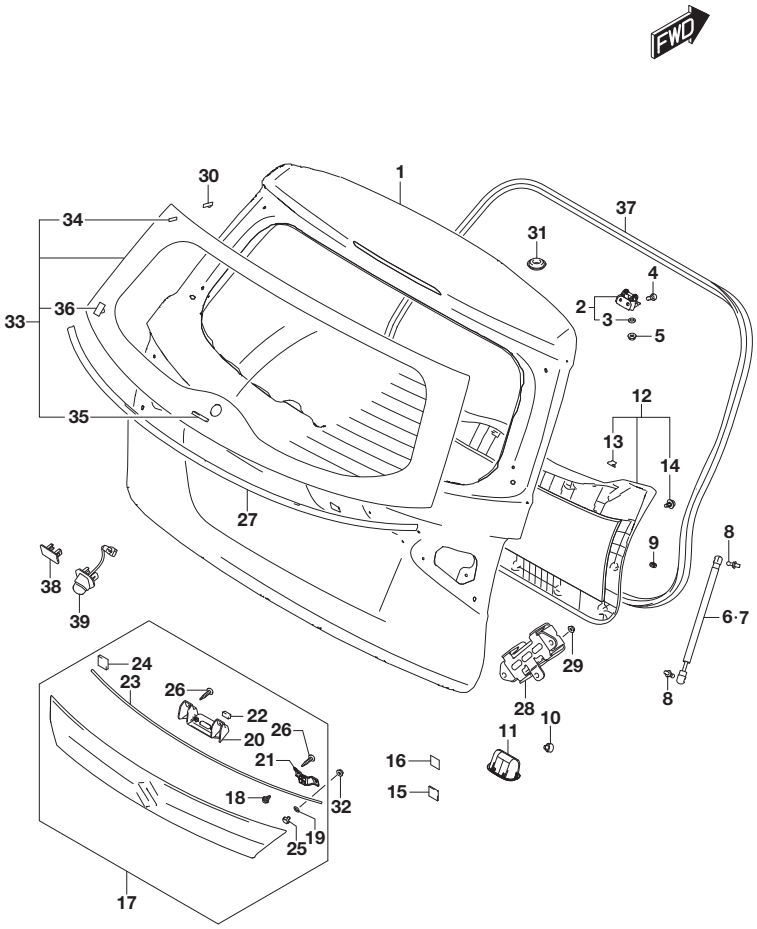

FIG.805B (4-B-13) BACK DOOR PANEL (W/PUSH START)

REF NO.	PART NO.	DESCRIPTION	Q'TY	REMARKS
35	84572-71L00	.SPACER, WINDSHIELD GLASS	2	
36	84575-54P00	.CLIP, GLASS FASTENER	2	
37	84681-61M15	WEATHERSTRIP, BACK DR OPNG	1	
38	39977-61M00	CAP, BACK CAMERA	1	N/BACK CAMERA
39	39970-54P01	CAMERA ASSY, BACK	1	W/BACK CAMERA

FIG.810A

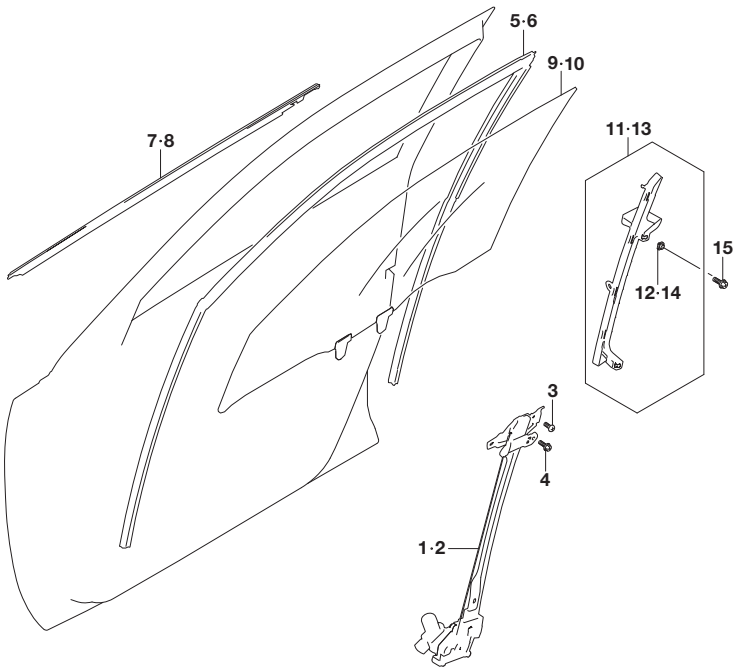

FIG.810A (4-B-14) FRONT DOOR REGULATOR

REF NO.	PART NO.	DESCRIPTION	Q'TY	REMARKS
1-1	83401-54P02	REGULATOR ASSY, FR WINDOW RH	1	LHD
1-2	83401-54P12	REGULATOR ASSY, FR WINDOW RH	1	RHD
2-1	83402-54P12	REGULATOR ASSY, FR WINDOW LH	1	LHD
2-2	83402-54P02	REGULATOR ASSY, FR WINDOW LH	1	RHD
3	02112-7612A	SCREW	4	
4	02162-0612A	SCREW	10	
5	83661-54P01	RUN, FR DR GLASS RH	1	
6	83665-54P01	RUN, FR DR GLASS LH	1	
7	83811-54P00	WEATHERSTRIP, FR DR OUT RH	1	
8	83821-54P00	WEATHERSTRIP, FR DR OUT LH	1	
9	84501-54P03	GLASS, FR DR WINDOW RH	1	
10	84502-54P03	GLASS, FR DR WINDOW LH	1	
11	81730-54P01	SASH, FR DR RR LWR RH	1	
12	81632-61M00	.NUT	2	
13	81740-54P01	SASH, FR DR RR LWR LH	1	
14	81632-61M00	.NUT	2	
15	02162-0612A	SCREW	4	

FIG.811A

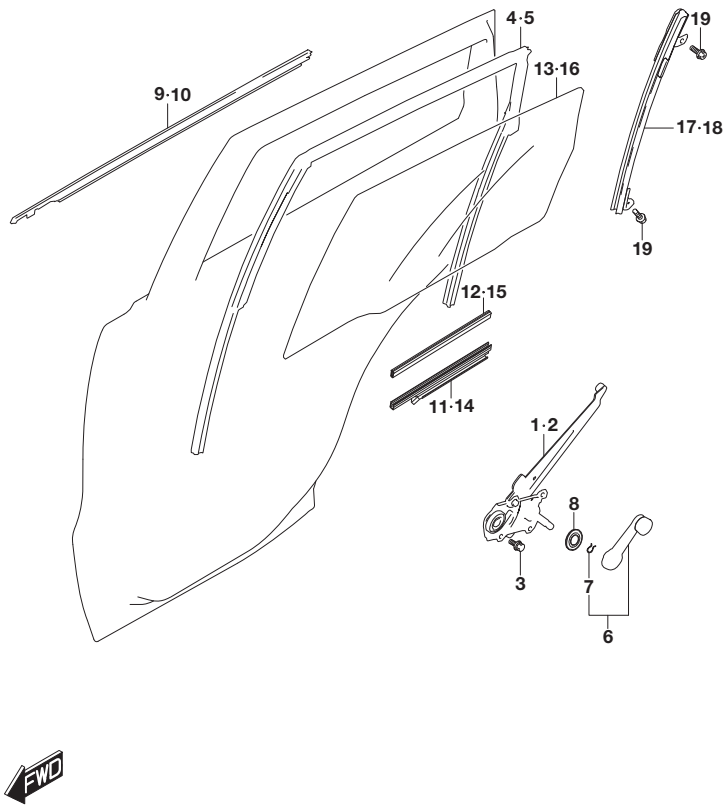

FIG.811A (4-C-2) REAR DOOR REGULATOR (W/REAR MANUAL WINDOW)

REF NO.	PART NO.	DESCRIPTION	Q'TY	REMARKS
1	83510-54P00	REGULATOR ASSY, RR WINDOW RH	1	
2	83540-54P00	REGULATOR ASSY, RR WINDOW LH	1	
3	01580-0610A	BOLT	6	
4	83671-54P02	RUN, RR DR GLASS RH	1	
5	83675-54P02	RUN, RR DR GLASS LH	1	
6	82960-83E00-5PK	HANDLE, DR WINDOW RGLTR (BLACK)	2	
7	78463-78000	.SNAP	2	
8	82972-83E00-5PK	ESCUTCHEON, WINDOW RGLTR HANDLE (BLACK)	2	
9	83831-54P00	WEATHERSTRIP, RR DR OUT RH	1	
10	83841-54P00	WEATHERSTRIP, RR DR OUT LH	1	
11	83630-79J01	CHANNEL, RR GLASS BOTTOM RH	1	
12	83691-63J00	RUBBER, RR GLASS BOTTOM CHANNEL	1	
13	84541-54P01	GLASS, RR DR WINDOW RH	1	
14	83640-79J01	CHANNEL, RR GLASS BOTTOM LH	1	
15	83691-63J00	RUBBER, RR GLASS BOTTOM CHANNEL	1	
16	84546-54P01	GLASS, RR DR WINDOW LH	1	
17	81770-54P00	SASH, RR DR RR RH	1	
18	81780-54P00	SASH, RR DR RR LH	1	
19	02162-0612A	SCREW	4	

FIG.811B

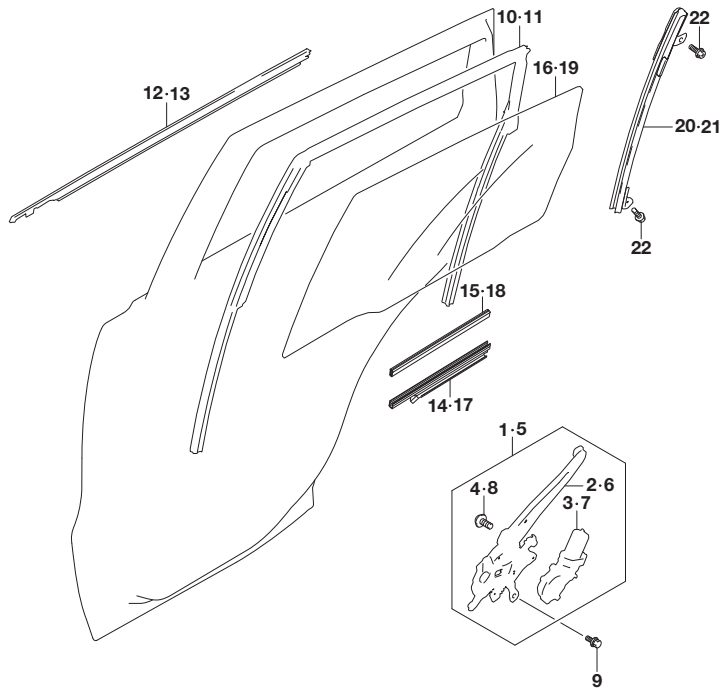

FIG.811B (4-C-3) REAR DOOR REGULATOR (W/REAR POWER WINDOW)

REF NO.	PART NO.	DESCRIPTION	Q'TY	REMARKS
1	83501-54P10	REGULATOR ASSY, RR WINDOW RH	1	
2	83510-54P10	.REGULATOR ASSY, RR WDO RH	1	
3	83530-61M00	.MOTOR ASSY, WINDOW RGLTR RH	1	
4	09139-05063	.SCREW (5X11)	3	
5	83502-54P10	REGULATOR ASSY, RR WINDOW LH	1	
6	83540-54P10	.REGULATOR ASSY, RR WDO LH	1	
7	83560-61M00	.MOTOR ASSY, WINDOW RGLTR LH	1	
8	09139-05063	.SCREW (5X11)	3	
9	01580-0610A	BOLT	4	
10	83671-54P02	RUN, RR DR GLASS RH	1	
11	83675-54P02	RUN, RR DR GLASS LH	1	
12	83831-54P00	WEATHERSTRIP, RR DR OUT RH	1	
13	83841-54P00	WEATHERSTRIP, RR DR OUT LH	1	
14	83630-79J01	CHANNEL, RR GLASS BOTTOM RH	1	
15	83691-63J00	RUBBER, RR GLASS BOTTOM CHANNEL	1	
16-1	84541-54P01	GLASS, RR DR WINDOW RH	1	W/GREEN GLASS
16-2	84541-54P11	GLASS, RR DR WINDOW RH	1	W/GRAY GLASS
17	83640-79J01	CHANNEL, RR GLASS BOTTOM LH	1	
18	83691-63J00	RUBBER, RR GLASS BOTTOM CHANNEL	1	
19-1	84546-54P01	GLASS, RR DR WINDOW LH	1	W/GREEN GLASS
19-2	84546-54P11	GLASS, RR DR WINDOW LH	1	W/GRAY GLASS
20	81770-54P00	SASH, RR DR RR RH	1	
21	81780-54P00	SASH, RR DR RR LH	1	
22	02162-0612A	SCREW	4	

FIG.820A

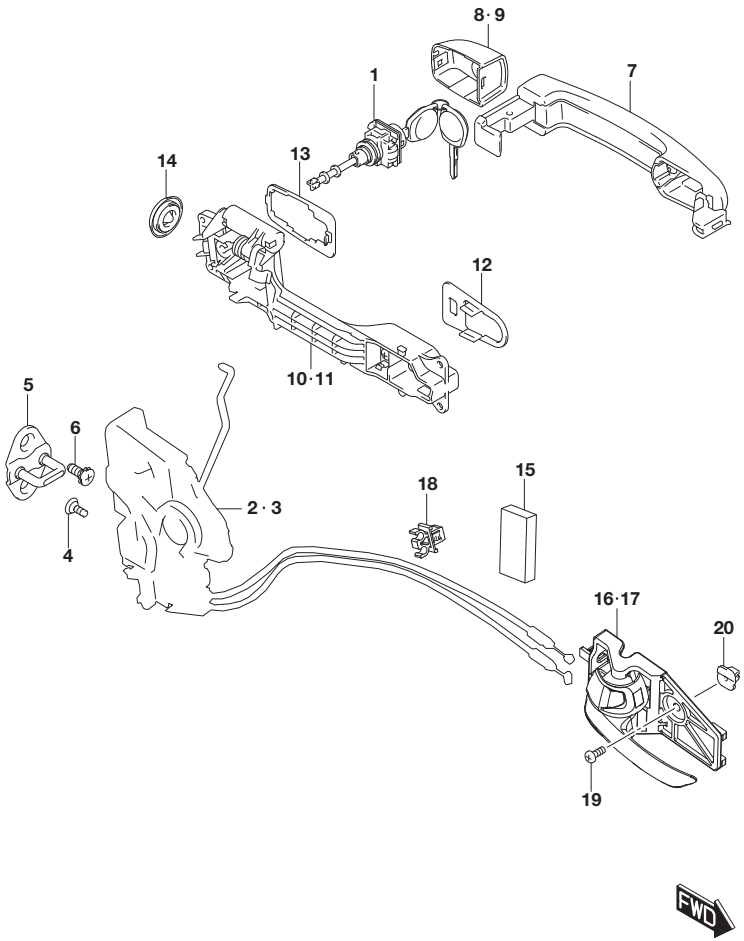

FIG.820A (4-C-4) FRONT DOOR LOCK (LHD:N/PUSH START)

REF NO.	PART NO.	DESCRIPTION	Q'TY	REMARKS
1	82280-54841	CYLINDER SET, FR DR LATCH LH	1	
2	82201-54P21	LATCH ASSY, FR DR RH	1	
3	82202-54P01	LATCH ASSY, FR DR LH	1	
4	09137-06032	SCREW (6X18)	6	
5	82610-54P00	STRIKER, DR LATCH	2	
6	09139-08025	SCREW (8X20)	4	
7-1	82812-63J00-5PK	HANDLE, SIDE DR OUT (BLACK)	2	N/PAINTING
7-2	82812-57LA0-ZCC	HANDLE, SIDE DR OUT (SILVER)	2	W/PAINTING
7-3	82812-57LA0-ZCD	HANDLE, SIDE DR OUT (GRAY)	2	W/PAINTING BODY COLOR:A9G,ZCD
7-4	82812-57LA0-ZCE	HANDLE, SIDE DR OUT (BLACK)	2	W/PAINTING
7-5	82812-57LA0-ZCF	HANDLE, SIDE DR OUT (RED)	2	W/PAINTING BODY COLOR:A9H,ZCF
7-6	82812-57LA0-ZNL	HANDLE, SIDE DR OUT (WHITE)	2	W/PAINTING
7-7	82812-57LA0-ZQN	HANDLE, SIDE DR OUT (TURQUOISE)	2	W/PAINTING BODY COLOR:A6H,A9L,ZQN
7-8	82812-57LA0-ZQQ	HANDLE, SIDE DR OUT (IVORY)	2	W/PAINTING BODY COLOR:A9N
7-9	82812-57LA0-ZZD	HANDLE, SIDE DR OUT (BLUE)	2	W/PAINTING BODY COLOR:DBF
7-10	82812-57LA0-ZZE	HANDLE, SIDE DR OUT (YELLOW)	2	W/PAINTING BODY COLOR:DBG,DBH
7-11	82812-57LA0-26U	HANDLE, SIDE DR OUT (WHITE)	2	W/PAINTING

FIG.820B(4-C-7) FRONT DOOR LOCK (LHD:W/PUSH START)
FIG.820C(4-C-9) FRONT DOOR LOCK (RHD:N/PUSH START)
FIG.820D(4-C-12) FRONT DOOR LOCK (RHD:W/PUSH START)

FIG.820A

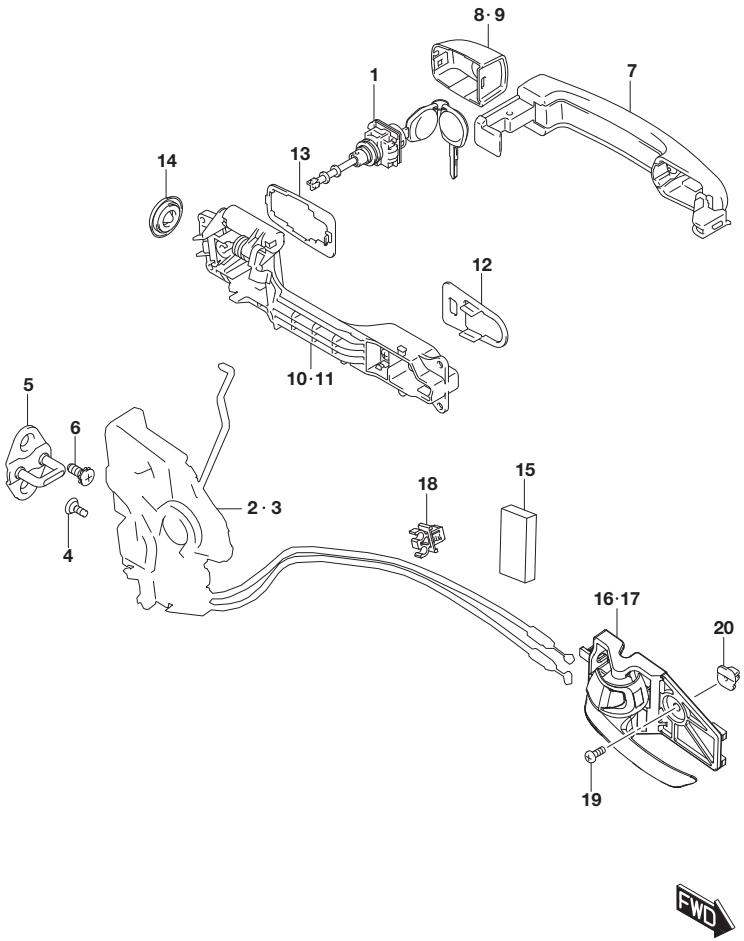

FIG.820A (4-C-5) FRONT DOOR LOCK (LHD:N/PUSH START)

REF NO.	PART NO.	DESCRIPTION	Q'TY	REMARKS
8-1	82813-63J10-5PK	CAP, FR DR OUT RH (BLACK)	1	N/PAINTING
8-2	82813-57L10-ZCC	CAP, FR DR OUT RH (SILVER)	1	W/PAINTING
8-3	82813-57L10-ZCD	CAP, FR DR OUT RH (GRAY)	1	W/PAINTING
				BODY COLOR:A9G,ZCD
8-4	82813-57L10-ZCE	CAP, FR DR OUT RH (BLACK)	1	W/PAINTING
8-5	82813-57L10-ZCF	CAP, FR DR OUT RH (RED)	1	W/PAINTING
				BODY COLOR:A9H,ZCF
8-6	82813-57L10-ZNL	CAP, FR DR OUT RH (WHITE)	1	W/PAINTING
8-7	82813-57L10-ZQN	CAP, FR DR OUT RH (TURQUOISE)	1	W/PAINTING
				BODY COLOR:A6H,A9L,ZQN
8-8	82813-57L10-ZQQ	CAP, FR DR OUT RH (IVORY)	1	W/PAINTING
				BODY COLOR:A9N
8-9	82813-57L10-ZZD	CAP, FR DR OUT RH (BLUE)	1	W/PAINTING
				BODY COLOR:DBF
8-10	82813-57L10-ZZE	CAP, FR DR OUT RH (YELLOW)	1	W/PAINTING
				BODY COLOR:DBG,DBH
8-11	82813-57L10-26U	CAP, FR DR OUT RH (WHITE)	1	W/PAINTING
9-1	82813-63J00-5PK	CAP, FR DR OUT LH (BLACK)	1	N/PAINTING
9-2	82813-57L00-ZCC	CAP, FR DR OUT LH (SILVER)	1	W/PAINTING
9-3	82813-57L00-ZCD	CAP, FR DR OUT LH (GRAY)	1	W/PAINTING
				BODY COLOR:A9G,ZCD
9-4	82813-57L00-ZCE	CAP, FR DR OUT LH (BLACK)	1	W/PAINTING
9-5	82813-57L00-ZCF	CAP, FR DR OUT LH (RED)	1	W/PAINTING
				BODY COLOR:A9H,ZCF
9-6	82813-57L00-ZNL	CAP, FR DR OUT LH (WHITE)	1	W/PAINTING
9-7	82813-57L00-ZQN	CAP, FR DR OUT LH (TURQUOISE)	1	W/PAINTING
				BODY COLOR:A6H,A9L,ZQN
9-8	82813-57L00-ZQQ	CAP, FR DR OUT LH (IVORY)	1	W/PAINTING
				BODY COLOR:A9N
9-9	82813-57L00-ZZD	CAP, FR DR OUT LH (BLUE)	1	W/PAINTING
				BODY COLOR:DBF
9-10	82813-57L00-ZZE	CAP, FR DR OUT LH (YELLOW)	1	W/PAINTING
				BODY COLOR:DBG,DBH
9-11	82813-57L00-26U	CAP, FR DR OUT LH (WHITE)	1	W/PAINTING
10	82811-63J00	FRAME, FR DR OUT RH	1	
11	82821-63J00	FRAME, FR DR OUT LH	1	

FIG.820A

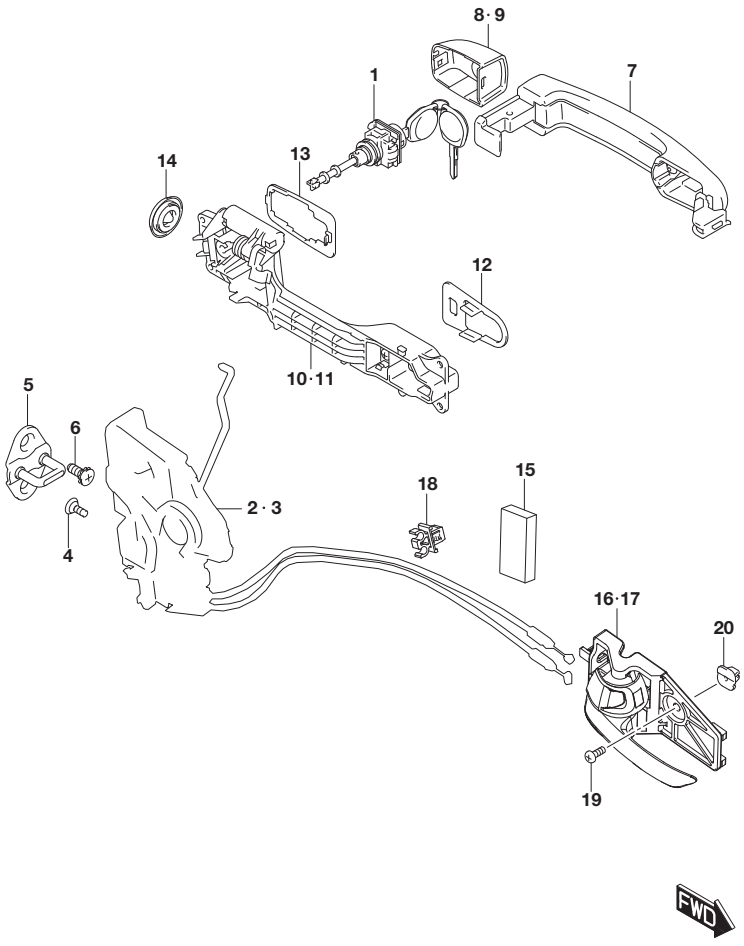

FIG.820A (4-C-6) FRONT DOOR LOCK (LHD:N/PUSH START)

REF NO.	PART NO.	DESCRIPTION	Q'TY	REMARKS
12	82814-63J00	PAD, FR DR OUT	2	
13	82815-63J00	CUSHION, SIDE DR OUT	2	
14	09250-25007	CAP (OD:25)	2	
15	77591-75000	PAD	2	
16-1	83110-61M00-5PK	HANDLE, DR INSIDE RH (BLACK)	1	
16-2	83110-61M10-C48	HANDLE, DR INSIDE RH (CHROME/BLACK)	1	
17-1	83130-61M00-5PK	HANDLE, DR INSIDE LH (BLACK)	1	
17-2	83130-61M10-C48	HANDLE, DR INSIDE LH (CHROME/BLACK)	1	
18	83271-71L00	CLIP, DR INSIDE HANDLE CABLE	2	
19	09132-05058	SCREW (5X12)	2	
20	09148-05031	NUT	2	

FIG.820B

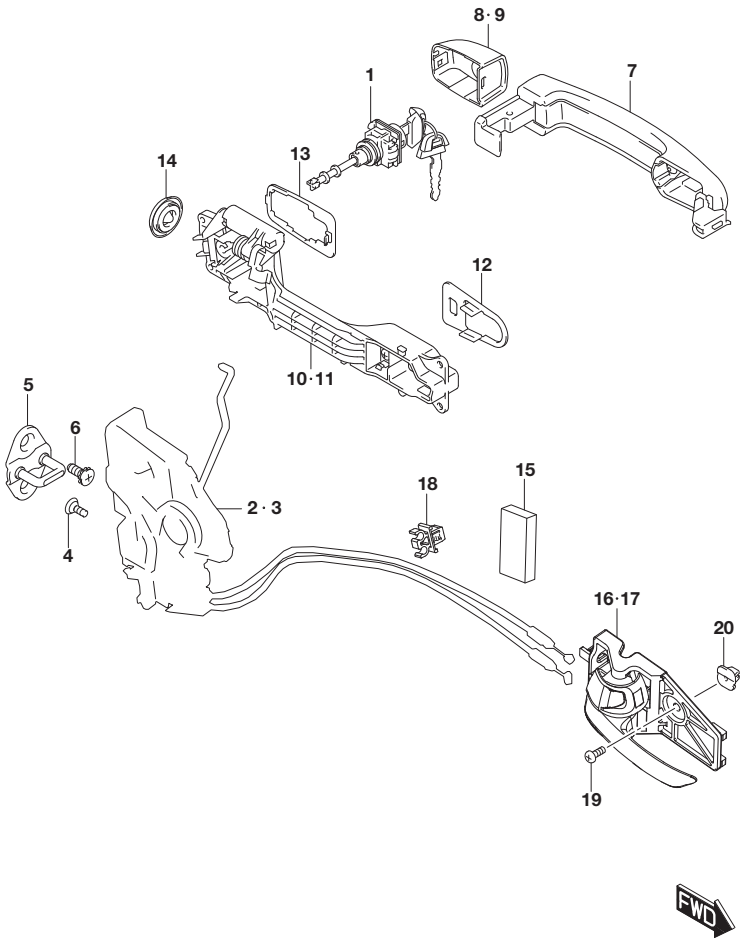

FIG.820B (4-C-7) FRONT DOOR LOCK (LHD:W/PUSH START)

REF NO.	PART NO.	DESCRIPTION	Q'TY	REMARKS
1	82280-54850	CYLINDER SET, FR DR LATCH LH	1	
2	82201-54P31	LATCH ASSY, FR DR RH	1	
3	82202-54P11	LATCH ASSY, FR DR LH	1	
4	09137-06032	SCREW (6X18)	6	
5	82610-54P00	STRIKER, DR LATCH	2	
6	09139-08025	SCREW (8X20)	4	
7-1	82810-57830-ZCC	HANDLE SET, SIDE DR OUT (SILVER)	2	
7-2	82810-57830-ZCD	HANDLE SET, SIDE DR OUT (GRAY)	2	BODY COLOR:A9G,ZCD
7-3	82810-57830-ZCE	HANDLE SET, SIDE DR OUT (BLACK)	2	
7-4	82810-57830-ZCF	HANDLE SET, SIDE DR OUT (RED)	2	BODY COLOR:A9H,ZCF
7-5	82810-57830-ZNL	HANDLE SET, SIDE DR OUT (WHITE)	2	
7-6	82810-57830-ZQN	HANDLE SET, SIDE DR OUT (TURQUOISE)	2	BODY COLOR:A6H,A9L,ZQN
7-7	82810-57830-ZQQ	HANDLE SET, SIDE DR OUT (IVORY)	2	BODY COLOR:A9N
7-8	82810-57830-ZZD	HANDLE SET, SIDE DR OUT (BLUE)	2	BODY COLOR:DBF
7-9	82810-57830-ZZE	HANDLE SET, SIDE DR OUT (YELLOW)	2	BODY COLOR:DBG,DBH
7-10	82810-57830-26U	HANDLE SET, SIDE DR OUT (WHITE)	2	
8-1	82813-57L10-ZCC	CAP, FR DR OUT RH (SILVER)	1	
8-2	82813-57L10-ZCD	CAP, FR DR OUT RH (GRAY)	1	BODY COLOR:A9G,ZCD
8-3	82813-57L10-ZCE	CAP, FR DR OUT RH (BLACK)	1	
8-4	82813-57L10-ZCF	CAP, FR DR OUT RH (RED)	1	BODY COLOR:A9H,ZCF
8-5	82813-57L10-ZNL	CAP, FR DR OUT RH (WHITE)	1	
8-6	82813-57L10-ZQN	CAP, FR DR OUT RH (TURQUOISE)	1	BODY COLOR:A6H,A9L,ZQN
8-7	82813-57L10-ZQQ	CAP, FR DR OUT RH (IVORY)	1	BODY COLOR:A9N
8-8	82813-57L10-ZZD	CAP, FR DR OUT RH (BLUE)	1	BODY COLOR:DBF
8-9	82813-57L10-ZZE	CAP, FR DR OUT RH (YELLOW)	1	BODY COLOR:DBG,DBH
8-10	82813-57L10-26U	CAP, FR DR OUT RH (WHITE)	1	

FIG.820B

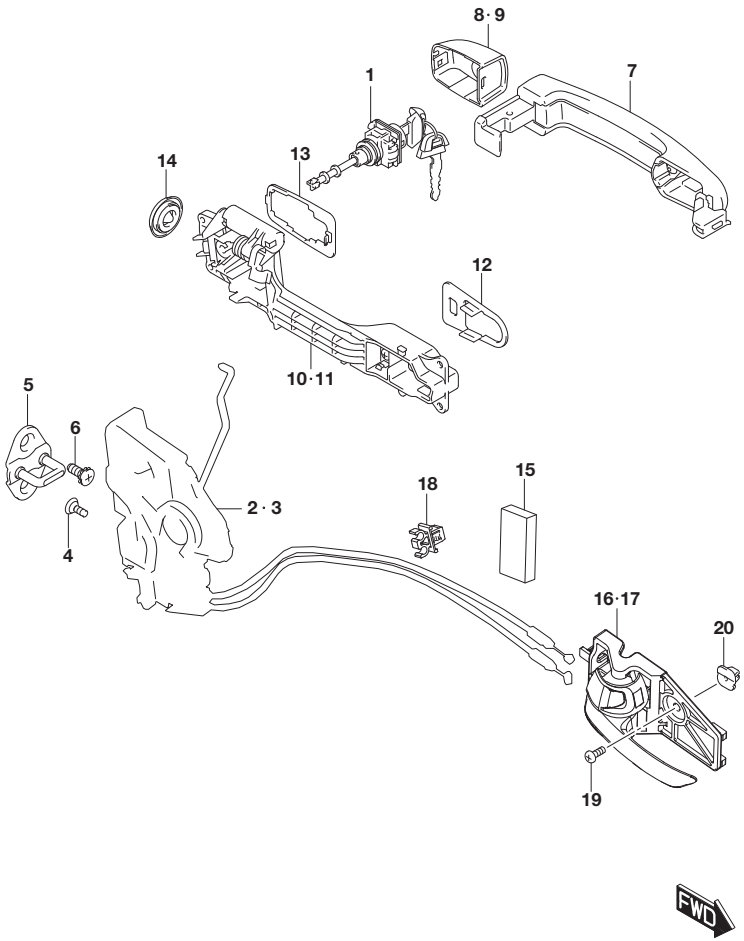

FIG.820B (4-C-8) FRONT DOOR LOCK (LHD:W/PUSH START)

REF NO.	PART NO.	DESCRIPTION	Q'TY	REMARKS
9-1	82813-57L00-ZCC	CAP, FR DR OUT LH (SILVER)	1	
9-2	82813-57L00-ZCD	CAP, FR DR OUT LH (GRAY)	1	BODY COLOR:A9G,ZCD
9-3	82813-57L00-ZCE	CAP, FR DR OUT LH (BLACK)	1	
9-4	82813-57L00-ZCF	CAP, FR DR OUT LH (RED)	1	BODY COLOR:A9H,ZCF
9-5	82813-57L00-ZNL	CAP, FR DR OUT LH (WHITE)	1	
9-6	82813-57L00-ZQN	CAP, FR DR OUT LH (TURQUOISE)	1	BODY COLOR:A6H,A9L,ZQN
9-7	82813-57L00-ZQQ	CAP, FR DR OUT LH (IVORY)	1	BODY COLOR:A9N
9-8	82813-57L00-ZZD	CAP, FR DR OUT LH (BLUE)	1	BODY COLOR:DBF
9-9	82813-57L00-ZZE	CAP, FR DR OUT LH (YELLOW)	1	BODY COLOR:DBG,DBH
9-10	82813-57L00-26U	CAP, FR DR OUT LH (WHITE)	1	
10	82811-63J10	FRAME, FR DOOR OUT RH	1	
11	82821-63J10	FRAME, FR DR OUT LH	1	
12	82814-63J00	PAD, FR DR OUT	2	
13	82815-63J00	CUSHION, SIDE DR OUT	2	
14	09250-25007	CAP (OD:25)	2	
15	77591-75000	PAD	2	
16	83110-61M10-C48	HANDLE, SIDE DOOR INSIDE RH (CHROME/BLACK)	1	
17	83130-61M10-C48	HANDLE, SIDE DOOR INSIDE LH (CHROME/BLACK)	1	
18	83271-71L00	CLIP, DR INSIDE HANDLE CABLE	2	
19	09132-05058	SCREW (5X12)	2	
20	09148-05031	NUT	2	

FIG.820C

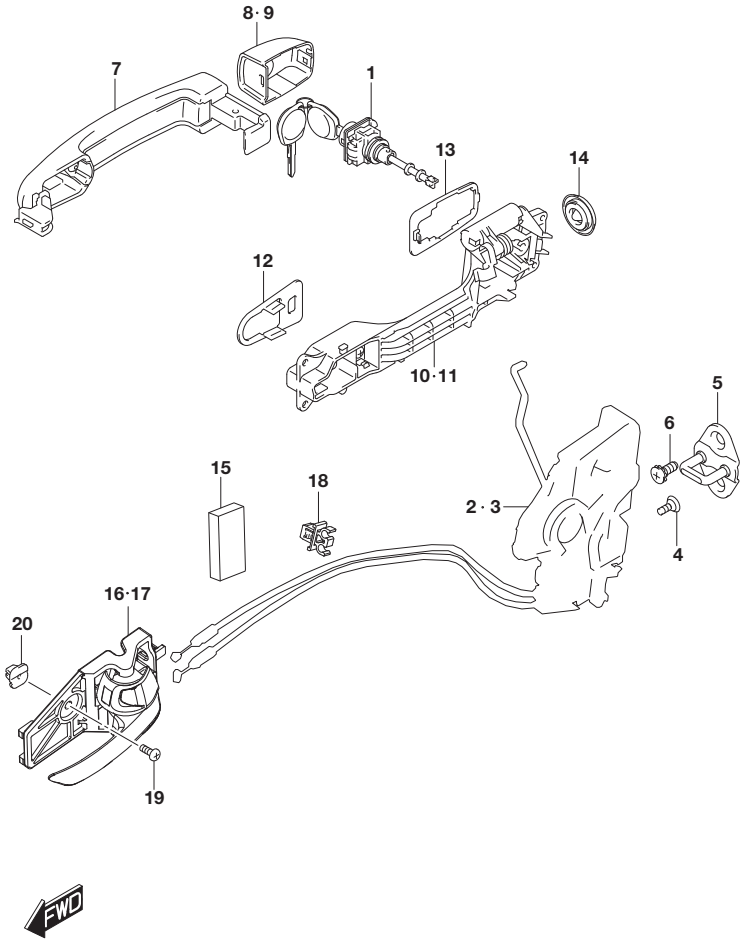

FIG.820C (4-C-9) FRONT DOOR LOCK (RHD:N/PUSH START)

REF NO.	PART NO.	DESCRIPTION	Q'TY	REMARKS
1	82270-54861	CYLINDER SET, FR DR LATCH RH	1	
2	82201-54PA3	LATCH ASSY, FR DR RH	1	
3	82202-54PB3	LATCH ASSY, FR DR LH	1	
4	09137-06032	SCREW (6X18)	6	
5	82610-54P00	STRIKER, DR LATCH	2	
6	09139-08025	SCREW (8X20)	4	
7-1	82812-63J00-5PK	HANDLE, SIDE DOOR OUT (BLACK)	2	N/PAINTING
7-2	82812-57LA0-ZCC	HANDLE, SIDE DOOR OUT (SILVER)	2	W/PAINTING
7-3	82812-57LA0-ZCD	HANDLE, SIDE DOOR OUT (GRAY)	2	W/PAINTING BODY COLOR:A9G,ZCD
7-4	82812-57LA0-ZCE	HANDLE, SIDE DOOR OUT (BLACK)	2	W/PAINTING
7-5	82812-57LA0-ZCF	HANDLE, SIDE DOOR OUT (RED)	2	W/PAINTING BODY COLOR:A9H,ZCF
7-6	82812-57LA0-ZNL	HANDLE, SIDE DOOR OUT (WHITE)	2	W/PAINTING
7-7	82812-57LA0-ZQN	HANDLE, SIDE DOOR OUT (TURQUOISE)	2	W/PAINTING BODY COLOR:A6H,A9L,ZQN
7-8	82812-57LA0-ZQQ	HANDLE, SIDE DOOR OUT (IVORY)	2	W/PAINTING BODY COLOR:A9N
7-9	82812-57LA0-ZZD	HANDLE, SIDE DOOR OUT (BLUE)	2	W/PAINTING BODY COLOR:DBF
7-10	82812-57LA0-ZZE	HANDLE, SIDE DOOR OUT (YELLOW)	2	W/PAINTING BODY COLOR:DBG,DBH
7-11	82812-57LA0-26U	HANDLE, SIDE DOOR OUT (WHITE)	2	W/PAINTING
8-1	82813-63J00-5PK	CAP, FR DR OUT RH (BLACK)	1	N/PAINTING
8-2	82813-57L00-ZCC	CAP, FR DR OUT RH (SILVER)	1	W/PAINTING
8-3	82813-57L00-ZCD	CAP, FR DR OUT RH (GRAY)	1	W/PAINTING BODY COLOR:A9G,ZCD
8-4	82813-57L00-ZCE	CAP, FR DR OUT RH (BLACK)	1	W/PAINTING
8-5	82813-57L00-ZCF	CAP, FR DR OUT RH (RED)	1	W/PAINTING BODY COLOR:A9H,ZCF
8-6	82813-57L00-ZNL	CAP, FR DR OUT RH (WHITE)	1	W/PAINTING
8-7	82813-57L00-ZQN	CAP, FR DR OUT RH (TURQUOISE)	1	W/PAINTING BODY COLOR:A6H,A9L,ZQN
8-8	82813-57L00-ZQQ	CAP, FR DR OUT RH (IVORY)	1	W/PAINTING BODY COLOR:A9N

FIG.820C

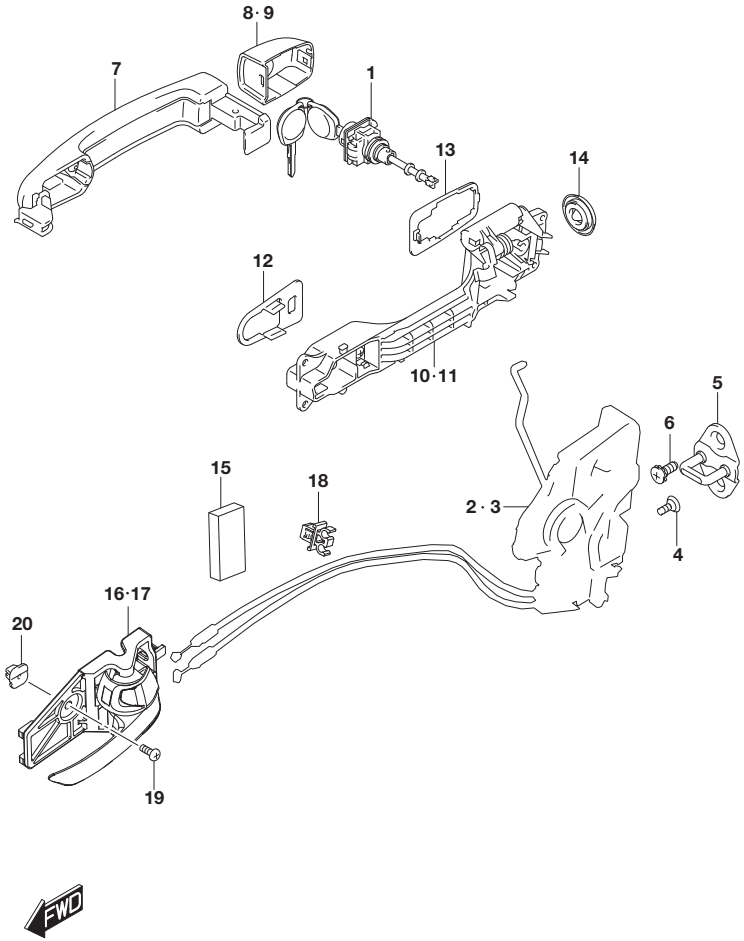

FIG.820C (4-C-10) FRONT DOOR LOCK (RHD:N/PUSH START)

REF NO.	PART NO.	DESCRIPTION	Q'TY	REMARKS
8-9	82813-57L00-ZZD	CAP, FR DR OUT RH (BLUE)	1	W/PAINTING BODY COLOR:DBF
8-10	82813-57L00-ZZE	CAP, FR DR OUT RH (YELLOW)	1	W/PAINTING BODY COLOR:DBG,DBH
8-11	82813-57L00-26U	CAP, FR DR OUT RH (WHITE)	1	W/PAINTING
9-1	82813-63J10-5PK	CAP, FR DR OUT LH (BLACK)	1	N/PAINTING
9-2	82813-57L10-ZCC	CAP, FR DR OUT LH (SILVER)	1	W/PAINTING
9-3	82813-57L10-ZCD	CAP, FR DR OUT LH (GRAY)	1	W/PAINTING BODY COLOR:A9G,ZCD
9-4	82813-57L10-ZCE	CAP, FR DR OUT LH (BLACK)	1	W/PAINTING
9-5	82813-57L10-ZCF	CAP, FR DR OUT LH (RED)	1	W/PAINTING BODY COLOR:A9H,ZCF
9-6	82813-57L10-ZNL	CAP, FR DR OUT LH (WHITE)	1	W/PAINTING
9-7	82813-57L10-ZQN	CAP, FR DR OUT LH (TURQUOISE)	1	W/PAINTING BODY COLOR:A6H,A9L,ZQN
9-8	82813-57L10-ZQQ	CAP, FR DR OUT LH (IVORY)	1	W/PAINTING BODY COLOR:A9N
9-9	82813-57L10-ZZD	CAP, FR DR OUT LH (BLUE)	1	W/PAINTING BODY COLOR:DBF
9-10	82813-57L10-ZZE	CAP, FR DR OUT LH (YELLOW)	1	W/PAINTING BODY COLOR:DBG,DBH
9-11	82813-57L10-26U	CAP, FR DR OUT LH (WHITE)	1	W/PAINTING
10	82811-63J00	FRAME, FR DR OUT RH	1	
11	82821-63J00	FRAME, FR DR OUT LH	1	
12	82814-63J00	PAD, FR DR OUT	2	
13	82815-63J00	CUSHION, SIDE DR OUT	2	
14	09250-25007	CAP (OD:25)	2	
15	77591-75000	PAD	2	
16-1	83110-61M00-5PK	HANDLE, DR INSIDE RH (BLACK)	1	
16-2	83110-61M10-C48	HANDLE, DR INSIDE RH (CHROME/BLACK)	1	
17-1	83130-61M00-5PK	HANDLE, DR INSIDE LH (BLACK)	1	
17-2	83130-61M10-C48	HANDLE, DR INSIDE LH (CHROME/BLACK)	1	
18	83271-71L00	CLIP, DR INSIDE HANDLE CABLE	2	
19	09132-05058	SCREW (5X12)	2	

FIG.820C

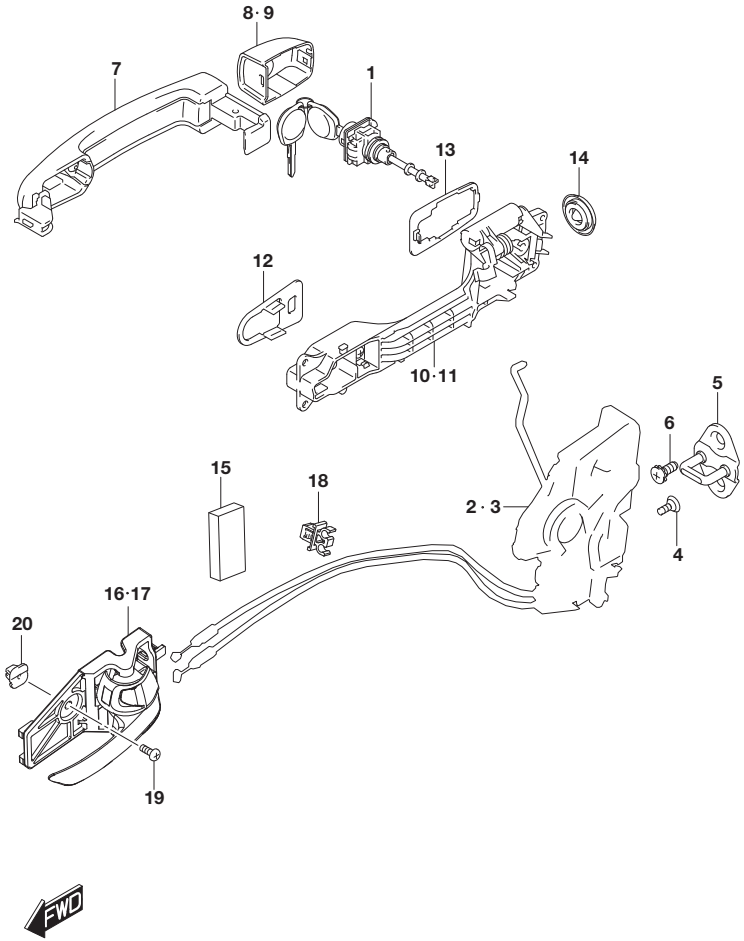

FIG.820C (4-C-11) FRONT DOOR LOCK (RHD:N/PUSH START)

REF NO.	PART NO.	DESCRIPTION	Q'TY	REMARKS
20	09148-05031	NUT	2	

FIG.820D

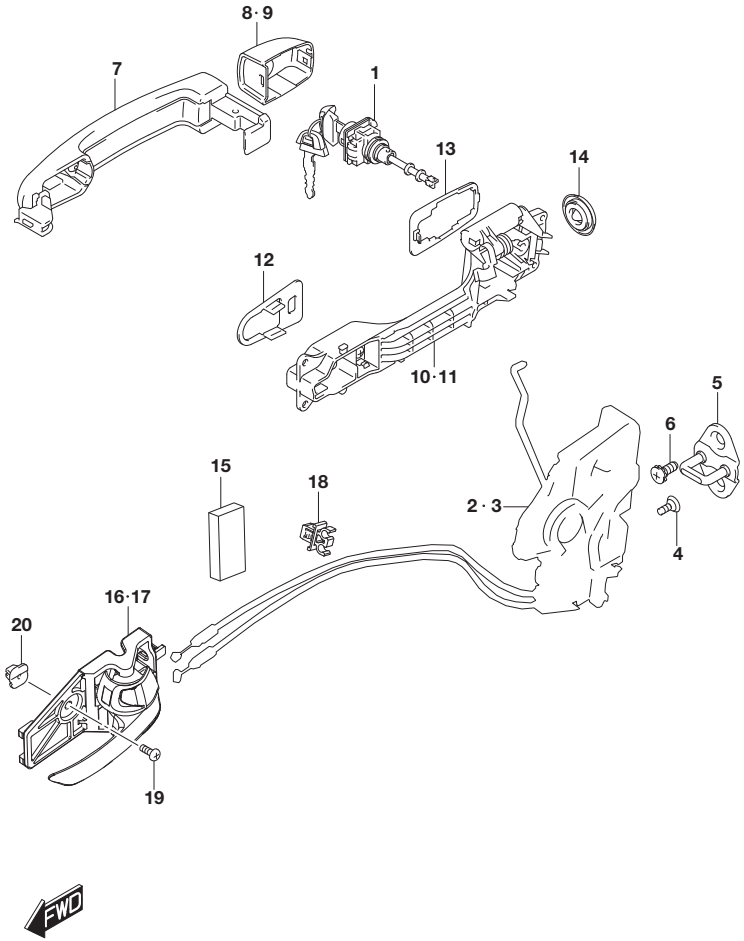

FIG.820D (4-C-12) FRONT DOOR LOCK (RHD:W/PUSH START)

REF NO.	PART NO.	DESCRIPTION	Q'TY	REMARKS
1	82270-54870	CYLINDER SET, FR DR LATCH RH	1	
2	82201-54PA3	LATCH ASSY, FR DR RH	1	
3	82202-54PB3	LATCH ASSY, FR DR LH	1	
4	09137-06032	SCREW (6X18)	6	
5	82610-54P00	STRIKER, DR LATCH	2	
6	09139-08025	SCREW (8X20)	4	
7-1	82810-57830-ZCC	HANDLE SET, SIDE DR OUT (SILVER)	2	
7-2	82810-57830-ZCD	HANDLE SET, SIDE DR OUT (GRAY)	2	BODY COLOR:A9G,ZCD
7-3	82810-57830-ZCE	HANDLE SET, SIDE DR OUT (BLACK)	2	
7-4	82810-57830-ZCF	HANDLE SET, SIDE DR OUT (RED)	2	BODY COLOR:A9H,ZCF
7-5	82810-57830-ZNL	HANDLE SET, SIDE DR OUT (WHITE)	2	
7-6	82810-57830-ZQN	HANDLE SET, SIDE DR OUT (TURQUOISE)	2	BODY COLOR:A6H,A9L,ZQN
7-7	82810-57830-ZQQ	HANDLE SET, SIDE DR OUT (IVORY)	2	BODY COLOR:A9N
7-8	82810-57830-ZZD	HANDLE SET, SIDE DR OUT (BLUE)	2	BODY COLOR:DBF
7-9	82810-57830-ZZE	HANDLE SET, SIDE DR OUT (YELLOW)	2	BODY COLOR:DBG,DBH
7-10	82810-57830-26U	HANDLE SET, SIDE DR OUT (WHITE)	2	
8-1	82813-57L00-ZCC	CAP, FR DR OUT RH (SILVER)	1	
8-2	82813-57L00-ZCD	CAP, FR DR OUT RH (GRAY)	1	BODY COLOR:A9G,ZCD
8-3	82813-57L00-ZCE	CAP, FR DR OUT RH (BLACK)	1	
8-4	82813-57L00-ZCF	CAP, FR DR OUT RH (RED)	1	BODY COLOR:A9H,ZCF
8-5	82813-57L00-ZNL	CAP, FR DR OUT RH (WHITE)	1	
8-6	82813-57L00-ZQN	CAP, FR DR OUT RH (TURQUOISE)	1	BODY COLOR:A6H,A9L,ZQN
8-7	82813-57L00-ZQQ	CAP, FR DR OUT RH (IVORY)	1	BODY COLOR:A9N
8-8	82813-57L00-ZZD	CAP, FR DR OUT RH (BLUE)	1	BODY COLOR:DBF
8-9	82813-57L00-ZZE	CAP, FR DR OUT RH (YELLOW)	1	BODY COLOR:DBG,DBH
8-10	82813-57L00-26U	CAP, FR DR OUT RH (WHITE)	1	

FIG.820D

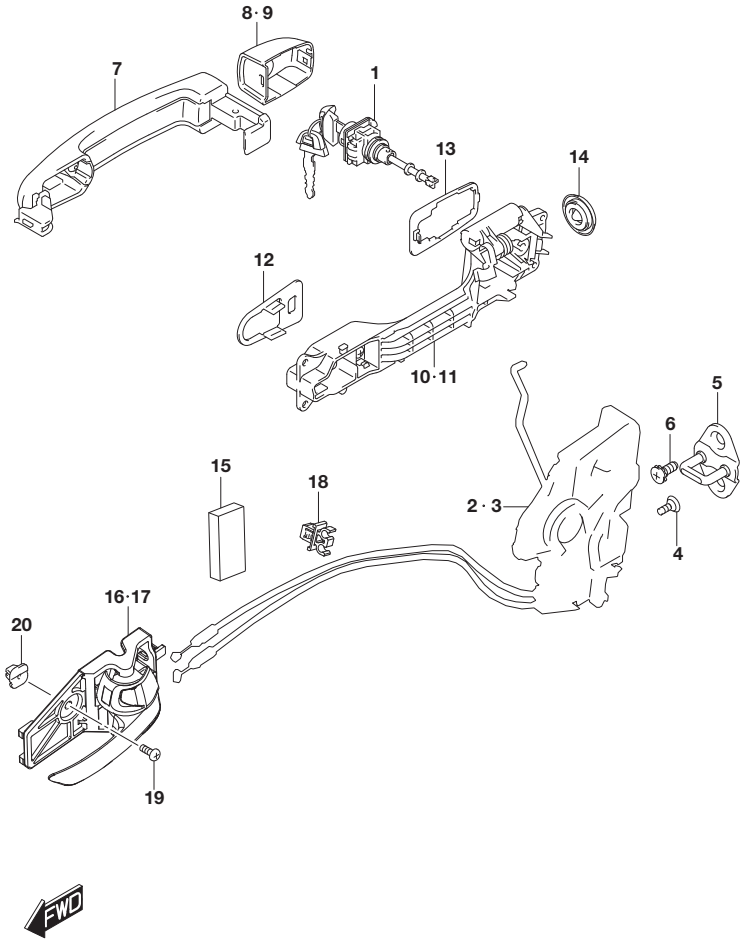

FIG.820D (4-C-13) FRONT DOOR LOCK (RHD:W/PUSH START)

REF NO.	PART NO.	DESCRIPTION	Q'TY	REMARKS
9-1	82813-57L10-ZCC	CAP, FR DR OUT LH (SILVER)	1	
9-2	82813-57L10-ZCD	CAP, FR DR OUT LH (GRAY)	1	BODY COLOR:A9G,ZCD
9-3	82813-57L10-ZCE	CAP, FR DR OUT LH (BLACK)	1	
9-4	82813-57L10-ZCF	CAP, FR DR OUT LH (RED)	1	BODY COLOR:A9H,ZCF
9-5	82813-57L10-ZNL	CAP, FR DR OUT LH (WHITE)	1	
9-6	82813-57L10-ZQN	CAP, FR DR OUT LH (TURQUOISE)	1	BODY COLOR:A6H,A9L,ZQN
9-7	82813-57L10-ZQQ	CAP, FR DR OUT LH (IVORY)	1	BODY COLOR:A9N
9-8	82813-57L10-ZZD	CAP, FR DR OUT LH (BLUE)	1	BODY COLOR:DBF
9-9	82813-57L10-ZZE	CAP, FR DR OUT LH (YELLOW)	1	BODY COLOR:DBG,DBH
9-10	82813-57L10-26U	CAP, FR DR OUT LH (WHITE)	1	
10	82811-63J10	FRAME, FR DOOR OUT RH	1	
11	82821-63J10	FRAME, FR DR OUT LH	1	
12	82814-63J00	PAD, FR DR OUT	2	
13	82815-63J00	CUSHION, SIDE DR OUT	2	
14	09250-25007	CAP (OD:25)	2	
15	77591-75000	PAD	2	
16	83110-61M10-C48	HANDLE, SIDE DOOR INSIDE RH (CHROME/BLACK)	1	
17	83130-61M10-C48	HANDLE, SIDE DOOR INSIDE LH (CHROME/BLACK)	1	
18	83271-71L00	CLIP, DR INSIDE HANDLE CABLE	2	
19	09132-05058	SCREW (5X12)	2	
20	09148-05031	NUT	2	

FIG.821A

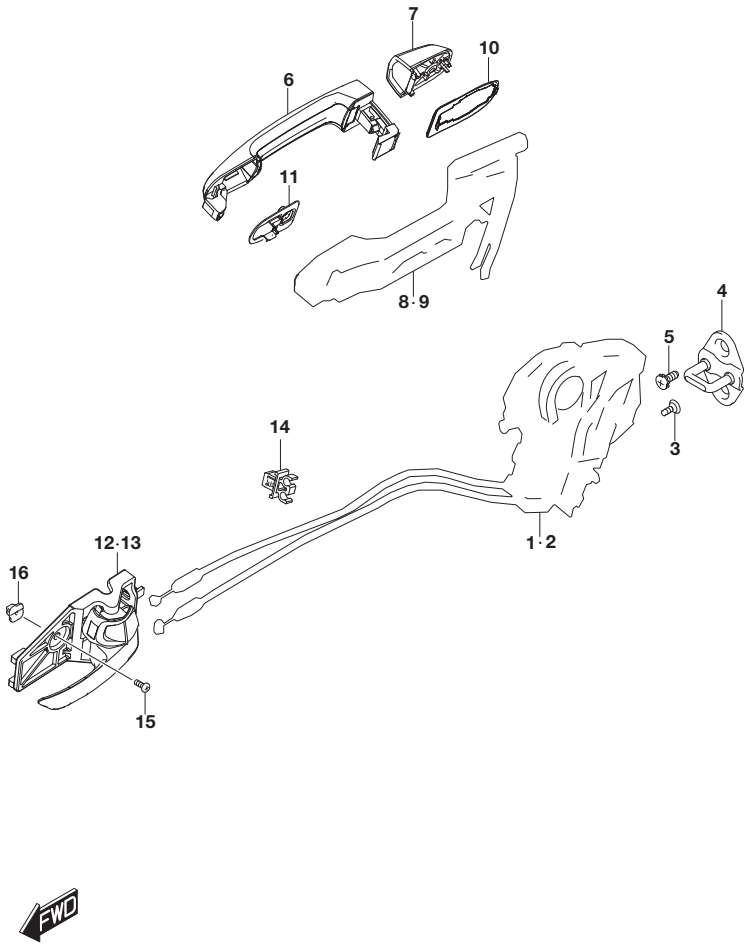

FIG.821A (4-C-14) REAR DOOR LOCK (LHD)

REF NO.	PART NO.	DESCRIPTION	Q'TY	REMARKS
1	82301-54P02	LATCH ASSY, RR DR RH	1	
2	82302-54P02	LATCH ASSY, RR DR LH	1	
3	09137-06032	SCREW (6X18)	6	
4	82610-54P00	STRIKER, DR LATCH	2	
5	09139-08025	SCREW (8X20)	4	
6-1	82812-63J00-5PK	HANDLE, SIDE DOOR OUT (BLACK)	2	N/PAINTING
6-2	82812-57LA0-ZCC	HANDLE, SIDE DOOR OUT (SILVER)	2	W/PAINTING
6-3	82812-57LA0-ZCD	HANDLE, SIDE DOOR OUT (GRAY)	2	W/PAINTING BODY COLOR:A9G,ZCD
6-4	82812-57LA0-ZCE	HANDLE, SIDE DOOR OUT (BLACK)	2	W/PAINTING
6-5	82812-57LA0-ZCF	HANDLE, SIDE DOOR OUT (RED)	2	W/PAINTING BODY COLOR:A9H,ZCF
6-6	82812-57LA0-ZNL	HANDLE, SIDE DOOR OUT (WHITE)	2	W/PAINTING
6-7	82812-57LA0-ZQN	HANDLE, SIDE DOOR OUT (TURQUOISE)	2	W/PAINTING BODY COLOR:A6H,A9L,ZQN
6-8	82812-57LA0-ZQQ	HANDLE, SIDE DOOR OUT (IVORY)	2	W/PAINTING BODY COLOR:A9N
6-9	82812-57LA0-ZZD	HANDLE, SIDE DOOR OUT (BLUE)	2	W/PAINTING BODY COLOR:DBF
6-10	82812-57LA0-ZZE	HANDLE, SIDE DOOR OUT (YELLOW)	2	W/PAINTING BODY COLOR:DBG,DBH
6-11	82812-57LA0-26U	HANDLE, SIDE DOOR OUT (WHITE)	2	W/PAINTING
7-1	82833-63J00-5PK	CAP, RR DR OUT (BLACK)	2	N/PAINTING
7-2	82833-57L00-ZCC	CAP, RR DR OUT (SILVER)	2	W/PAINTING
7-3	82833-57L00-ZCD	CAP, RR DR OUT (GRAY)	2	W/PAINTING BODY COLOR:A9G,ZCD
7-4	82833-57L00-ZCE	CAP, RR DR OUT (BLACK)	2	W/PAINTING
7-5	82833-57L00-ZCF	CAP, RR DR OUT (RED)	2	W/PAINTING BODY COLOR:A9H,ZCF
7-6	82833-57L00-ZNL	CAP, RR DR OUT (WHITE)	2	W/PAINTING
7-7	82833-57L00-ZQN	CAP, RR DR OUT (TURQUOISE)	2	W/PAINTING BODY COLOR:A6H,A9L,ZQN
7-8	82833-57L00-ZQQ	CAP, RR DR OUT (IVORY)	2	W/PAINTING BODY COLOR:A9N
7-9	82833-57L00-ZZD	CAP, RR DR OUT (BLUE)	2	W/PAINTING BODY COLOR:DBF

FIG.821A

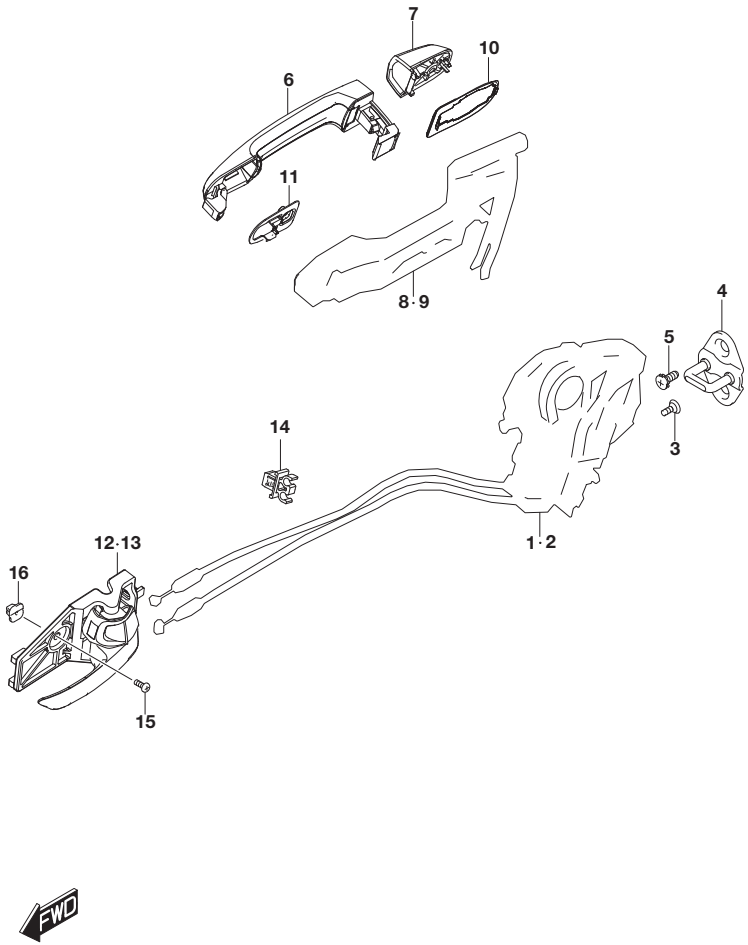

FIG.821A (4-C-15) REAR DOOR LOCK (LHD)

REF NO.	PART NO.	DESCRIPTION	Q'TY	REMARKS
7-10	82833-57L00-ZZE	CAP, RR DR OUT (YELLOW)	2	W/PAINTING BODY COLOR:DBG,DBH
7-11	82833-57L00-26U	CAP, RR DR OUT (WHITE)	2	W/PAINTING
8	82831-63J40	FRAME, RR DR OUT RH	1	
9	82841-63J40	FRAME, RR DR OUT LH	1	
10	82815-63J00	CUSHION, SIDE DR OUT	2	
11	82834-63J00	PAD, RR DR OUT	2	
12-1	83110-61M00-5PK	HANDLE, DR INSIDE RH (BLACK)	1	
12-2	83110-61M10-C48	HANDLE, DR INSIDE RH (CHROME/BLACK)	1	
13-1	83130-61M00-5PK	HANDLE, DR INSIDE LH (BLACK)	1	
13-2	83130-61M10-C48	HANDLE, DR INSIDE LH (CHROME/BLACK)	1	
14	83271-71L00	CLIP, DR INSIDE HANDLE CABLE	2	
15	09132-05058	SCREW (5X12)	2	
16	09148-05031	NUT	2	

FIG.821B

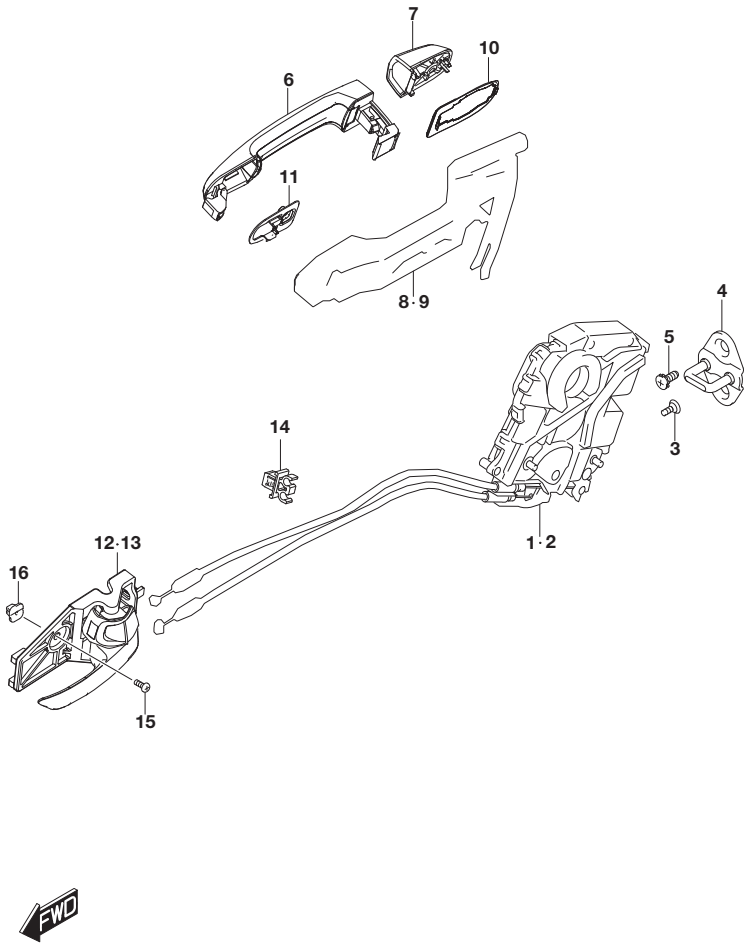

FIG.821B (4-D-2) REAR DOOR LOCK (RHD)

REF NO.	PART NO.	DESCRIPTION	Q'TY	REMARKS
1	82301-54PA4	LATCH ASSY, RR DR RH	1	
2	82302-54PA4	LATCH ASSY, RR DR LH	1	
3	09137-06032	SCREW (6X18)	6	
4	82610-54P00	STRIKER, DR LATCH	2	
5	09139-08025	SCREW (8X20)	4	
6-1	82812-63J00-5PK	HANDLE, SIDE DOOR OUT (BLACK)	2	N/PAINTING
6-2	82812-57LA0-ZCC	HANDLE, SIDE DOOR OUT (SILVER)	2	W/PAINTING
6-3	82812-57LA0-ZCD	HANDLE, SIDE DOOR OUT (GRAY)	2	W/PAINTING BODY COLOR:A9G,ZCD
6-4	82812-57LA0-ZCE	HANDLE, SIDE DOOR OUT (BLACK)	2	W/PAINTING
6-5	82812-57LA0-ZCF	HANDLE, SIDE DOOR OUT (RED)	2	W/PAINTING BODY COLOR:A9H,ZCF
6-6	82812-57LA0-ZNL	HANDLE, SIDE DOOR OUT (WHITE)	2	W/PAINTING
6-7	82812-57LA0-ZQN	HANDLE, SIDE DOOR OUT (TURQUOISE)	2	W/PAINTING BODY COLOR:A6H,A9L,ZQN
6-8	82812-57LA0-ZQQ	HANDLE, SIDE DOOR OUT (IVORY)	2	W/PAINTING BODY COLOR:A9N
6-9	82812-57LA0-ZZD	HANDLE, SIDE DOOR OUT (BLUE)	2	W/PAINTING BODY COLOR:DBF
6-10	82812-57LA0-ZZE	HANDLE, SIDE DOOR OUT (YELLOW)	2	W/PAINTING BODY COLOR:DBG,DBH
6-11	82812-57LA0-26U	HANDLE, SIDE DOOR OUT (WHITE)	2	W/PAINTING
7-1	82833-63J00-5PK	CAP, RR DR OUT (BLACK)	2	N/PAINTING
7-2	82833-57L00-ZCC	CAP, RR DR OUT (SILVER)	2	W/PAINTING
7-3	82833-57L00-ZCD	CAP, RR DR OUT (GRAY)	2	W/PAINTING BODY COLOR:A9G,ZCD
7-4	82833-57L00-ZCE	CAP, RR DR OUT (BLACK)	2	W/PAINTING
7-5	82833-57L00-ZCF	CAP, RR DR OUT (RED)	2	W/PAINTING BODY COLOR:A9H,ZCF
7-6	82833-57L00-ZNL	CAP, RR DR OUT (WHITE)	2	W/PAINTING
7-7	82833-57L00-ZQN	CAP, RR DR OUT (TURQUOISE)	2	W/PAINTING BODY COLOR:A6H,A9L,ZQN
7-8	82833-57L00-ZQQ	CAP, RR DR OUT (IVORY)	2	W/PAINTING BODY COLOR:A9N
7-9	82833-57L00-ZZD	CAP, RR DR OUT (BLUE)	2	W/PAINTING BODY COLOR:DBF

FIG.821B

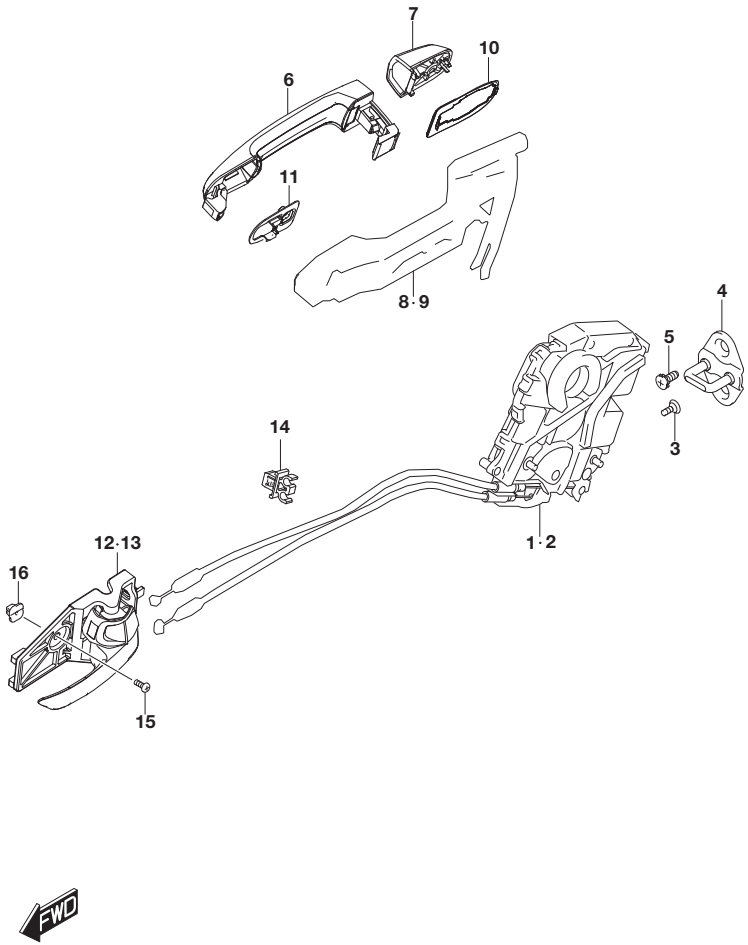

FIG.821B (4-D-3) REAR DOOR LOCK (RHD)

REF NO.	PART NO.	DESCRIPTION	Q'TY	REMARKS
7-10	82833-57L00-ZZE	CAP, RR DR OUT (YELLOW)	2	W/PAINTING BODY COLOR:DBG,DBH
7-11	82833-57L00-26U	CAP, RR DR OUT (WHITE)	2	W/PAINTING
8	82831-63J40	FRAME, RR DR OUT RH	1	
9	82841-63J40	FRAME, RR DR OUT LH	1	
10	82815-63J00	CUSHION, SIDE DR OUT	2	
11	82834-63J00	PAD, RR DR OUT	2	
12-1	83110-61M00-5PK	HANDLE, DR INSIDE RH (BLACK)	1	
12-2	83110-61M10-C48	HANDLE, DR INSIDE RH (CHROME/BLACK)	1	
13-1	83130-61M00-5PK	HANDLE, DR INSIDE LH (BLACK)	1	
13-2	83130-61M10-C48	HANDLE, DR INSIDE LH (CHROME/BLACK)	1	
14	83271-71L00	CLIP, DR INSIDE HANDLE CABLE	2	
15	09132-05058	SCREW (5X12)	2	
16	09148-05031	NUT	2	

APK414-3 P22 821B
REAR DOOR LOCK (2)

FIG.824A

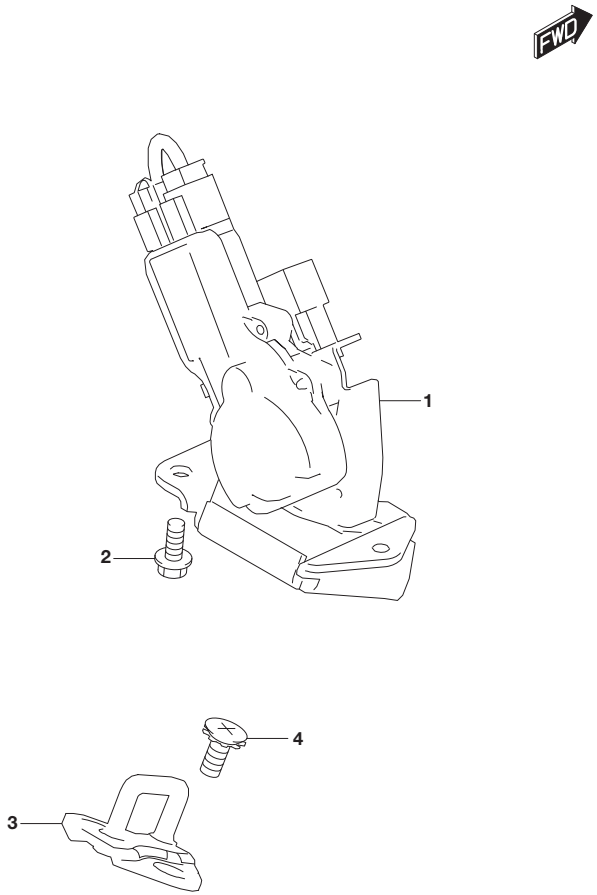

FIG.824A (4-D-4) BACK DOOR LOCK

REF NO.	PART NO.	DESCRIPTION	Q'TY	REMARKS
1-1	82510-54P11	LATCH, BK DR	1	LHD
1-2	82510-54P02	LATCH, BK DR	1	RHD
2	02162-0616A	SCREW	3	
3	82650-79J10	STRIKER, BACK DR LATCH	1	
4	09139-08025	SCREW (8X20)	2	

APK414-3 P22 824A
BACK DOOR LOCK

FIG.835A

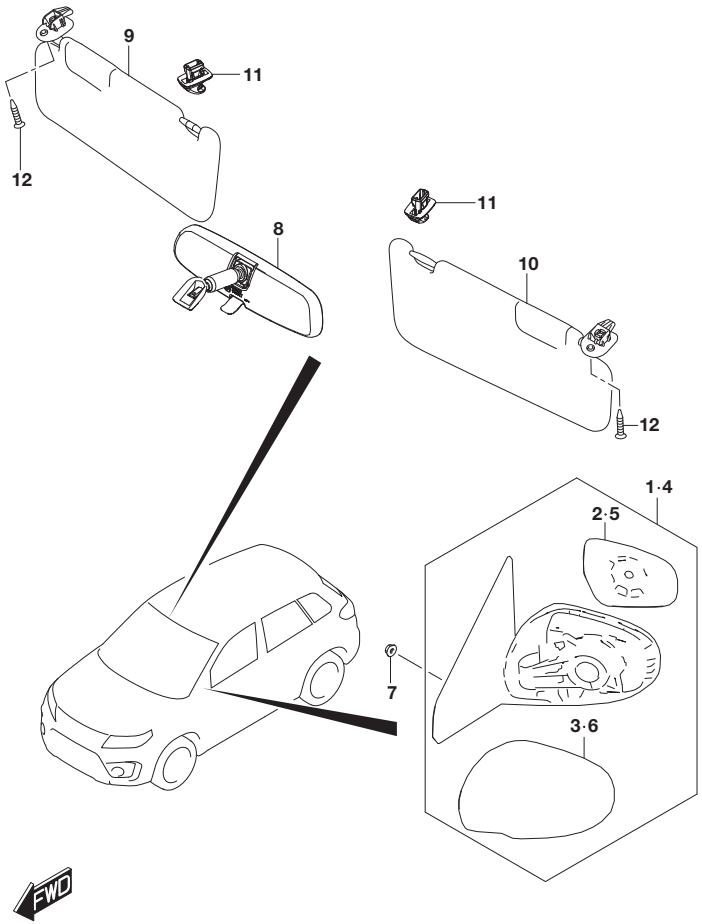

FIG.835A (4-D-5) MIRROR/SUNVISOR (SEE NOTE)

REF NO.	PART NO.	DESCRIPTION	Q'TY	REMARKS
1-1	84701-54P91	MIRROR ASSY, RR VIEW RH	1	N/OUTSIDE MIRROR HEATER
1-2	84701-54PK1	MIRROR ASSY, RR VIEW RH	1	W/OUTSIDE MIRROR HEATER
2-1	84730-61M00	.GLASS, OUT RR VIEW MIR RH	1	N/OUTSIDE MIRROR HEATER
2-2	84730-61M50	.GLASS, OUT RR VIEW MIR RH	1	W/OUTSIDE MIRROR HEATER
3	84718-61M00-5PK	.COVER, MIRROR VISOR RH (BLACK)	1	
4-1	84702-54P91	MIRROR ASSY, RR VIEW LH	1	N/OUTSIDE MIRROR HEATER
4-2	84702-54PK1	MIRROR ASSY, RR VIEW LH	1	W/OUTSIDE MIRROR HEATER
5-1	84740-61M00	.GLASS, OUT RR VIEW MIR LH	1	N/OUTSIDE MIRROR HEATER
5-2	84740-61M20	.GLASS, OUT RR VIEW MIR LH	1	W/OUTSIDE MIRROR HEATER
6	84728-61M00-5PK	.COVER, MIRROR VISOR LH (BLACK)	1	
7	08316-1006A	NUT	6	
8	84703-71L00	MIRROR ASSY, INS RR VIEW	1	
9	84801-61M20-6GS	SUNVISOR ASSY RH (GRAY)	1	
10	84802-61M20-6GS	SUNVISOR ASSY LH (GRAY)	1	

NOTE : W/FENDER TURN SIGNAL:LHD:N/BLIND SPOT WARNING:
N/SUNVISOR MIRROR LAMP

FIG.835B(4-D-7) MIRROR/SUNVISOR
(W/FENDER TURN SIGNAL:LHD:N/BLIND SPOT WARNING:
W/SUNVISOR MIRROR LAMP)
FIG.835C(4-D-12) MIRROR/SUNVISOR
(W/FENDER TURN SIGNAL:LHD:W/BLIND SPOT WARNING)
FIG.835D(4-E-2) MIRROR/SUNVISOR
(W/FENDER TURN SIGNAL:RHD:N/BLIND SPOT WARNING:
N/SUNVISOR MIRROR LAMP)
FIG.835E(4-E-3) MIRROR/SUNVISOR
(W/FENDER TURN SIGNAL:RHD:N/BLIND SPOT WARNING:
W/SUNVISOR MIRROR LAMP)
FIG.835F(4-E-8) MIRROR/SUNVISOR
(W/FENDER TURN SIGNAL:RHD:W/BLIND SPOT WARNING)
FIG.835G(4-E-11) MIRROR/SUNVISOR (W/MIRROR TURN SIGNAL)

FIG.835A

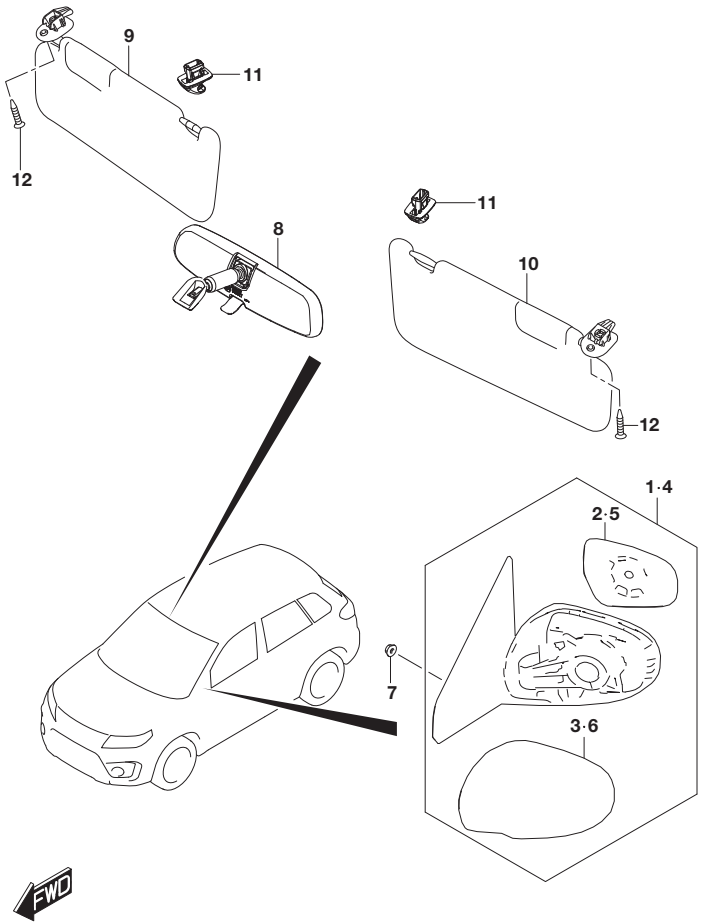

FIG.835A (4-D-6) MIRROR/SUNVISOR (SEE NOTE)

REF NO.	PART NO.	DESCRIPTION	Q'TY	REMARKS
11	84851-85K00-6GS	HOLDER, SUNVISOR (GRAY)	2	
12	09139-05061	SCREW (5X16)	2	

NOTE : W/FENDER TURN SIGNAL:LHD:N/BLIND SPOT WARNING:
N/SUNVISOR MIRROR LAMP

FIG.835B

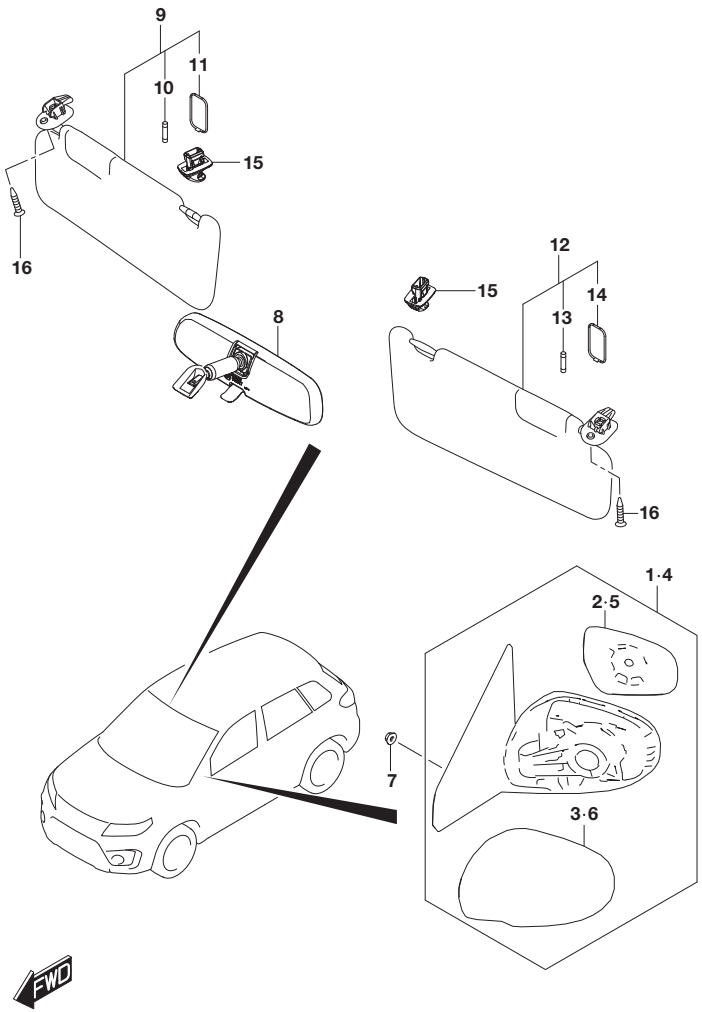

FIG.835B (4-D-7) MIRROR/SUNVISOR (SEE NOTE)

REF NO.	PART NO.	DESCRIPTION	Q'TY	REMARKS
1-1	84701-54P91	MIRROR ASSY, RR VIEW RH	1	N/OUTSIDE MIRROR HEATER: N/PAINTING
1-2	84701-54P11-ZCC	MIRROR ASSY, RR VIEW RH (SILVER)	1	N/OUTSIDE MIRROR HEATER: W/PAINTING
1-3	84701-54P11-ZCD	MIRROR ASSY, RR VIEW RH (GRAY)	1	N/OUTSIDE MIRROR HEATER: W/PAINTING
1-4	84701-54P11-ZCE	MIRROR ASSY, RR VIEW RH (BLACK)	1	N/OUTSIDE MIRROR HEATER: W/PAINTING BODY COLOR:A9G,A9H,A9L,A9N, DBF,DBH,ZCE
1-5	84701-54P11-ZCF	MIRROR ASSY, RR VIEW RH (RED)	1	N/OUTSIDE MIRROR HEATER: W/PAINTING
1-6	84701-54P11-ZNL	MIRROR ASSY, RR VIEW RH (WHITE)	1	N/OUTSIDE MIRROR HEATER: W/PAINTING
1-7	84701-54P11-ZQN	MIRROR ASSY, RR VIEW RH (TURQUOISE)	1	N/OUTSIDE MIRROR HEATER: W/PAINTING
1-8	84701-54P11-26U	MIRROR ASSY, RR VIEW RH (WHITE)	1	N/OUTSIDE MIRROR HEATER: W/PAINTING BODY COLOR:A6H,DBG,26U
1-9	84701-54PK1	MIRROR ASSY, RR VIEW RH	1	W/OUTSIDE MIRROR HEATER: N/PAINTING
1-10	84701-54PB1-ZCC	MIRROR ASSY, RR VIEW RH (SILVER)	1	W/OUTSIDE MIRROR HEATER: W/PAINTING
1-11	84701-54PB1-ZCD	MIRROR ASSY, RR VIEW RH (GRAY)	1	W/OUTSIDE MIRROR HEATER: W/PAINTING
1-12	84701-54PB1-ZCE	MIRROR ASSY, RR VIEW RH (BLACK)	1	W/OUTSIDE MIRROR HEATER: W/PAINTING BODY COLOR:A9G,A9H,A9L,A9N, DBF,DBH,ZCE
1-13	84701-54PB1-ZCF	MIRROR ASSY, RR VIEW RH (RED)	1	W/OUTSIDE MIRROR HEATER: W/PAINTING

NOTE : W/FENDER TURN SIGNAL:LHD:N/BLIND SPOT WARNING: W/SUNVISOR MIRROR LAMP

FIG.835B

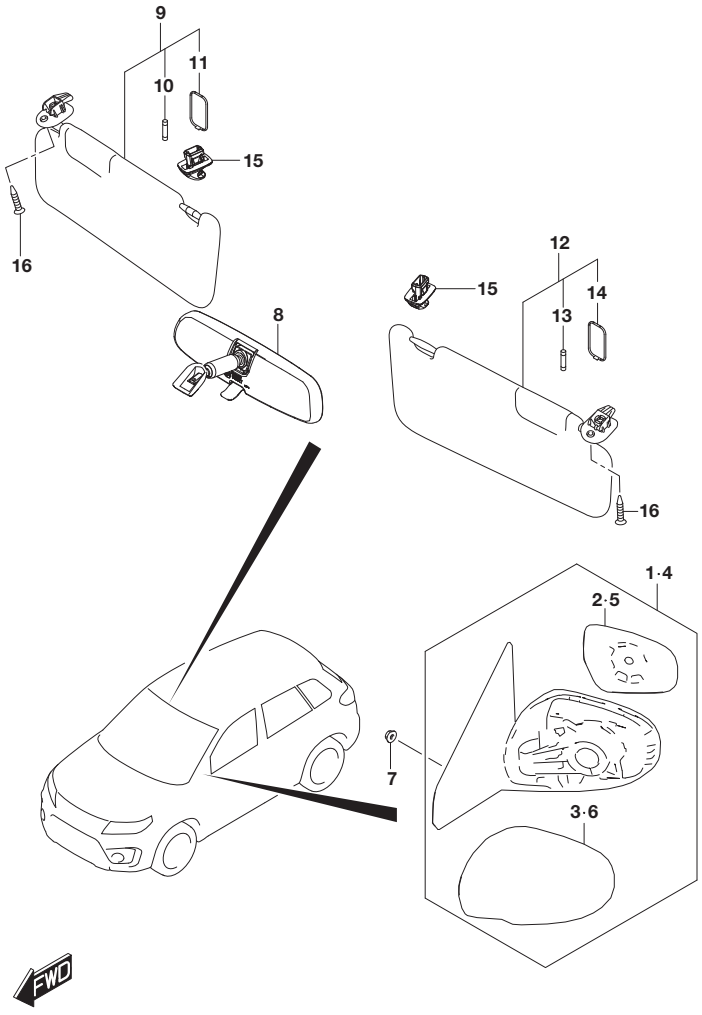

FIG.835B (4-D-8) MIRROR/SUNVISOR (SEE NOTE)

REF NO.	PART NO.	DESCRIPTION	Q'TY	REMARKS
1-14	84701-54PB1-ZNL	MIRROR ASSY, RR VIEW RH (WHITE)	1	W/OUTSIDE MIRROR HEATER: W/PAINTING
1-15	84701-54PB1-ZQN	MIRROR ASSY, RR VIEW RH (TURQUOISE)	1	W/OUTSIDE MIRROR HEATER: W/PAINTING
1-16	84701-54PB1-26U	MIRROR ASSY, RR VIEW RH (WHITE)	1	W/OUTSIDE MIRROR HEATER: W/PAINTING BODY COLOR:A6H,DBG,26U
2-1	84730-61M00	.GLASS, OUT RR VIEW MIR RH	1	N/OUTSIDE MIRROR HEATER
2-2	84730-61M50	.GLASS, OUT RR VIEW MIR RH	1	W/OUTSIDE MIRROR HEATER
3-1	84718-61M00-5PK	.COVER, MIRROR VISOR RH (BLACK)	1	N/PAINTING
3-2	84718-61M10-ZCC	.COVER, MIRROR VISOR RH (SILVER)	1	W/PAINTING
3-3	84718-61M10-ZCD	.COVER, MIRROR VISOR RH (GRAY)	1	W/PAINTING
3-4	84718-61M10-ZCE	.COVER, MIRROR VISOR RH (BLACK)	1	W/PAINTING BODY COLOR:A9G,A9H,A9L,A9N, DBF,DBH,ZCE
3-5	84718-61M10-ZCF	.COVER, MIRROR VISOR RH (RED)	1	W/PAINTING
3-6	84718-61M10-ZNL	.COVER, MIRROR VISOR RH (WHITE)	1	W/PAINTING
3-7	84718-61M10-ZQN	.COVER, MIRROR VISOR RH (TURQUOISE)	1	W/PAINTING
3-8	84718-61M10-26U	.COVER, MIRROR VISOR RH (WHITE)	1	W/PAINTING BODY COLOR:A6H,DBG,26U

NOTE : W/FENDER TURN SIGNAL:LHD:N/BLIND SPOT WARNING:
W/SUNVISOR MIRROR LAMP

FIG.835B

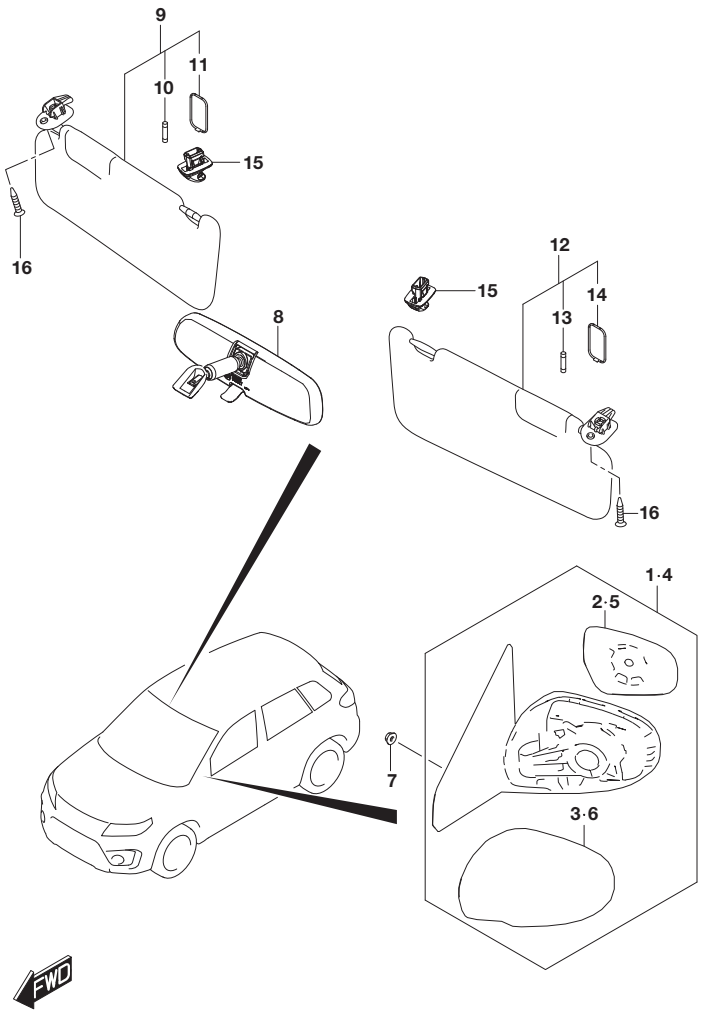

FIG.835B (4-D-9) MIRROR/SUNVISOR (SEE NOTE)

REF NO.	PART NO.	DESCRIPTION	Q'TY	REMARKS
4-1	84702-54P91	MIRROR ASSY, RR VIEW LH	1	N/OUTSIDE MIRROR HEATER: N/PAINTING
4-2	84702-54P11-ZCC	MIRROR ASSY, RR VIEW LH (SILVER)	1	N/OUTSIDE MIRROR HEATER: W/PAINTING
4-3	84702-54P11-ZCD	MIRROR ASSY, RR VIEW LH (GRAY)	1	N/OUTSIDE MIRROR HEATER: W/PAINTING
4-4	84702-54P11-ZCE	MIRROR ASSY, RR VIEW LH (BLACK)	1	N/OUTSIDE MIRROR HEATER: W/PAINTING BODY COLOR:A9G,A9H,A9L,A9N, DBF,DBH,ZCE
4-5	84702-54P11-ZCF	MIRROR ASSY, RR VIEW LH (RED)	1	N/OUTSIDE MIRROR HEATER: W/PAINTING
4-6	84702-54P11-ZNL	MIRROR ASSY, RR VIEW LH (WHITE)	1	N/OUTSIDE MIRROR HEATER: W/PAINTING
4-7	84702-54P11-ZQN	MIRROR ASSY, RR VIEW LH (TURQUOISE)	1	N/OUTSIDE MIRROR HEATER: W/PAINTING
4-8	84702-54P11-26U	MIRROR ASSY, RR VIEW LH (WHITE)	1	N/OUTSIDE MIRROR HEATER: W/PAINTING BODY COLOR:A6H,DBG,26U
4-9	84702-54PK1	MIRROR ASSY, RR VIEW LH	1	W/OUTSIDE MIRROR HEATER: N/PAINTING
4-10	84702-54PB1-ZCC	MIRROR ASSY, RR VIEW LH (SILVER)	1	W/OUTSIDE MIRROR HEATER: W/PAINTING
4-11	84702-54PB1-ZCD	MIRROR ASSY, RR VIEW LH (GRAY)	1	W/OUTSIDE MIRROR HEATER: W/PAINTING
4-12	84702-54PB1-ZCE	MIRROR ASSY, RR VIEW LH (BLACK)	1	W/OUTSIDE MIRROR HEATER: W/PAINTING BODY COLOR:A9G,A9H,A9L,A9N, DBF,DBH,ZCE
4-13	84702-54PB1-ZCF	MIRROR ASSY, RR VIEW LH (RED)	1	W/OUTSIDE MIRROR HEATER: W/PAINTING

NOTE : W/FENDER TURN SIGNAL:LHD:N/BLIND SPOT WARNING: W/SUNVISOR MIRROR LAMP

FIG.835B

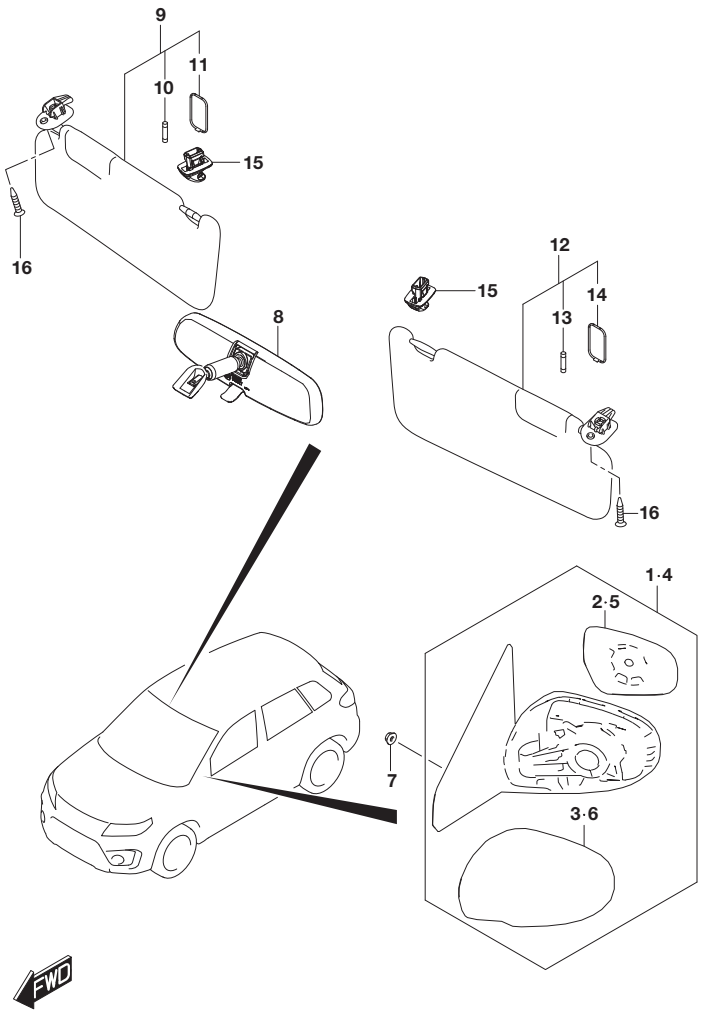

FIG.835B (4-D-10) MIRROR/SUNVISOR (SEE NOTE)

REF NO.	PART NO.	DESCRIPTION	Q'TY	REMARKS
4-14	84702-54PB1-ZNL	MIRROR ASSY, RR VIEW LH (WHITE)	1	W/OUTSIDE MIRROR HEATER: W/PAINTING
4-15	84702-54PB1-ZQN	MIRROR ASSY, RR VIEW LH (TURQUOISE)	1	W/OUTSIDE MIRROR HEATER: W/PAINTING
4-16	84702-54PB1-26U	MIRROR ASSY, RR VIEW LH (WHITE)	1	W/OUTSIDE MIRROR HEATER: W/PAINTING BODY COLOR:A6H,DBG,26U
5-1	84740-61M00	.GLASS, OUT RR VIEW MIR LH	1	N/OUTSIDE MIRROR HEATER
5-2	84740-61M20	.GLASS, OUT RR VIEW MIR LH	1	W/OUTSIDE MIRROR HEATER
6-1	84728-61M00-5PK	.COVER, MIRROR VISOR LH (BLACK)	1	N/PAINTING
6-2	84728-61M10-ZCC	.COVER, MIRROR VISOR LH (SILVER)	1	W/PAINTING
6-3	84728-61M10-ZCD	.COVER, MIRROR VISOR LH (GRAY)	1	W/PAINTING
6-4	84728-61M10-ZCE	.COVER, MIRROR VISOR LH (BLACK)	1	W/PAINTING BODY COLOR:A9G,A9H,A9L,A9N, DBF,DBH,ZCE
6-5	84728-61M10-ZCF	.COVER, MIRROR VISOR LH (RED)	1	W/PAINTING
6-6	84728-61M10-ZNL	.COVER, MIRROR VISOR LH (WHITE)	1	W/PAINTING
6-7	84728-61M10-ZQN	.COVER, MIRROR VISOR LH (TURQUOISE)	1	W/PAINTING
6-8	84728-61M10-26U	.COVER, MIRROR VISOR LH (WHITE)	1	W/PAINTING BODY COLOR:A6H,DBG,26U
7	08316-1006A	NUT	6	
8	84703-71L00	MIRROR ASSY, INS RR VIEW	1	
9	84801-54P42-6GS	SUNVISOR ASSY RH (GRAY)	1	
10	84841-61M00	.BULB, SUNVISOR	1	
11	84842-61M00	.LENS, SUNVISOR	1	
12	84802-54P42-6GS	SUNVISOR ASSY LH (GRAY)	1	
13	84841-61M00	.BULB, SUNVISOR	1	

NOTE : W/FENDER TURN SIGNAL:LHD:N/BLIND SPOT WARNING: W/SUNVISOR MIRROR LAMP

FIG.835B

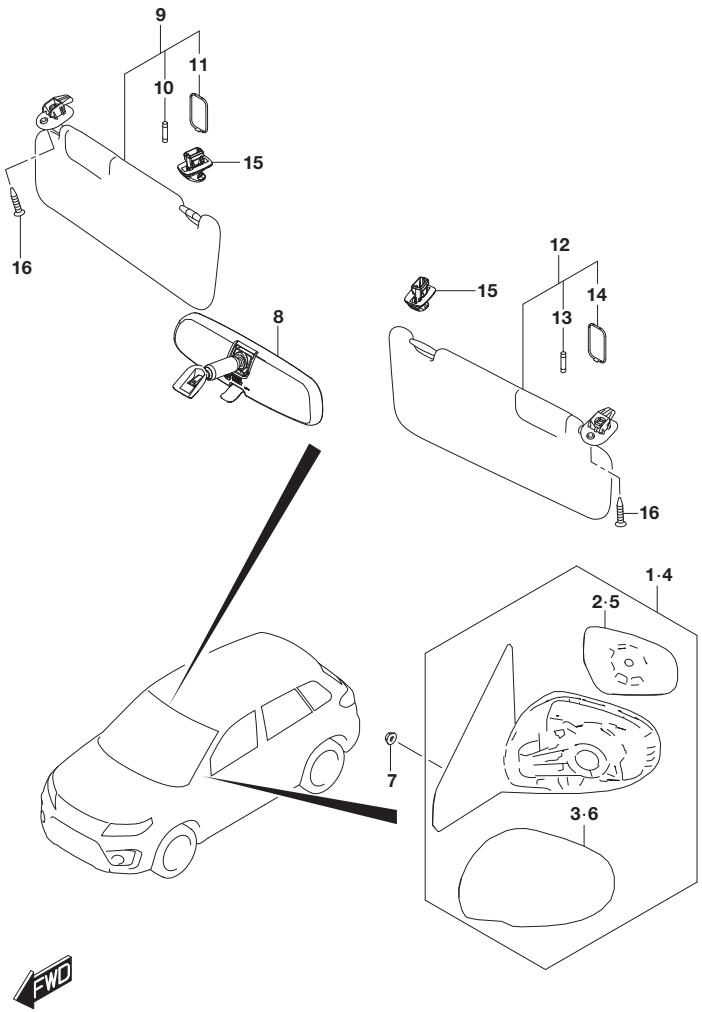

FIG.835B (4-D-11) MIRROR/SUNVISOR (SEE NOTE)

REF NO.	PART NO.	DESCRIPTION	Q'TY	REMARKS
14	84842-61M00	.LENS, SUNVISOR	1	
15	84851-85K00-6GS	HOLDER, SUNVISOR (GRAY)	2	
16	09139-05061	SCREW (5X16)	2	

NOTE : W/FENDER TURN SIGNAL:LHD:N/BLIND SPOT WARNING:
W/SUNVISOR MIRROR LAMP

FIG.835C

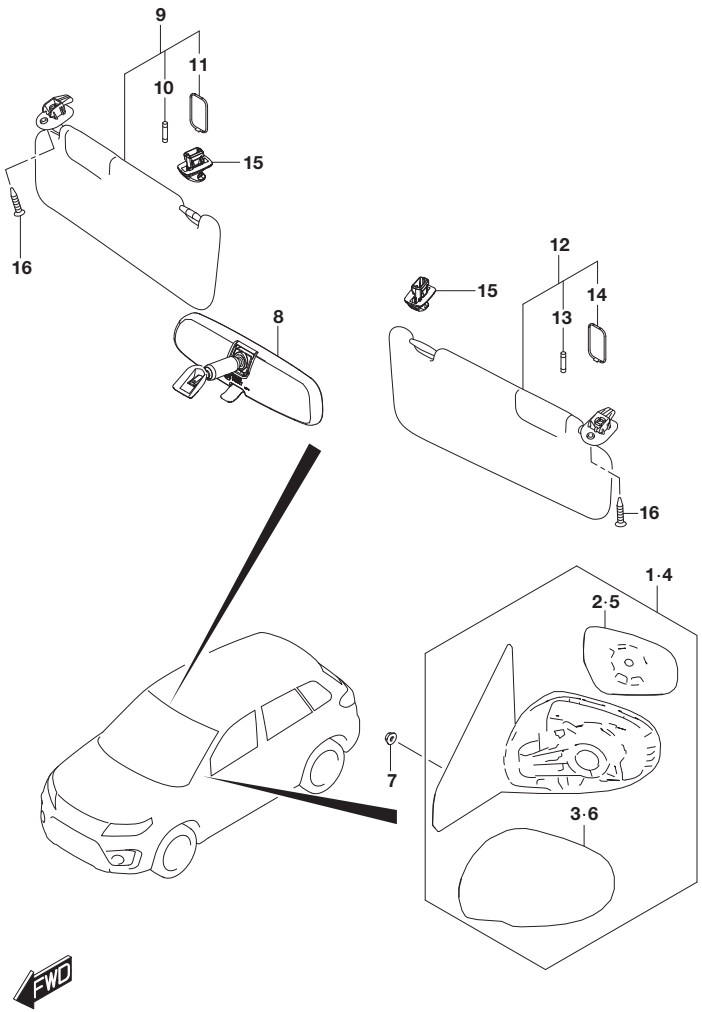

FIG.835C (4-D-12) MIRROR/SUNVISOR (SEE NOTE)

REF NO.	PART NO.	DESCRIPTION	Q'TY	REMARKS
1-1	84701-54PM0-ZCC	MIRROR ASSY, RR VIEW RH (SILVER)	1	
1-2	84701-54PM0-ZCD	MIRROR ASSY, RR VIEW RH (GRAY)	1	
1-3	84701-54PM0-ZCE	MIRROR ASSY, RR VIEW RH (BLACK)	1	BODY COLOR:A9G,A9H,A9L,A9N, DBF,DBH,ZCE
1-4	84701-54PM0-ZCF	MIRROR ASSY, RR VIEW RH (RED)	1	
1-5	84701-54PM0-ZNL	MIRROR ASSY, RR VIEW RH (WHITE)	1	
1-6	84701-54PM0-ZQN	MIRROR ASSY, RR VIEW RH (TURQUOISE)	1	
1-7	84701-54PM0-26U	MIRROR ASSY, RR VIEW RH (WHITE)	1	BODY COLOR:A6H,DBG,26U
2	84730-86R20	.GLASS, OUT RR VIEW MIR RH	1	
3-1	84718-61M10-ZCC	.COVER, MIRROR VISOR RH (SILVER)	1	
3-2	84718-61M10-ZCD	.COVER, MIRROR VISOR RH (GRAY)	1	
3-3	84718-61M10-ZCE	.COVER, MIRROR VISOR RH (BLACK)	1	BODY COLOR:A9G,A9H,A9L,A9N, DBF,DBH,ZCE
3-4	84718-61M10-ZCF	.COVER, MIRROR VISOR RH (RED)	1	
3-5	84718-61M10-ZNL	.COVER, MIRROR VISOR RH (WHITE)	1	
3-6	84718-61M10-ZQN	.COVER, MIRROR VISOR RH (TURQUOISE)	1	
3-7	84718-61M10-26U	.COVER, MIRROR VISOR RH (WHITE)	1	BODY COLOR:A6H,DBG,26U

NOTE : W/FENDER TURN SIGNAL:LHD:W/BLIND SPOT WARNING

FIG.835C

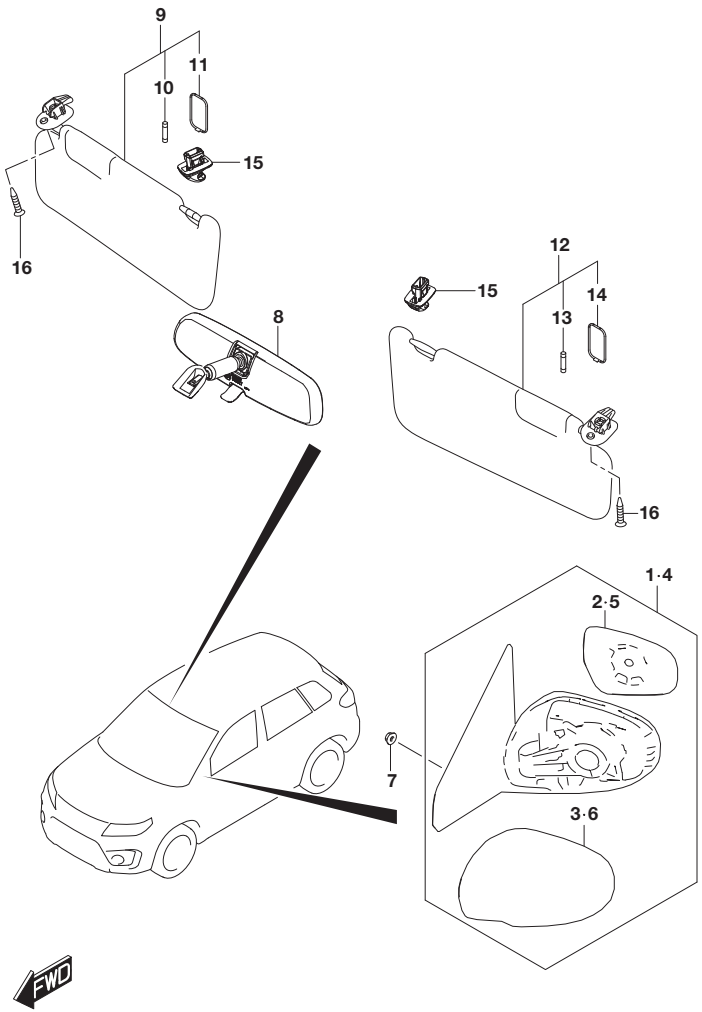

FIG.835C (4-D-13) MIRROR/SUNVISOR (SEE NOTE)

REF NO.	PART NO.	DESCRIPTION	Q'TY	REMARKS
4-1	84702-54PM0-ZCC	MIRROR ASSY, RR VIEW LH (SILVER)	1	
4-2	84702-54PM0-ZCD	MIRROR ASSY, RR VIEW LH (GRAY)	1	
4-3	84702-54PM0-ZCE	MIRROR ASSY, RR VIEW LH (BLACK)	1	BODY COLOR:A9G,A9H,A9L,A9N, DBF,DBH,ZCE
4-4	84702-54PM0-ZCF	MIRROR ASSY, RR VIEW LH (RED)	1	
4-5	84702-54PM0-ZNL	MIRROR ASSY, RR VIEW LH (WHITE)	1	
4-6	84702-54PM0-ZQN	MIRROR ASSY, RR VIEW LH (TURQUOISE)	1	
4-7	84702-54PM0-26U	MIRROR ASSY, RR VIEW LH (WHITE)	1	BODY COLOR:A6H,DBG,26U
5	84740-86R10	.GLASS, OUT RR VIEW MIR LH	1	
6-1	84728-61M10-ZCC	.COVER, MIRROR VISOR LH (SILVER)	1	
6-2	84728-61M10-ZCD	.COVER, MIRROR VISOR LH (GRAY)	1	
6-3	84728-61M10-ZCE	.COVER, MIRROR VISOR LH (BLACK)	1	BODY COLOR:A9G,A9H,A9L,A9N, DBF,DBH,ZCE
6-4	84728-61M10-ZCF	.COVER, MIRROR VISOR LH (RED)	1	
6-5	84728-61M10-ZNL	.COVER, MIRROR VISOR LH (WHITE)	1	
6-6	84728-61M10-ZQN	.COVER, MIRROR VISOR LH (TURQUOISE)	1	
6-7	84728-61M10-26U	.COVER, MIRROR VISOR LH (WHITE)	1	BODY COLOR:A6H,DBG,26U
7	08316-1006A	NUT	6	
8	84703-71L00	MIRROR ASSY, INS RR VIEW	1	
9	84801-54P42-6GS	SUNVISOR ASSY RH (GRAY)	1	
10	84841-61M00	.BULB, SUNVISOR	1	
11	84842-61M00	.LENS, SUNVISOR	1	
12	84802-54P42-6GS	SUNVISOR ASSY LH (GRAY)	1	
13	84841-61M00	.BULB, SUNVISOR	1	

NOTE : W/FENDER TURN SIGNAL:LHD:W/BLIND SPOT WARNING

FIG.835C

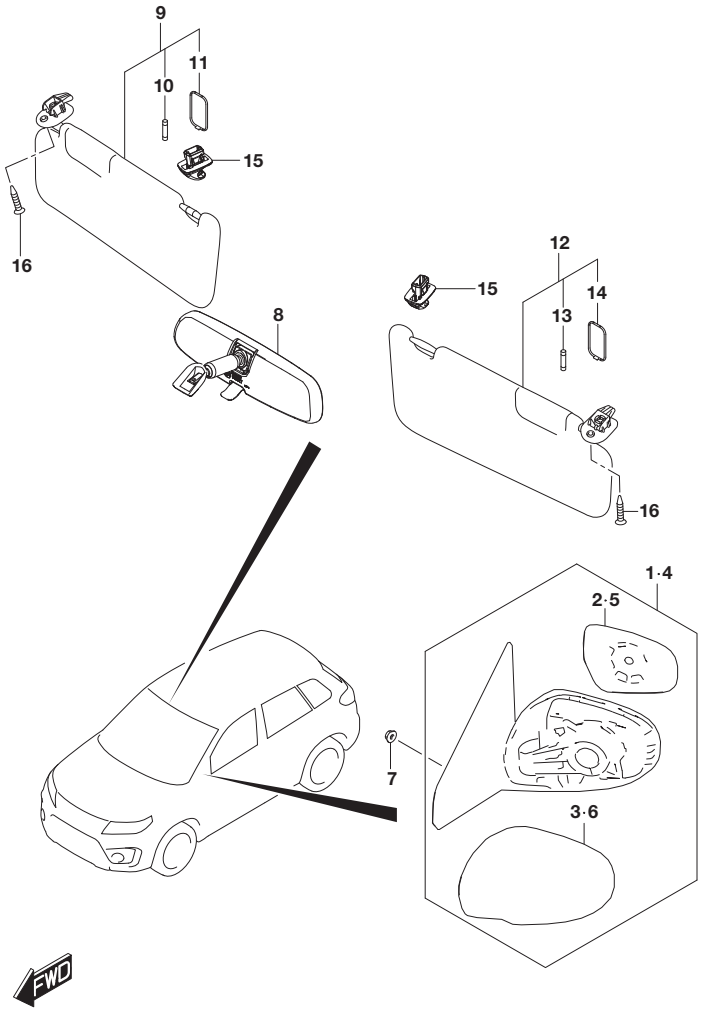

FIG.835C (4-D-14) MIRROR/SUNVISOR (SEE NOTE)

REF NO.	PART NO.	DESCRIPTION	Q'TY	REMARKS
14	84842-61M00	.LENS, SUNVISOR	1	
15	84851-85K00-6GS	HOLDER, SUNVISOR (GRAY)	2	
16	09139-05061	SCREW (5X16)	2	

NOTE : W/FENDER TURN SIGNAL:LHD:W/BLIND SPOT WARNING

FIG.835D

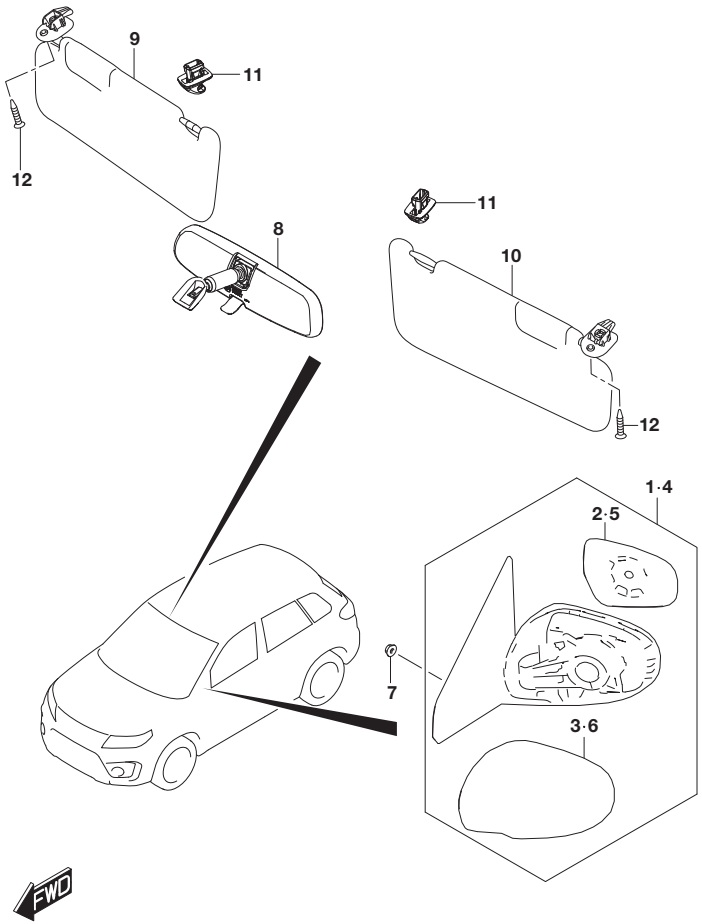

FIG.835D (4-E-2) MIRROR/SUNVISOR (SEE NOTE)

REF NO.	PART NO.	DESCRIPTION	Q'TY	REMARKS
1-1	84701-54P81	MIRROR ASSY, RR VIEW RH	1	N/OUTSIDE MIRROR HEATER
1-2	84701-54PJ1	MIRROR ASSY, RR VIEW RH	1	W/OUTSIDE MIRROR HEATER
2-1	84730-61M00	.GLASS, OUT RR VIEW MIR RH	1	N/OUTSIDE MIRROR HEATER
2-2	84730-61M20	.GLASS, OUT RR VIEW MIR RH	1	W/OUTSIDE MIRROR HEATER
3	84718-61M00-5PK	.COVER, MIRROR VISOR RH (BLACK)	1	
4-1	84702-54P81	MIRROR ASSY, RR VIEW LH	1	N/OUTSIDE MIRROR HEATER
4-2	84702-54PJ1	MIRROR ASSY, RR VIEW LH	1	W/OUTSIDE MIRROR HEATER
5-1	84740-61M00	.GLASS, OUT RR VIEW MIR LH	1	N/OUTSIDE MIRROR HEATER
5-2	84740-61M50	.GLASS, OUT RR VIEW MIR LH	1	W/OUTSIDE MIRROR HEATER
6	84728-61M00-5PK	.COVER, MIRROR VISOR LH (BLACK)	1	
7	08316-1006A	NUT	6	
8	84703-71L00	MIRROR ASSY, INS RR VIEW	1	
9	84801-61M30-6GS	SUNVISOR ASSY RH (GRAY)	1	
10	84802-61M30-6GS	SUNVISOR ASSY LH (GRAY)	1	
11	84851-85K00-6GS	HOLDER, SUNVISOR (GRAY)	2	
12	09139-05061	SCREW (5X16)	2	

NOTE : W/FENDER TURN SIGNAL:RHD:N/BLIND SPOT WARNING:
N/SUNVISOR MIRROR LAMP

FIG.835E

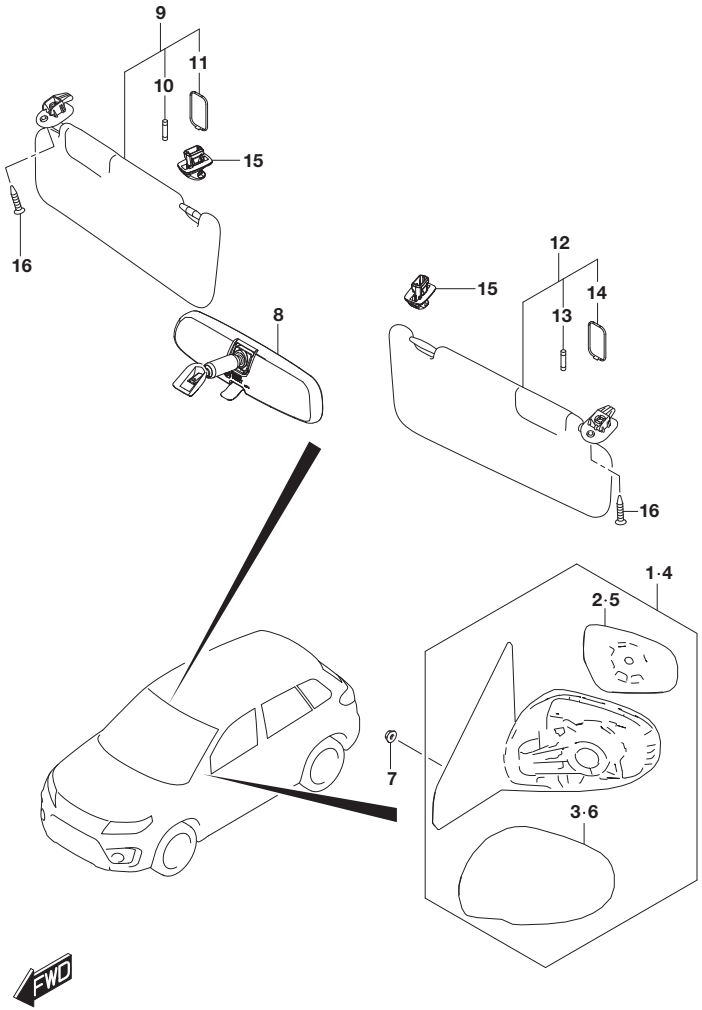

FIG.835E (4-E-3) MIRROR/SUNVISOR (SEE NOTE)

REF NO.	PART NO.	DESCRIPTION	Q'TY	REMARKS
1-1	84701-54P81	MIRROR ASSY, RR VIEW RH	1	N/OUTSIDE MIRROR HEATER: N/PAINTING
1-2	84701-54P01-ZCC	MIRROR ASSY, RR VIEW RH (SILVER)	1	N/OUTSIDE MIRROR HEATER: W/PAINTING
1-3	84701-54P01-ZCD	MIRROR ASSY, RR VIEW RH (GRAY)	1	N/OUTSIDE MIRROR HEATER: W/PAINTING
1-4	84701-54P01-ZCE	MIRROR ASSY, RR VIEW RH (BLACK)	1	N/OUTSIDE MIRROR HEATER: W/PAINTING BODY COLOR:A9G,A9H,A9L,A9N, DBF,DBH,ZCE
1-5	84701-54P01-ZCF	MIRROR ASSY, RR VIEW RH (RED)	1	N/OUTSIDE MIRROR HEATER: W/PAINTING
1-6	84701-54P01-ZNL	MIRROR ASSY, RR VIEW RH (WHITE)	1	N/OUTSIDE MIRROR HEATER: W/PAINTING
1-7	84701-54P01-ZQN	MIRROR ASSY, RR VIEW RH (TURQUOISE)	1	N/OUTSIDE MIRROR HEATER: W/PAINTING
1-8	84701-54P01-26U	MIRROR ASSY, RR VIEW RH (WHITE)	1	N/OUTSIDE MIRROR HEATER: W/PAINTING BODY COLOR:A6H,DBG,26U
1-9	84701-54PJ1	MIRROR ASSY, RR VIEW RH	1	W/OUTSIDE MIRROR HEATER: N/PAINTING
1-10	84701-54PA1-ZCC	MIRROR ASSY, RR VIEW RH (SILVER)	1	W/OUTSIDE MIRROR HEATER: W/PAINTING
1-11	84701-54PA1-ZCD	MIRROR ASSY, RR VIEW RH (GRAY)	1	W/OUTSIDE MIRROR HEATER: W/PAINTING
1-12	84701-54PA1-ZCE	MIRROR ASSY, RR VIEW RH (BLACK)	1	W/OUTSIDE MIRROR HEATER: W/PAINTING BODY COLOR:A9G,A9H,A9L,A9N, DBF,DBH,ZCE
1-13	84701-54PA1-ZCF	MIRROR ASSY, RR VIEW RH (RED)	1	W/OUTSIDE MIRROR HEATER: W/PAINTING

NOTE : W/FENDER TURN SIGNAL:RHD:N/BLIND SPOT WARNING: W/SUNVISOR MIRROR LAMP

FIG.835E

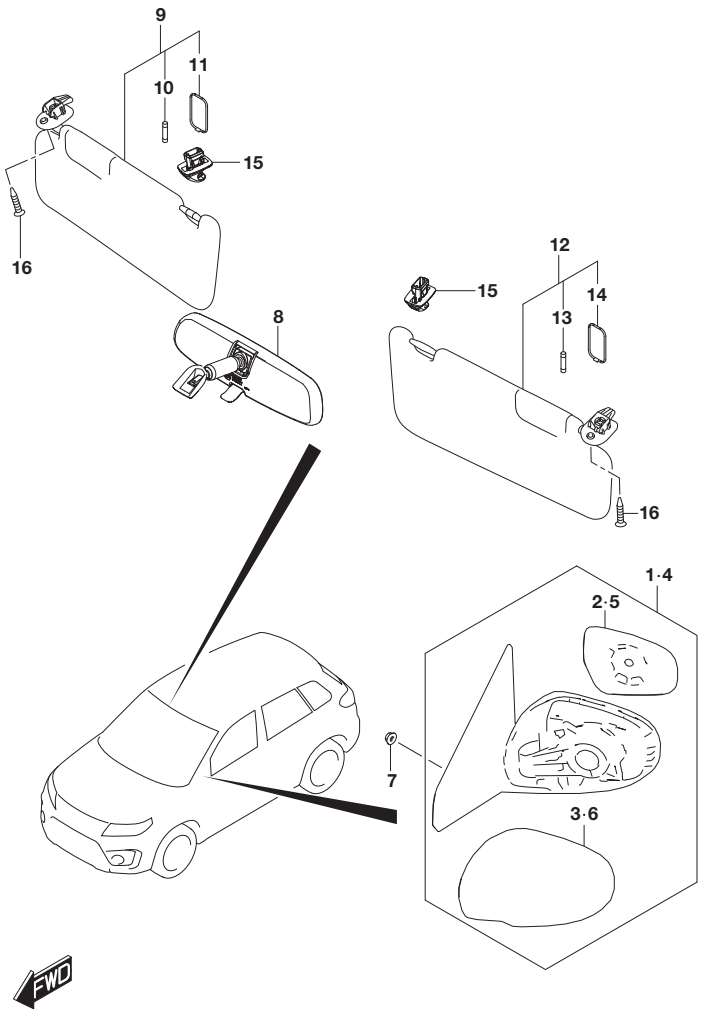

FIG.835E (4-E-4) MIRROR/SUNVISOR (SEE NOTE)

REF NO.	PART NO.	DESCRIPTION	Q'TY	REMARKS
1-14	84701-54PA1-ZNL	MIRROR ASSY, RR VIEW RH (WHITE)	1	W/OUTSIDE MIRROR HEATER: W/PAINTING
1-15	84701-54PA1-ZQN	MIRROR ASSY, RR VIEW RH (TURQUOISE)	1	W/OUTSIDE MIRROR HEATER: W/PAINTING
1-16	84701-54PA1-26U	MIRROR ASSY, RR VIEW RH (WHITE)	1	W/OUTSIDE MIRROR HEATER: W/PAINTING BODY COLOR:A6H,DBG,26U
2-1	84730-61M00	.GLASS, OUT RR VIEW MIR RH	1	N/OUTSIDE MIRROR HEATER
2-2	84730-61M20	.GLASS, OUT RR VIEW MIR RH	1	W/OUTSIDE MIRROR HEATER
3-1	84718-61M00-5PK	.COVER, MIRROR VISOR RH (BLACK)	1	N/PAINTING
3-2	84718-61M10-ZCC	.COVER, MIRROR VISOR RH (SILVER)	1	W/PAINTING
3-3	84718-61M10-ZCD	.COVER, MIRROR VISOR RH (GRAY)	1	W/PAINTING
3-4	84718-61M10-ZCE	.COVER, MIRROR VISOR RH (BLACK)	1	W/PAINTING BODY COLOR:A9G,A9H,A9L,A9N, DBF,DBH,ZCE
3-5	84718-61M10-ZCF	.COVER, MIRROR VISOR RH (RED)	1	W/PAINTING
3-6	84718-61M10-ZNL	.COVER, MIRROR VISOR RH (WHITE)	1	W/PAINTING
3-7	84718-61M10-ZQN	.COVER, MIRROR VISOR RH (TURQUOISE)	1	W/PAINTING
3-8	84718-61M10-26U	.COVER, MIRROR VISOR RH (WHITE)	1	W/PAINTING BODY COLOR:A6H,DBG,26U

NOTE : W/FENDER TURN SIGNAL:RHD:N/BLIND SPOT WARNING:
W/SUNVISOR MIRROR LAMP

FIG.835E

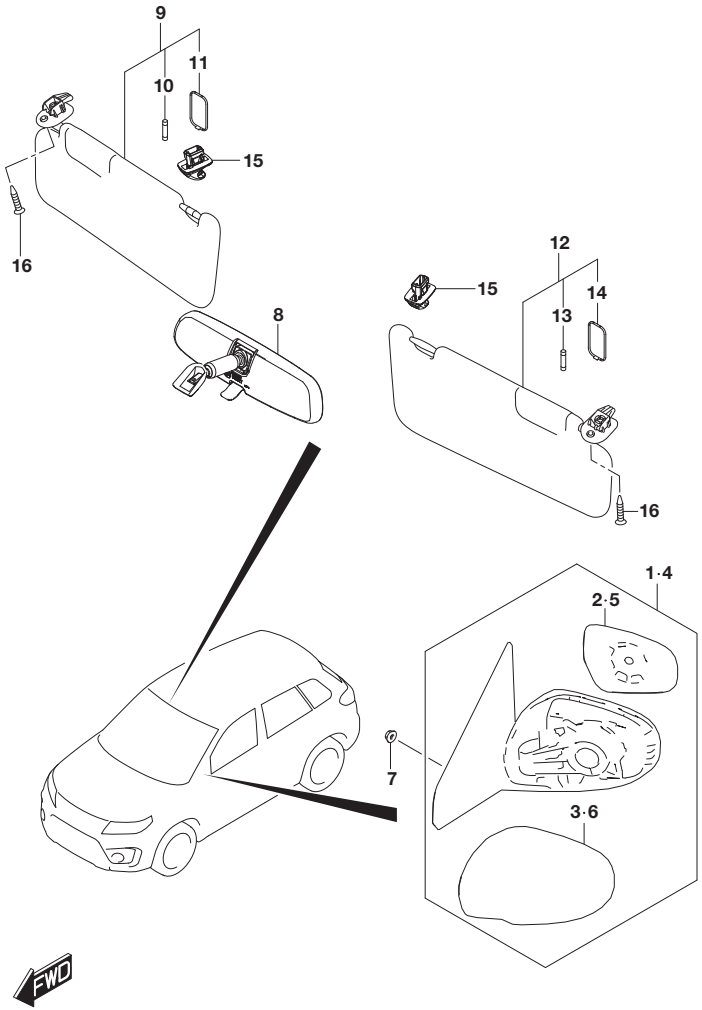

FIG.835E (4-E-5) MIRROR/SUNVISOR (SEE NOTE)

REF NO.	PART NO.	DESCRIPTION	Q'TY	REMARKS
4-1	84702-54P81	MIRROR ASSY, RR VIEW LH	1	N/OUTSIDE MIRROR HEATER: N/PAINTING
4-2	84702-54P01-ZCC	MIRROR ASSY, RR VIEW LH (SILVER)	1	N/OUTSIDE MIRROR HEATER: W/PAINTING
4-3	84702-54P01-ZCD	MIRROR ASSY, RR VIEW LH (GRAY)	1	N/OUTSIDE MIRROR HEATER: W/PAINTING
4-4	84702-54P01-ZCE	MIRROR ASSY, RR VIEW LH (BLACK)	1	N/OUTSIDE MIRROR HEATER: W/PAINTING BODY COLOR:A9G,A9H,A9L,A9N, DBF,DBH,ZCE
4-5	84702-54P01-ZCF	MIRROR ASSY, RR VIEW LH (RED)	1	N/OUTSIDE MIRROR HEATER: W/PAINTING
4-6	84702-54P01-ZNL	MIRROR ASSY, RR VIEW LH (WHITE)	1	N/OUTSIDE MIRROR HEATER: W/PAINTING
4-7	84702-54P01-ZQN	MIRROR ASSY, RR VIEW LH (TURQUOISE)	1	N/OUTSIDE MIRROR HEATER: W/PAINTING
4-8	84702-54P01-26U	MIRROR ASSY, RR VIEW LH (WHITE)	1	N/OUTSIDE MIRROR HEATER: W/PAINTING BODY COLOR:A6H,DBG,26U
4-9	84702-54PJ1	MIRROR ASSY, RR VIEW LH	1	W/OUTSIDE MIRROR HEATER: N/PAINTING
4-10	84702-54PA1-ZCC	MIRROR ASSY, RR VIEW LH (SILVER)	1	W/OUTSIDE MIRROR HEATER: W/PAINTING
4-11	84702-54PA1-ZCD	MIRROR ASSY, RR VIEW LH (GRAY)	1	W/OUTSIDE MIRROR HEATER: W/PAINTING
4-12	84702-54PA1-ZCE	MIRROR ASSY, RR VIEW LH (BLACK)	1	W/OUTSIDE MIRROR HEATER: W/PAINTING BODY COLOR:A9G,A9H,A9L,A9N, DBF,DBH,ZCE
4-13	84702-54PA1-ZCF	MIRROR ASSY, RR VIEW LH (RED)	1	W/OUTSIDE MIRROR HEATER: W/PAINTING

NOTE : W/FENDER TURN SIGNAL:RHD:N/BLIND SPOT WARNING:
W/SUNVISOR MIRROR LAMP

FIG.835E

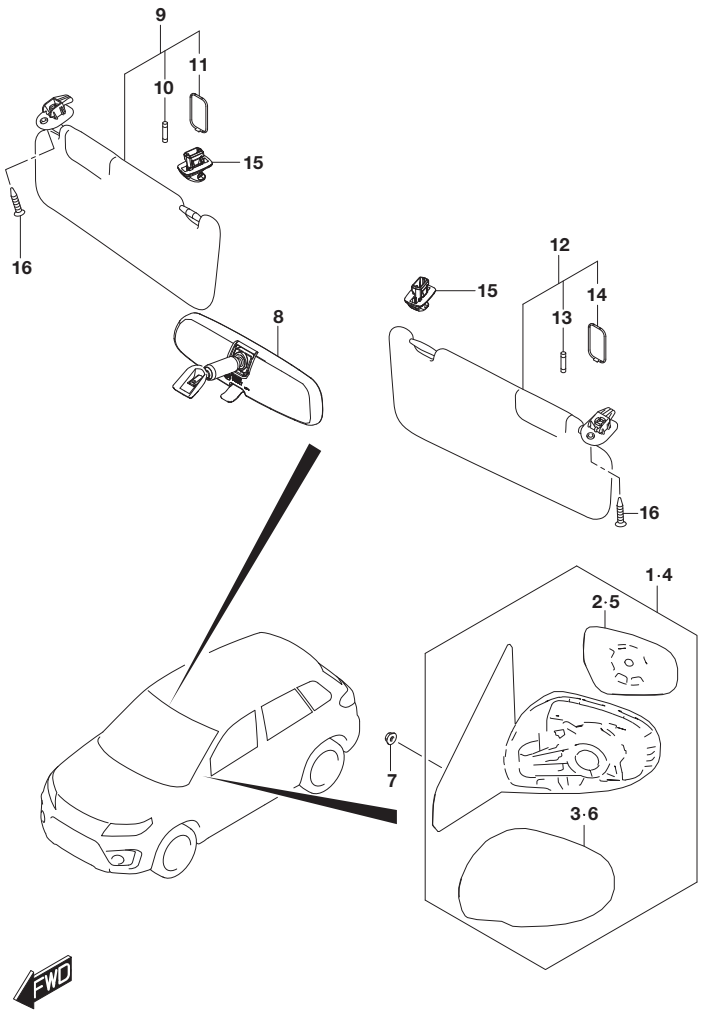

FIG.835E (4-E-6) MIRROR/SUNVISOR (SEE NOTE)

REF NO.	PART NO.	DESCRIPTION	Q'TY	REMARKS
4-14	84702-54PA1-ZNL	MIRROR ASSY, RR VIEW LH (WHITE)	1	W/OUTSIDE MIRROR HEATER: W/PAINTING
4-15	84702-54PA1-ZQN	MIRROR ASSY, RR VIEW LH (TURQUOISE)	1	W/OUTSIDE MIRROR HEATER: W/PAINTING
4-16	84702-54PA1-26U	MIRROR ASSY, RR VIEW LH (WHITE)	1	W/OUTSIDE MIRROR HEATER: W/PAINTING BODY COLOR:A6H,DBG,26U
5-1	84740-61M00	.GLASS, OUT RR VIEW MIR LH	1	N/OUTSIDE MIRROR HEATER
5-2	84740-61M50	.GLASS, OUT RR VIEW MIR LH	1	W/OUTSIDE MIRROR HEATER
6-1	84728-61M00-5PK	.COVER, MIRROR VISOR LH (BLACK)	1	N/PAINTING
6-2	84728-61M10-ZCC	.COVER, MIRROR VISOR LH (SILVER)	1	W/PAINTING
6-3	84728-61M10-ZCD	.COVER, MIRROR VISOR LH (GRAY)	1	W/PAINTING
6-4	84728-61M10-ZCE	.COVER, MIRROR VISOR LH (BLACK)	1	W/PAINTING BODY COLOR:A9G,A9H,A9L,A9N, DBF,DBH,ZCE
6-5	84728-61M10-ZCF	.COVER, MIRROR VISOR LH (RED)	1	W/PAINTING
6-6	84728-61M10-ZNL	.COVER, MIRROR VISOR LH (WHITE)	1	W/PAINTING
6-7	84728-61M10-ZQN	.COVER, MIRROR VISOR LH (TURQUOISE)	1	W/PAINTING
6-8	84728-61M10-26U	.COVER, MIRROR VISOR LH (WHITE)	1	W/PAINTING BODY COLOR:A6H,DBG,26U
7	08316-1006A	NUT	6	
8	84703-71L00	MIRROR ASSY, INS RR VIEW	1	
9	84801-54P52-6GS	SUNVISOR ASSY RH (GRAY)	1	
10	84841-61M00	.BULB, SUNVISOR	1	
11	84842-61M00	.LENS, SUNVISOR	1	
12	84802-54P52-6GS	SUNVISOR ASSY LH (GRAY)	1	
13	84841-61M00	.BULB, SUNVISOR	1	

NOTE : W/FENDER TURN SIGNAL:RHD:N/BLIND SPOT WARNING: W/SUNVISOR MIRROR LAMP

FIG.835E

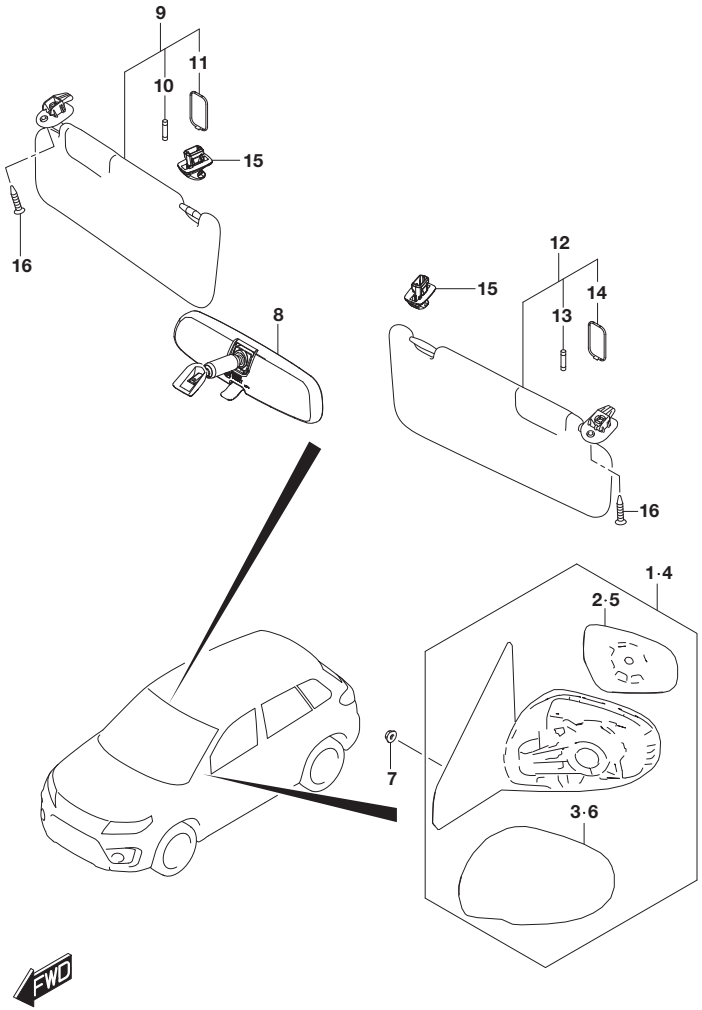

FIG.835E (4-E-7) MIRROR/SUNVISOR (SEE NOTE)

REF NO.	PART NO.	DESCRIPTION	Q'TY	REMARKS
14	84842-61M00	.LENS, SUNVISOR	1	
15	84851-85K00-6GS	HOLDER, SUNVISOR (GRAY)	2	
16	09139-05061	SCREW (5X16)	2	

NOTE : W/FENDER TURN SIGNAL:RHD:N/BLIND SPOT WARNING:
W/SUNVISOR MIRROR LAMP

FIG.835F

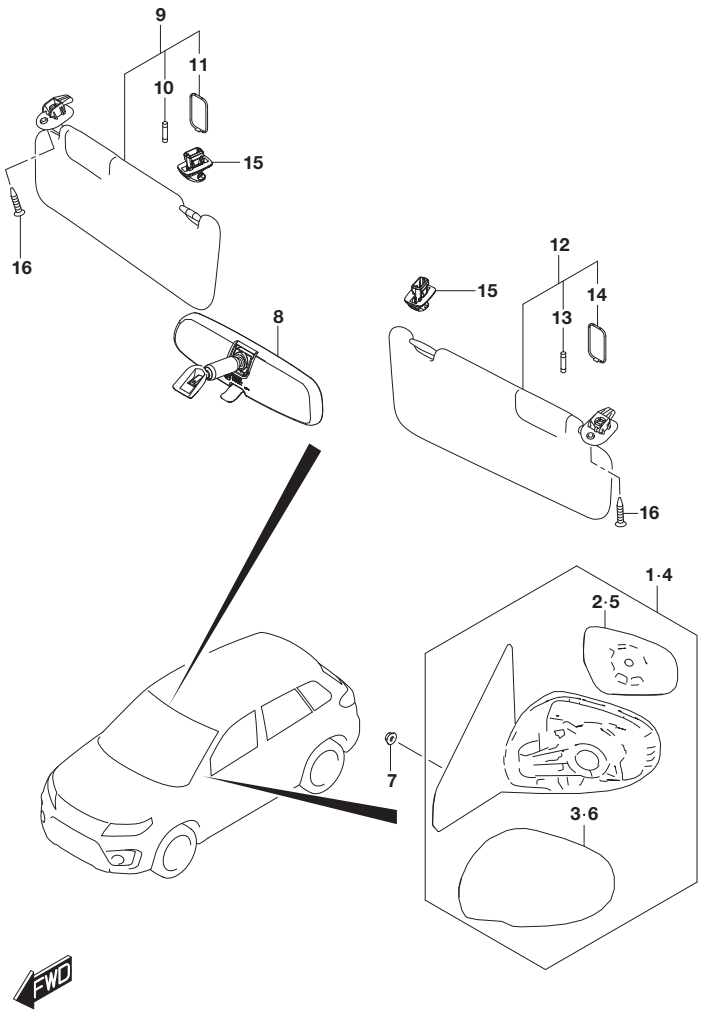

FIG.835F (4-E-8) MIRROR/SUNVISOR (SEE NOTE)

REF NO.	PART NO.	DESCRIPTION	Q'TY	REMARKS
1-1	84701-54PL0-ZCC	MIRROR ASSY, RR VIEW RH (SILVER)	1	
1-2	84701-54PL0-ZCD	MIRROR ASSY, RR VIEW RH (GRAY)	1	
1-3	84701-54PL0-ZCE	MIRROR ASSY, RR VIEW RH (BLACK)	1	BODY COLOR:A9G,A9H,A9L,A9N, DBF,DBH,ZCE
1-4	84701-54PL0-ZCF	MIRROR ASSY, RR VIEW RH (RED)	1	
1-5	84701-54PL0-ZNL	MIRROR ASSY, RR VIEW RH (WHITE)	1	
1-6	84701-54PL0-ZQN	MIRROR ASSY, RR VIEW RH (TURQUOISE)	1	
1-7	84701-54PL0-26U	MIRROR ASSY, RR VIEW RH (WHITE)	1	BODY COLOR:A6H,DBG,26U
2	84730-86R00	.GLASS, OUT RR VIEW MIR RH	1	
3-1	84718-61M10-ZCC	.COVER, MIRROR VISOR RH (SILVER)	1	
3-2	84718-61M10-ZCD	.COVER, MIRROR VISOR RH (GRAY)	1	
3-3	84718-61M10-ZCE	.COVER, MIRROR VISOR RH (BLACK)	1	BODY COLOR:A9G,A9H,A9L,A9N, DBF,DBH,ZCE
3-4	84718-61M10-ZCF	.COVER, MIRROR VISOR RH (RED)	1	
3-5	84718-61M10-ZNL	.COVER, MIRROR VISOR RH (WHITE)	1	
3-6	84718-61M10-ZQN	.COVER, MIRROR VISOR RH (TURQUOISE)	1	
3-7	84718-61M10-26U	.COVER, MIRROR VISOR RH (WHITE)	1	BODY COLOR:A6H,DBG,26U

NOTE : W/FENDER TURN SIGNAL:RHD:W/BLIND SPOT WARNING

FIG.835F

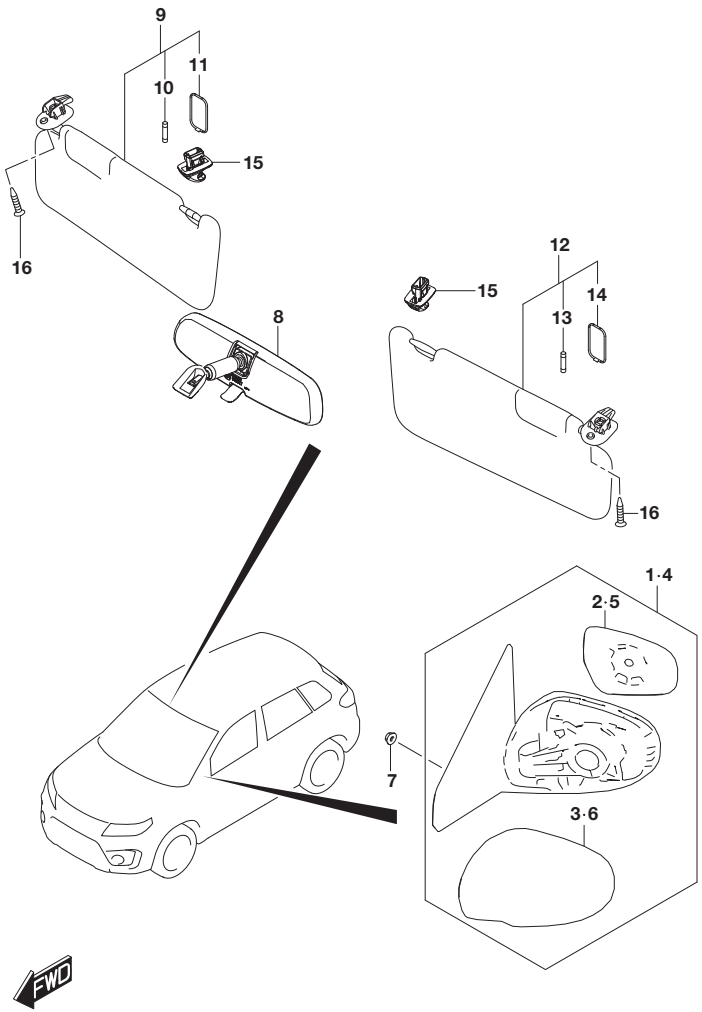

FIG.835F (4-E-9) MIRROR/SUNVISOR (SEE NOTE)

REF NO.	PART NO.	DESCRIPTION	Q'TY	REMARKS
4-1	84702-54PL0-ZCC	MIRROR ASSY, RR VIEW LH (SILVER)	1	
4-2	84702-54PL0-ZCD	MIRROR ASSY, RR VIEW LH (GRAY)	1	
4-3	84702-54PL0-ZCE	MIRROR ASSY, RR VIEW LH (BLACK)	1	BODY COLOR:A9G,A9H,A9L,A9N, DBF,DBH,ZCE
4-4	84702-54PL0-ZCF	MIRROR ASSY, RR VIEW LH (RED)	1	
4-5	84702-54PL0-ZNL	MIRROR ASSY, RR VIEW LH (WHITE)	1	
4-6	84702-54PL0-ZQN	MIRROR ASSY, RR VIEW LH (TURQUOISE)	1	
4-7	84702-54PL0-26U	MIRROR ASSY, RR VIEW LH (WHITE)	1	BODY COLOR:A6H,DBG,26U
5	84740-86R40	.GLASS, OUT RR VIEW MIR LH	1	
6-1	84728-61M10-ZCC	.COVER, MIRROR VISOR LH (SILVER)	1	
6-2	84728-61M10-ZCD	.COVER, MIRROR VISOR LH (GRAY)	1	
6-3	84728-61M10-ZCE	.COVER, MIRROR VISOR LH (BLACK)	1	BODY COLOR:A9G,A9H,A9L,A9N, DBF,DBH,ZCE
6-4	84728-61M10-ZCF	.COVER, MIRROR VISOR LH (RED)	1	
6-5	84728-61M10-ZNL	.COVER, MIRROR VISOR LH (WHITE)	1	
6-6	84728-61M10-ZQN	.COVER, MIRROR VISOR LH (TURQUOISE)	1	
6-7	84728-61M10-26U	.COVER, MIRROR VISOR LH (WHITE)	1	BODY COLOR:A6H,DBG,26U
7	08316-1006A	NUT	6	
8	84703-71L00	MIRROR ASSY, INS RR VIEW	1	
9	84801-54P52-6GS	SUNVISOR ASSY RH (GRAY)	1	
10	84841-61M00	.BULB, SUNVISOR	1	
11	84842-61M00	.LENS, SUNVISOR	1	
12	84802-54P52-6GS	SUNVISOR ASSY LH (GRAY)	1	
13	84841-61M00	.BULB, SUNVISOR	1	

NOTE : W/FENDER TURN SIGNAL:RHD:W/BLIND SPOT WARNING

FIG.835F

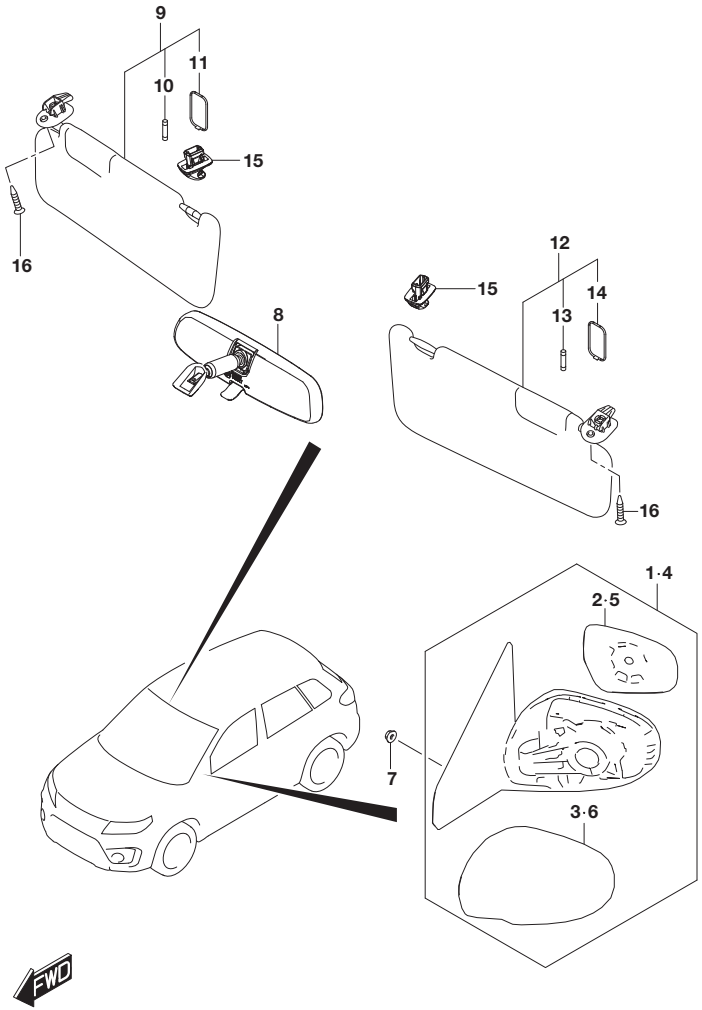

FIG.835F (4-E-10) MIRROR/SUNVISOR (SEE NOTE)

REF NO.	PART NO.	DESCRIPTION	Q'TY	REMARKS
14	84842-61M00	.LENS, SUNVISOR	1	
15	84851-85K00-6GS	HOLDER, SUNVISOR (GRAY)	2	
16	09139-05061	SCREW (5X16)	2	

NOTE : W/FENDER TURN SIGNAL:RHD:W/BLIND SPOT WARNING

FIG.835G

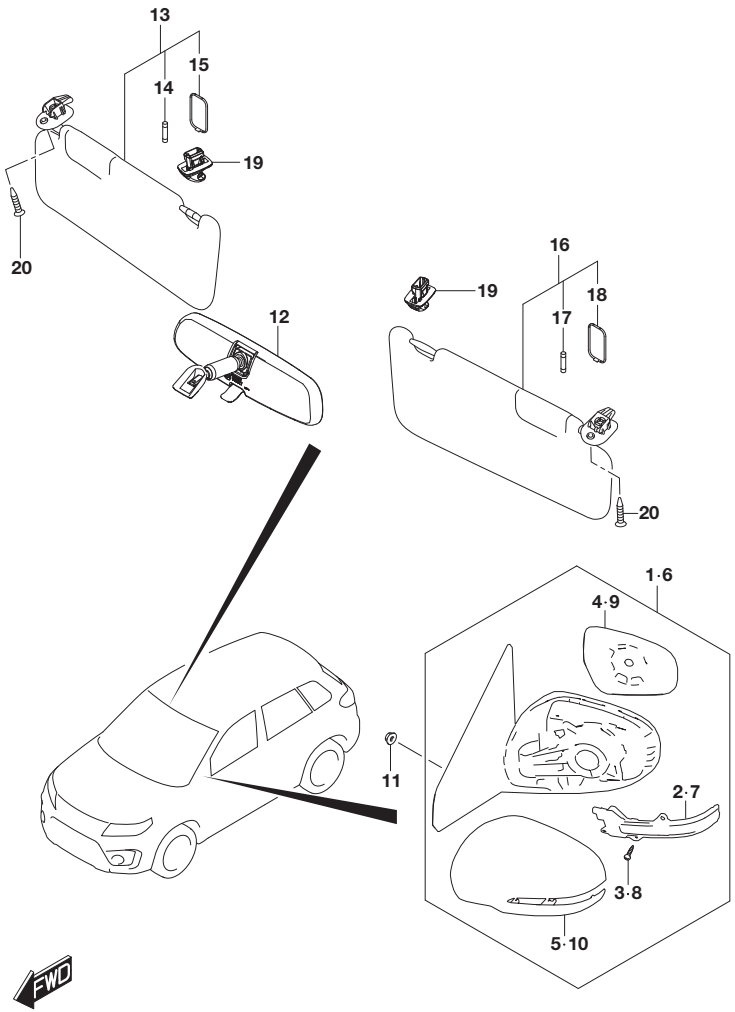

FIG.835G (4-E-11) MIRROR/SUNVISOR (W/MIRROR TURN SIGNAL)

REF NO.	PART NO.	DESCRIPTION	Q'TY	REMARKS
1-1	84701-54PP0-ZCC	MIRROR ASSY, RR VIEW RH (SILVER)	1	LHD
1-2	84701-54PP0-ZCD	MIRROR ASSY, RR VIEW RH (GRAY)	1	LHD
1-3	84701-54PP0-ZCE	MIRROR ASSY, RR VIEW RH (BLACK)	1	LHD BODY COLOR:A9G,A9H,A9L,A9N, DBF,DBH,ZCE
1-4	84701-54PP0-ZCF	MIRROR ASSY, RR VIEW RH (RED)	1	LHD
1-5	84701-54PP0-ZNL	MIRROR ASSY, RR VIEW RH (WHITE)	1	LHD
1-6	84701-54PP0-ZQN	MIRROR ASSY, RR VIEW RH (TURQUOISE)	1	LHD
1-7	84701-54PP0-26U	MIRROR ASSY, RR VIEW RH (WHITE)	1	LHD BODY COLOR:A6H,DBG,26U
1-8	84701-54PN0-ZCC	MIRROR ASSY, RR VIEW RH (SILVER)	1	RHD
1-9	84701-54PN0-ZCD	MIRROR ASSY, RR VIEW RH (GRAY)	1	RHD
1-10	84701-54PN0-ZCE	MIRROR ASSY, RR VIEW RH (BLACK)	1	RHD BODY COLOR:A9G,A9H,A9L,A9N, DBF,DBH,ZCE
1-11	84701-54PN0-ZCF	MIRROR ASSY, RR VIEW RH (RED)	1	RHD
1-12	84701-54PN0-ZNL	MIRROR ASSY, RR VIEW RH (WHITE)	1	RHD
1-13	84701-54PN0-ZQN	MIRROR ASSY, RR VIEW RH (TURQUOISE)	1	RHD
1-14	84701-54PN0-26U	MIRROR ASSY, RR VIEW RH (WHITE)	1	RHD BODY COLOR:A6H,DBG,26U
2	36410-61M00	.LAMP ASSY, SIDE TURN SIG RH	1	
3	84717-60P00	.SCREW, TURN SIGNAL LAMP	2	
4-1	84730-86R20	.GLASS, OUT RR VIEW MIR RH	1	LHD
4-2	84730-86R00	.GLASS, OUT RR VIEW MIR RH	1	RHD

FIG.835G

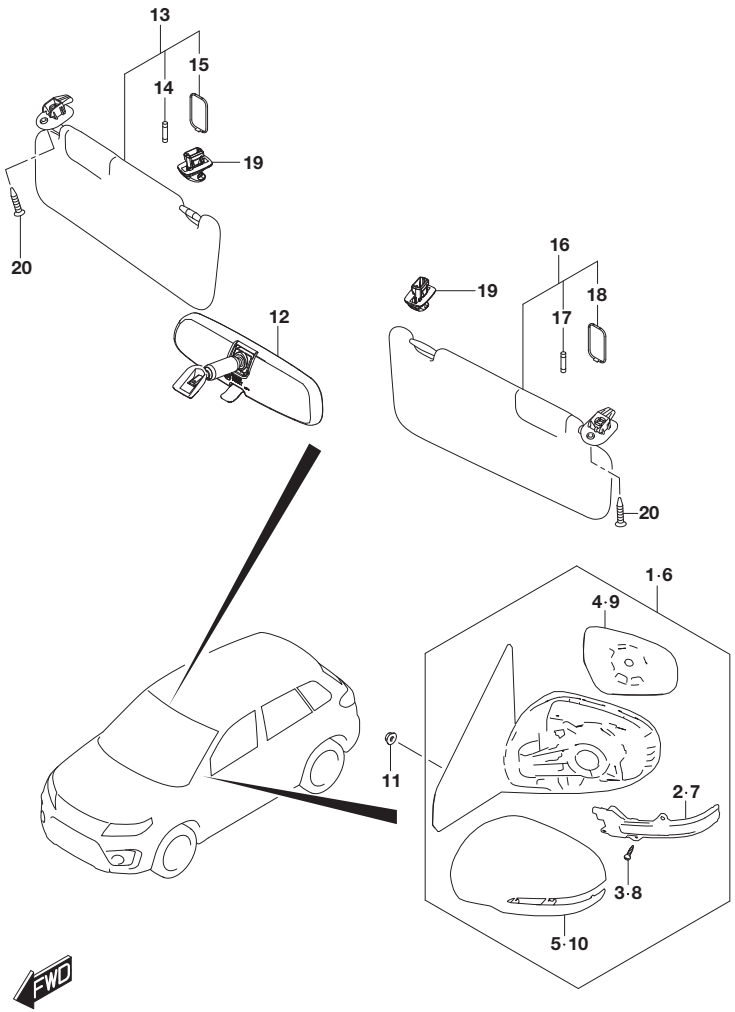

FIG.835G (4-E-12) MIRROR/SUNVISOR (W/MIRROR TURN SIGNAL)

REF NO.	PART NO.	DESCRIPTION	Q'TY	REMARKS
5-1	84718-61M20-ZCC	.COVER, MIRROR VISOR RH (SILVER)	1	
5-2	84718-61M20-ZCD	.COVER, MIRROR VISOR RH (GRAY)	1	
5-3	84718-61M20-ZCE	.COVER, MIRROR VISOR RH (BLACK)	1	BODY COLOR:A9G,A9H,A9L,A9N, DBF,DBH,ZCE
5-4	84718-61M20-ZCF	.COVER, MIRROR VISOR RH (RED)	1	
5-5	84718-61M20-ZNL	.COVER, MIRROR VISOR RH (WHITE)	1	
5-6	84718-61M20-ZQN	.COVER, MIRROR VISOR RH (TURQUOISE)	1	
5-7	84718-61M20-26U	.COVER, MIRROR VISOR RH (WHITE)	1	BODY COLOR:A6H,DBG,26U
6-1	84702-54PP0-ZCC	MIRROR ASSY, RR VIEW LH (SILVER)	1	LHD
6-2	84702-54PP0-ZCD	MIRROR ASSY, RR VIEW LH (GRAY)	1	LHD
6-3	84702-54PP0-ZCE	MIRROR ASSY, RR VIEW LH (BLACK)	1	LHD BODY COLOR:A9G,A9H,A9L,A9N, DBF,DBH,ZCE
6-4	84702-54PP0-ZCF	MIRROR ASSY, RR VIEW LH (RED)	1	LHD
6-5	84702-54PP0-ZNL	MIRROR ASSY, RR VIEW LH (WHITE)	1	LHD
6-6	84702-54PP0-ZQN	MIRROR ASSY, RR VIEW LH (TURQUOISE)	1	LHD
6-7	84702-54PP0-26U	MIRROR ASSY, RR VIEW LH (WHITE)	1	LHD BODY COLOR:A6H,DBG,26U
6-8	84702-54PN0-ZCC	MIRROR ASSY, RR VIEW LH (SILVER)	1	RHD
6-9	84702-54PN0-ZCD	MIRROR ASSY, RR VIEW LH (GRAY)	1	RHD
6-10	84702-54PN0-ZCE	MIRROR ASSY, RR VIEW LH (BLACK)	1	RHD BODY COLOR:A9G,A9H,A9L,A9N, DBF,DBH,ZCE
6-11	84702-54PN0-ZCF	MIRROR ASSY, RR VIEW LH (RED)	1	RHD
6-12	84702-54PN0-ZNL	MIRROR ASSY, RR VIEW LH (WHITE)	1	RHD
6-13	84702-54PN0-ZQN	MIRROR ASSY, RR VIEW LH (TURQUOISE)	1	RHD

FIG.835G

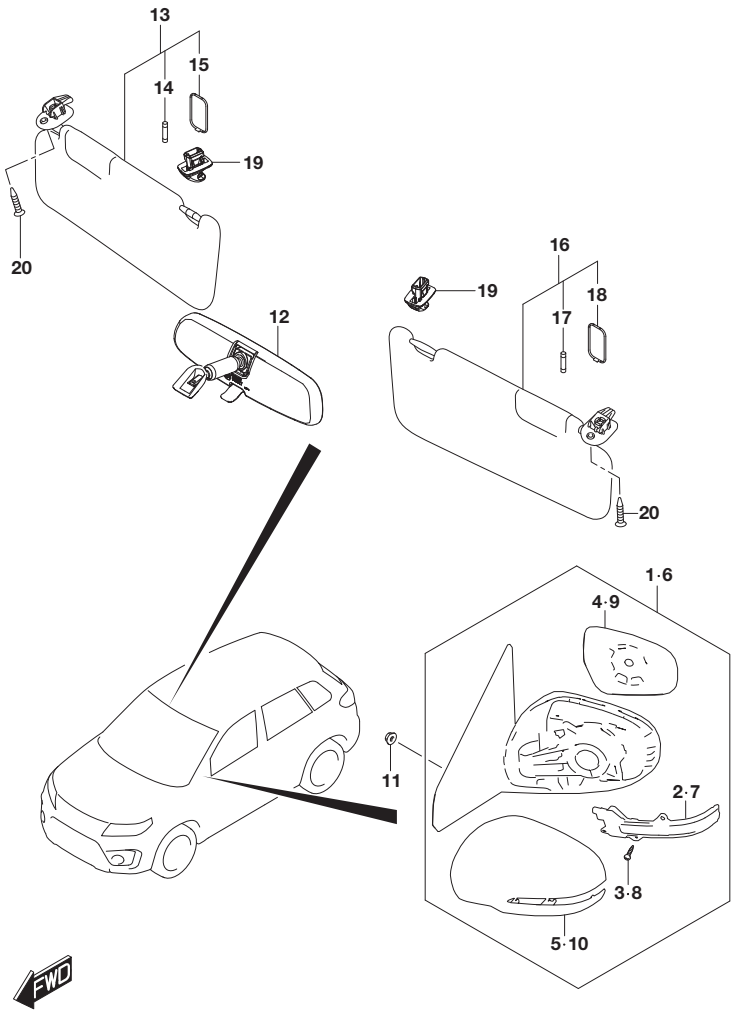

FIG.835G (4-E-13) MIRROR/SUNVISOR (W/MIRROR TURN SIGNAL)

REF NO.	PART NO.	DESCRIPTION	Q'TY	REMARKS
6-14	84702-54PN0-26U	MIRROR ASSY, RR VIEW LH (WHITE)	1	RHD BODY COLOR:A6H,DBG,26U
7	36430-61M00	.LAMP ASSY, SIDE TURN SIG LH	1	
8	84717-60P00	.SCREW, TURN SIGNAL LAMP	2	
9-1	84740-86R10	.GLASS, OUT RR VIEW MIR LH	1	LHD
9-2	84740-86R40	.GLASS, OUT RR VIEW MIR LH	1	RHD
10-1	84728-61M20-ZCC	.COVER, MIRROR VISOR LH (SILVER)	1	
10-2	84728-61M20-ZCD	.COVER, MIRROR VISOR LH (GRAY)	1	
10-3	84728-61M20-ZCE	.COVER, MIRROR VISOR LH (BLACK)	1	BODY COLOR:A9G,A9H,A9L,A9N, DBF,DBH,ZCE
10-4	84728-61M20-ZCF	.COVER, MIRROR VISOR LH (RED)	1	
10-5	84728-61M20-ZNL	.COVER, MIRROR VISOR LH (WHITE)	1	
10-6	84728-61M20-ZQN	.COVER, MIRROR VISOR LH (TURQUOISE)	1	
10-7	84728-61M20-26U	.COVER, MIRROR VISOR LH (WHITE)	1	BODY COLOR:A6H,DBG,26U
11	08316-1006A	NUT	6	
12	84703-71L00	MIRROR ASSY, INS RR VIEW	1	
13-1	84801-54P42-6GS	SUNVISOR ASSY RH (GRAY)	1	LHD
13-2	84801-54P52-6GS	SUNVISOR ASSY RH (GRAY)	1	RHD
14	84841-61M00	.BULB, SUNVISOR	1	
15	84842-61M00	.LENS, SUNVISOR	1	
16-1	84802-54P42-6GS	SUNVISOR ASSY LH (GRAY)	1	LHD
16-2	84802-54P52-6GS	SUNVISOR ASSY LH (GRAY)	1	RHD
17	84841-61M00	.BULB, SUNVISOR	1	
18	84842-61M00	.LENS, SUNVISOR	1	
19	84851-85K00-6GS	HOLDER, SUNVISOR (GRAY)	2	
20	09139-05061	SCREW (5X16)	2	

FIG.840A

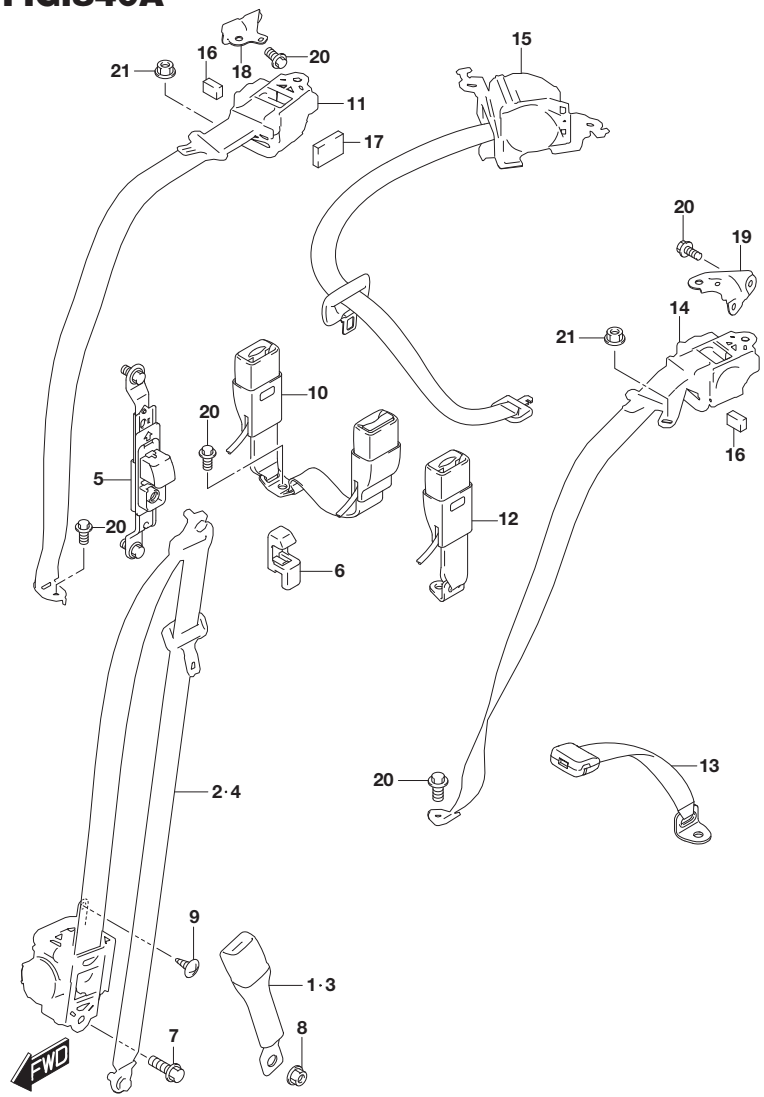

FIG.840A (4-E-14) SEAT BELT

REF NO.	PART NO.	DESCRIPTION	Q'TY	REMARKS
1-1	84910-54P10	BUCKLE ASSY, FR BELT RH	1	LHD:(K10C,K14C)
1-2	84910-54P40	BUCKLE ASSY, FR BELT RH	1	LHD:K14D
1-3	84910-54P00	BUCKLE ASSY, FR BELT RH	1	RHD:(K10C,K14C)
1-4	84910-54P30	BUCKLE ASSY, FR BELT RH	1	RHD:K14D
2	84920-54P11-BHE	TONGUE ASSY, FR BELT RH (BLACK/GRAY)	1	
3-1	84910-54P00	BUCKLE ASSY, FR BELT LH	1	LHD:(K10C,K14C)
3-2	84910-54P30	BUCKLE ASSY, FR BELT LH	1	LHD:K14D
3-3	84910-54P10	BUCKLE ASSY, FR BELT LH	1	RHD:(K10C,K14C)
3-4	84910-54P40	BUCKLE ASSY, FR BELT LH	1	RHD:K14D
4	84940-54P11-BHE	TONGUE ASSY, FR BELT LH (BLACK/GRAY)	1	
5	84990-79K00-6GS	ADJUSTER, FR SHOULDER (GRAY)	2	
6	84991-79K00-6GS	COVER, SHOULDER ADJUSTER (GRAY)	2	
7	09103-11002	BOLT (10X22)	2	
8	09159-11004	NUT	2	
9	02142-0612A	SCREW	2	
10	84950-54P01-5PK	BUCKLE ASSY, RR RH (BLACK)	1	
11	84960-54PA1-5PK	TONGUE ASSY, RR RH (BLACK)	1	
12	84970-54P01-5PK	BUCKLE ASSY, RR LH (BLACK)	1	
13	84975-54P11-5PK	BUCKLE ASSY, RR CTR (BLACK)	1	
14	84980-54PA1-5PK	TONGUE ASSY, RR LH (BLACK)	1	
15	84985-54P01-5PK	TONGUE ASSY, RR CTR (BLACK)	1	
16	84926-54P00	PAD, RR ELR	2	
17	84927-54P00	PAD, RR ELR RH	1	
18	84993-54P00	BRACKET, RR ELR RH	1	
19	84994-54P00	BRACKET, RR ELR LH	1	
20	09103-11002	BOLT (10X22)	12	
21	09159-06076	NUT	2	

FIG.848A

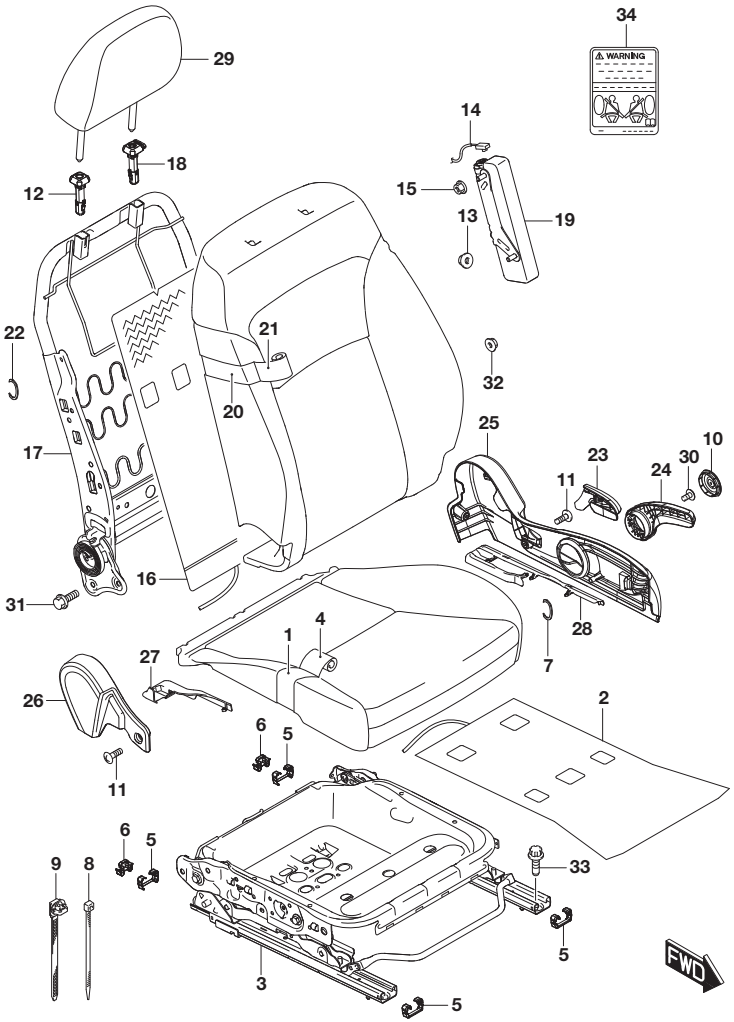

FIG.848A (4-F-2) FRONT LH SEAT (LHD:N/EASS)

REF NO.	PART NO.	DESCRIPTION	Q'TY	REMARKS
1	85160-61M01	PAD, FR CUSH	1	
2	85170-61M10	HEATER, FR CUSH	1	W/SEAT HEATER
3	85603-61M00	FRAME ASSY, FR CUSH LH	1	
4-1	85680-61M00-BAE	TRIM, FR CUSH LH (BLACK/GRAY)	1	GL
4-2	85680-61M00-BAN	TRIM, FR CUSH LH (BLACK/WHITE)	1	GL
4-3	85680-54PA1-EAR	TRIM, FR CUSH LH (BLACK/WHITE)	1	GLX
5	86652-68L00	PROTECTOR, LOWER RAIL END	4	
6	86654-68L00	PROTECTOR, UPPER RAIL END	2	
7	09387-19001	RING (OD:22.6)	11	
8-1	85137-51K00	CLAMP	2	GL:N/SEAT HEATER
8-2	85137-51K00	CLAMP	3	GL:W/SEAT HEATER
8-3	85137-51K00	CLAMP	2	GLX
9	85137-68L00	CLAMP	1	
10	85214-63J20-5PK	CAP, LIFTER LEVER (BLACK)	1	
11	85295-51K00	SCREW, RECLINING COVER	4	
12	85341-63J12-P4Z	GUIDE, HEADRESTRAINT (GRAY)	1	
13	85352-68L00	NUT, SIDE AIRBAG BRKT	1	
14	85355-61M00	HARNESS ASSY, SIDE AIRBAG	1	
15	85359-68L00	NUT, SIDE AIRBAG	2	
16	85370-61M10	HEATER, FR BACK	1	W/SEAT HEATER
17	85803-61MA0	FRAME ASSY, FR BACK LH	1	
18	85840-63J12-P4Z	GUIDE, HEADRESTRAINT (GRAY)	1	
19	85850-54P00	MODULE ASSY, SIDE AIR BAG LH	1	SEE NOTE

NOTE : SPECIAL PROCEDURES ARE REQUIRED FOR SERVICING OR REPLACING AN AIR BAG. FOR THAT REASON, ONLY A FACTORY-AUTHORIZED DEALER, WHO IS SPECIALLY TRAINED, SHOULD BE ALLOWED TO SERVICE OR REPLACE YOUR AIR BAGS.

FIG.848B(4-F-4) FRONT LH SEAT (LHD:W/EASS)
FIG.848C(4-F-6) FRONT LH SEAT (RHD:N/EASS)
FIG.848D(4-F-8) FRONT LH SEAT (RHD:W/EASS)

FIG.848A

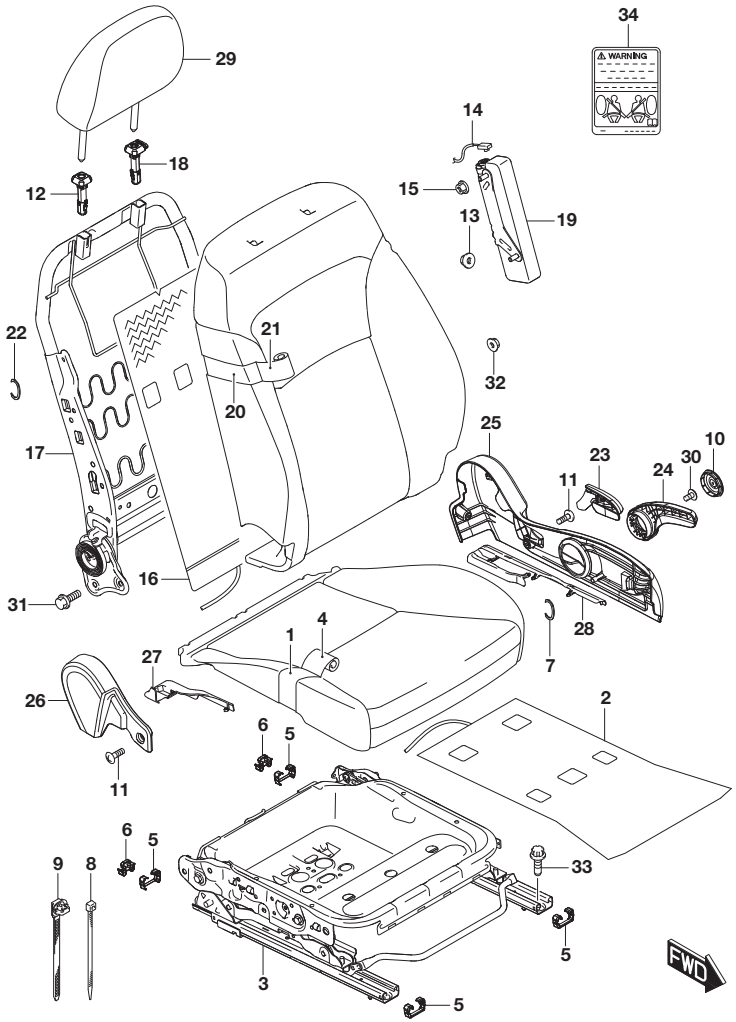

FIG.848A (4-F-3) FRONT LH SEAT (LHD:N/EASS)

REF NO.	PART NO.	DESCRIPTION	Q'TY	REMARKS
20	85860-54PA0	PAD, FR BACK LH	1	
21-1	85880-54PA1-BAE	TRIM, FR BACK LH (BLACK/GRAY)	1	GL
21-2	85880-54PA1-BAN	TRIM, FR BACK LH (BLACK/WHITE)	1	GL
21-3	85880-54PK1-EAR	TRIM, FR BACK LH (BLACK/WHITE)	1	GLX
22	09387-19001	RING (OD:22.6)	6	
23	85711-65JA0-5PK	KNOB, RCLNG LH (BLACK)	1	
24	85713-65J00-5PK	LEVER, SEAT LIFTER LH (BLACK)	1	
25	85721-68L10-5PK	COVER, FR RCLNG OUTSIDE LH (BLACK)	1	
26	85741-68L00-5PK	COVER, FR RCLNG INSIDE LH (BLACK)	1	
27	85743-61M00-5PK	COVER, RR RISER INSIDE LH (BLACK)	1	
28	85744-61M00-5PK	COVER, RR RISER OUTSIDE LH (BLACK)	1	
29-1	86401-61M00-AN4	HEADRESTRAINT ASSY (BLACK/WHITE)	1	GL
29-2	86401-61M00-PET	HEADRESTRAINT ASSY (BLACK)	1	GL
29-3	86401-61MA0-ANT	HEADRESTRAINT ASSY (BLACK/WHITE)	1	GLX
30	09132-05043	SCREW (5X10)	2	
31	01550-1016A	BOLT	2	
32	08316-1010A	NUT	2	
33	09119-08097	BOLT (8X25)	4	
34	85354-59JC1	LABEL, SIDE AIRBAG	1	ENGLISH

FIG.848B

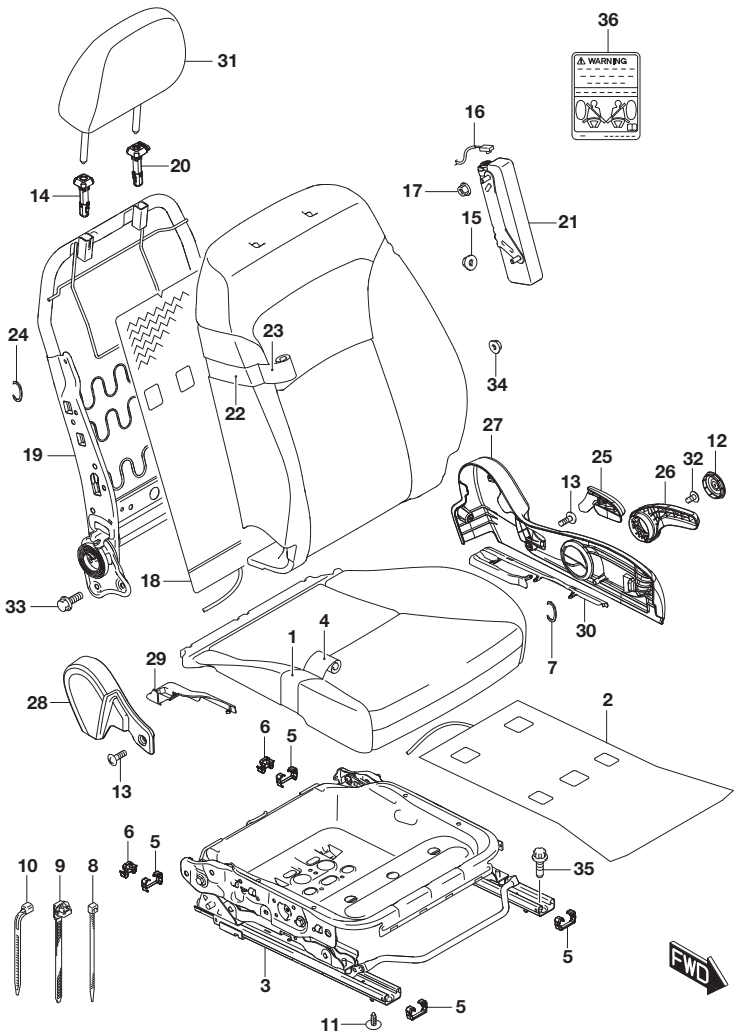

FIG.848B (4-F-4) FRONT LH SEAT (LHD:W/EASS)

REF NO.	PART NO.	DESCRIPTION	Q'TY	REMARKS
1	85160-61M01	PAD, FR CUSH	1	
2	85170-61M10	HEATER, FR CUSH	1	W/SEAT HEATER
3	85603-74S00	FRAME ASSY, FR CUSH LH	1	
4-1	85680-74S00-BAE	TRIM, FR CUSH LH (BLACK/GRAY)	1	GL
4-2	85680-74S00-BAN	TRIM, FR CUSH LH (BLACK/WHITE)	1	GL
4-3	85680-74SA1-EAR	TRIM, FR CUSH LH (BLACK/WHITE)	1	GLX
5	86652-68L00	PROTECTOR, LOWER RAIL END	4	
6	86654-68L00	PROTECTOR, UPPER RAIL END	2	
7	09387-19001	RING (OD:22.6)	11	
8	85137-51K00	CLAMP	2	
9	85137-68L00	CLAMP	1	
10	85138-51K00	CLAMP	5	
11	85139-74S00	CLIP	2	
12	85214-63J20-5PK	CAP, LIFTER LEVER (BLACK)	1	
13	85295-51K00	SCREW, RECLINING COVER	4	
14	85341-63J12-P4Z	GUIDE, HEADRESTRAINT (GRAY)	1	
15	85352-68L00	NUT, SIDE AIRBAG BRKT	1	
16	85355-74S00	HARNESS ASSY, SIDE AIRBAG	1	
17	85359-68L00	NUT, SIDE AIRBAG	2	
18	85370-61M20	HEATER, FR BACK	1	W/SEAT HEATER
19	85803-61MA0	FRAME ASSY, FR BACK LH	1	
20	85840-63J12-P4Z	GUIDE, HEADRESTRAINT (GRAY)	1	
21	85850-54P00	MODULE ASSY, SIDE AIR BAG LH	1	SEE NOTE
22	85860-54PA0	PAD, FR BACK LH	1	
23-1	85880-54PA1-BAE	TRIM, FR BACK LH (BLACK/GRAY)	1	GL
23-2	85880-54PA1-BAN	TRIM, FR BACK LH (BLACK/WHITE)	1	GL
23-3	85880-54PK1-EAR	TRIM, FR BACK LH (BLACK/WHITE)	1	GLX
24	09387-19001	RING (OD:22.6)	6	
25	85711-65JA0-5PK	KNOB, RCLNG LH (BLACK)	1	

NOTE : SPECIAL PROCEDURES ARE REQUIRED FOR SERVICING OR REPLACING AN AIR BAG. FOR THAT REASON, ONLY A FACTORY-AUTHORIZED DEALER, WHO IS SPECIALLY TRAINED, SHOULD BE ALLOWED TO SERVICE OR REPLACE YOUR AIR BAGS.

FIG.848B

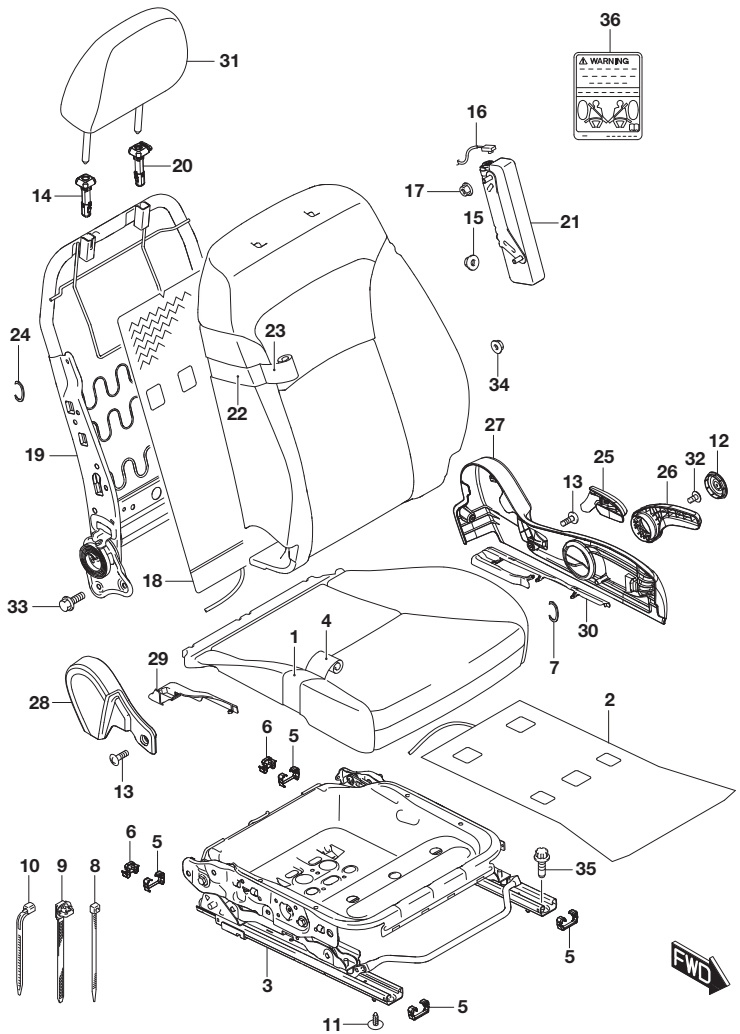

FIG.848B (4-F-5) FRONT LH SEAT (LHD:W/EASS)

REF NO.	PART NO.	DESCRIPTION	Q'TY	REMARKS
26	85713-65J00-5PK	LEVER, SEAT LIFTER LH (BLACK)	1	
27	85721-68L10-5PK	COVER, FR RCLNG OUTSIDE LH (BLACK)	1	
28	85741-68L00-5PK	COVER, FR RCLNG INSIDE LH (BLACK)	1	
29	85743-61M00-5PK	COVER, RR RISER INSIDE LH (BLACK)	1	
30	85744-61M00-5PK	COVER, RR RISER OUTSIDE LH (BLACK)	1	
31-1	86401-61M00-AN4	HEADRESTRAINT ASSY (BLACK/WHITE)	1	GL
31-2	86401-61M00-PET	HEADRESTRAINT ASSY (BLACK)	1	GL
31-3	86401-61MA0-ANT	HEADRESTRAINT ASSY (BLACK/WHITE)	1	GLX
32	09132-05043	SCREW (5X10)	2	
33	01550-1016A	BOLT	2	
34	08316-1010A	NUT	2	
35	09119-08097	BOLT (8X25)	4	
36	85354-59JC1	LABEL, SIDE AIRBAG	1	ENGLISH

FIG.848C

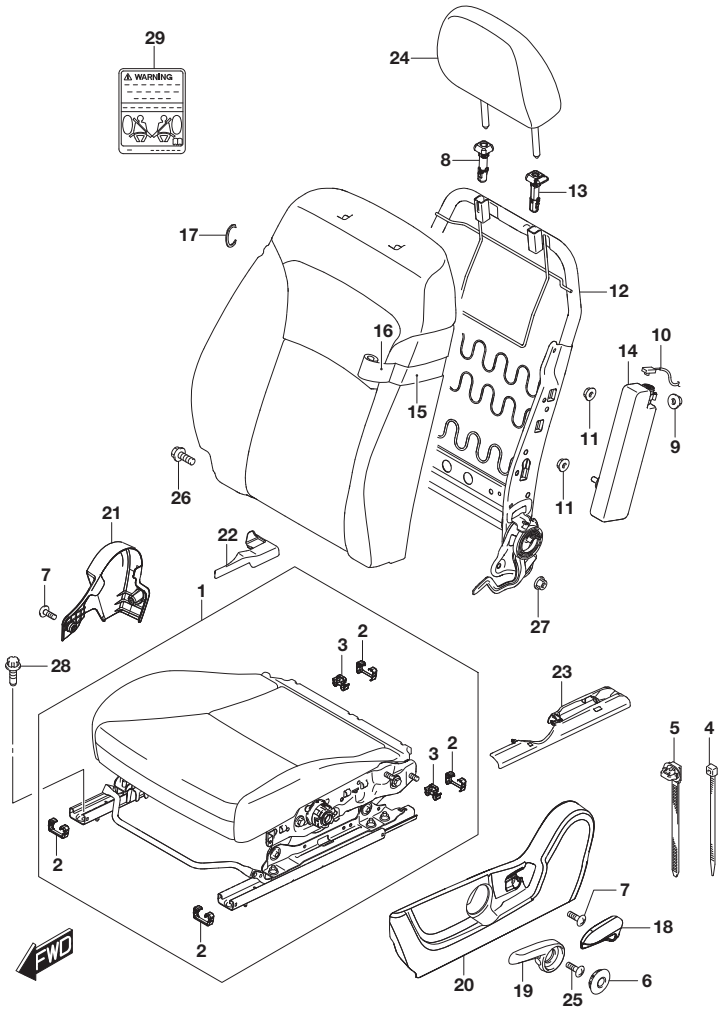

FIG.848C (4-F-6) FRONT LH SEAT (RHD:N/EASS)

REF NO.	PART NO.	DESCRIPTION	Q'TY	REMARKS
1-1	85102-61M31-BAE	CUSHION ASSY, FR LH (BLACK/GRAY)	1	GL
1-2	85102-61M31-BAN	CUSHION ASSY, FR LH (BLACK/WHITE)	1	GL
1-3	85102-54PC1-EAR	CUSHION ASSY, FR LH (BLACK/WHITE)	1	GLX
2	86652-68L00	.PROTECTOR, LOWER RAIL END	4	
3	86654-68L00	.PROTECTOR, UPPER RAIL END	2	
4	85137-51K00	CLAMP	3	GL
5	85137-68L00	CLAMP	1	
6	85214-63J20-5PK	CAP, LIFTER LEVER (BLACK)	1	
7	85295-51K00	SCREW, RECLINING COVER	4	
8	85341-63J12-P4Z	GUIDE, HEADRESTRAINT (GRAY)	1	
9	85352-68L00	NUT, SIDE AIRBAG BRKT	1	
10	85355-61M00	HARNESS ASSY, SIDE AIRBAG	1	
11	85359-68L00	NUT, SIDE AIRBAG	2	
12	85803-61MA0	FRAME ASSY, FR BACK LH	1	
13	85840-63J12-P4Z	GUIDE, HEADRESTRAINT (GRAY)	1	
14	85850-54P00	MODULE ASSY, SIDE AIR BAG LH	1	SEE NOTE
15	85860-54PA0	PAD, FR BACK LH	1	
16-1	85880-54PB1-BAE	TRIM, FR BACK LH (BLACK/GRAY)	1	GL
16-2	85880-54PB1-BAN	TRIM, FR BACK LH (BLACK/WHITE)	1	GL
16-3	85880-54PL1-EAR	TRIM, FR BACK LH (BLACK/WHITE)	1	GLX
17	09387-19001	RING (OD:22.6)	6	
18	85711-65JA0-5PK	KNOB, RCLNG LH (BLACK)	1	
19	85713-65J00-5PK	LEVER, SEAT LIFTER LH (BLACK)	1	
20	85721-68L10-5PK	COVER, FR RCLNG OUTSIDE LH (BLACK)	1	

NOTE : SPECIAL PROCEDURES ARE REQUIRED FOR SERVICING OR REPLACING AN AIR BAG. FOR THAT REASON, ONLY A FACTORY-AUTHORIZED DEALER, WHO IS SPECIALLY TRAINED, SHOULD BE ALLOWED TO SERVICE OR REPLACE YOUR AIR BAGS.

APK414-3 P22 848C
FRONT LH SEAT (3)

FIG.848C

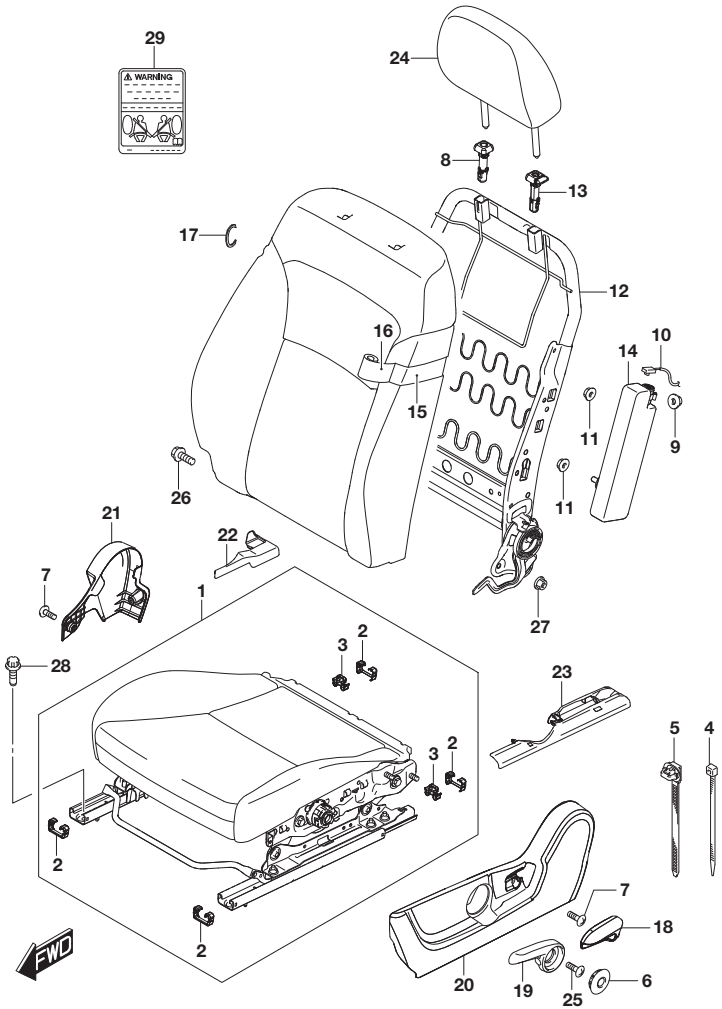

FIG.848C (4-F-7) FRONT LH SEAT (RHD:N/EASS)

REF NO.	PART NO.	DESCRIPTION	Q'TY	REMARKS
21	85741-68L00-5PK	COVER, FR RCLNG INSIDE LH (BLACK)	1	
22	85743-61M00-5PK	COVER, RR RISER INSIDE LH (BLACK)	1	
23	85744-61M00-5PK	COVER, RR RISER OUTSIDE LH (BLACK)	1	
24-1	86401-61M00-AN4	HEADRESTRAINT ASSY (BLACK/WHITE)	1	GL
24-2	86401-61M00-PET	HEADRESTRAINT ASSY (BLACK)	1	GL
24-3	86401-61MA0-ANT	HEADRESTRAINT ASSY (BLACK/WHITE)	1	GLX
25	09132-05043	SCREW (5X10)	2	
26	01550-1016A	BOLT	2	
27	08316-1010A	NUT	2	
28	09119-08097	BOLT (8X25)	4	
29	85354-59JC1	LABEL, SIDE AIRBAG	1	

APK414-3 P22 848C
FRONT LH SEAT (3)

FIG.848D

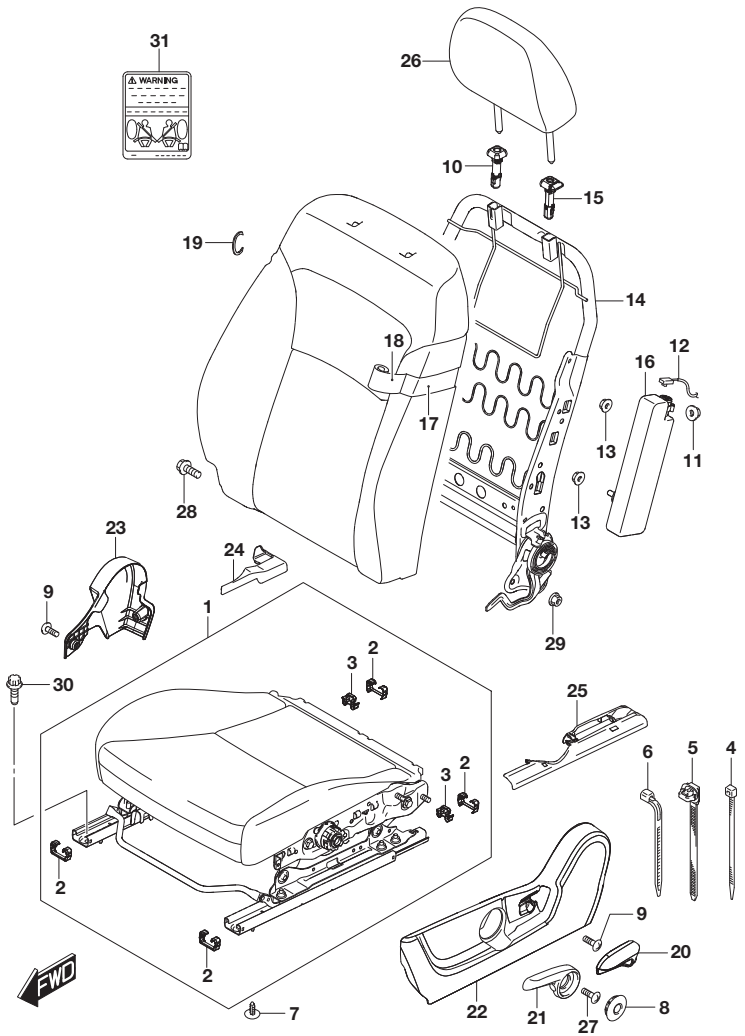

FIG.848D (4-F-8) FRONT LH SEAT (RHD:W/EASS)

REF NO.	PART NO.	DESCRIPTION	Q'TY	REMARKS
1-1	85102-74S20-BAE	CUSHION ASSY, FR LH (BLACK/GRAY)	1	GL
1-2	85102-74S20-BAN	CUSHION ASSY, FR LH (BLACK/WHITE)	1	GL
1-3	85102-74SC1-EAR	CUSHION ASSY, FR LH (BLACK/WHITE)	1	GLX
2	86652-68L00	.PROTECTOR, LOWER RAIL END	4	
3	86654-68L00	.PROTECTOR, UPPER RAIL END	2	
4	85137-51K00	CLAMP	2	
5	85137-68L00	CLAMP	1	
6	85138-51K00	CLAMP	5	
7	85139-74S00	CLIP	2	
8	85214-63J20-5PK	CAP, LIFTER LEVER (BLACK)	1	
9	85295-51K00	SCREW, RECLINING COVER	4	
10	85341-63J12-P4Z	GUIDE, HEADRESTRAINT (GRAY)	1	
11	85352-68L00	NUT, SIDE AIRBAG BRKT	1	
12	85355-74S00	HARNESS ASSY, SIDE AIRBAG	1	
13	85359-68L00	NUT, SIDE AIRBAG	2	
14	85803-61MA0	FRAME ASSY, FR BACK LH	1	
15	85840-63J12-P4Z	GUIDE, HEADRESTRAINT (GRAY)	1	
16	85850-54P00	MODULE ASSY, SIDE AIR BAG LH	1	SEE NOTE
17	85860-54PA0	PAD, FR BACK LH	1	
18-1	85880-54PB1-BAE	TRIM, FR BACK LH (BLACK/GRAY)	1	GL
18-2	85880-54PB1-BAN	TRIM, FR BACK LH (BLACK/WHITE)	1	GL
18-3	85880-54PL1-EAR	TRIM, FR BACK LH (BLACK/WHITE)	1	GLX
19	09387-19001	RING (OD:22.6)	6	
20	85711-65JA0-5PK	KNOB, RCLNG LH (BLACK)	1	
21	85713-65J00-5PK	LEVER, SEAT LIFTER LH (BLACK)	1	

NOTE : SPECIAL PROCEDURES ARE REQUIRED FOR SERVICING OR REPLACING AN AIR BAG. FOR THAT REASON, ONLY A FACTORY-AUTHORIZED DEALER, WHO IS SPECIALLY TRAINED, SHOULD BE ALLOWED TO SERVICE OR REPLACE YOUR AIR BAGS.

FIG.848D

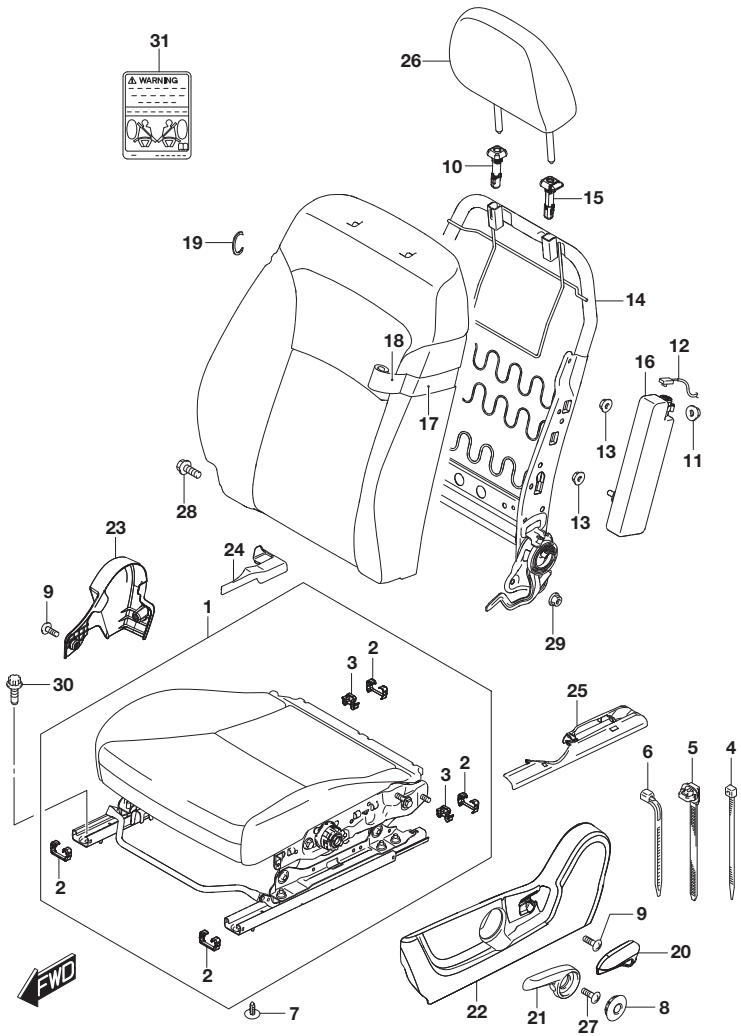

FIG.848D (4-F-9) FRONT LH SEAT (RHD:W/EASS)

REF NO.	PART NO.	DESCRIPTION	Q'TY	REMARKS
22	85721-68L10-5PK	COVER, FR RCLNG OUTSIDE LH (BLACK)	1	
23	85741-68L00-5PK	COVER, FR RCLNG INSIDE LH (BLACK)	1	
24	85743-61M00-5PK	COVER, RR RISER INSIDE LH (BLACK)	1	
25	85744-61M00-5PK	COVER, RR RISER OUTSIDE LH (BLACK)	1	
26-1	86401-61M00-AN4	HEADRESTRAINT ASSY (BLACK/WHITE)	1	GL
26-2	86401-61M00-PET	HEADRESTRAINT ASSY (BLACK)	1	GL
26-3	86401-61MA0-ANT	HEADRESTRAINT ASSY (BLACK/WHITE)	1	GLX
27	09132-05043	SCREW (5X10)	2	
28	01550-1016A	BOLT	2	
29	08316-1010A	NUT	2	
30	09119-08097	BOLT (8X25)	4	
31	85354-59JC1	LABEL, SIDE AIRBAG	1	

FIG.849A

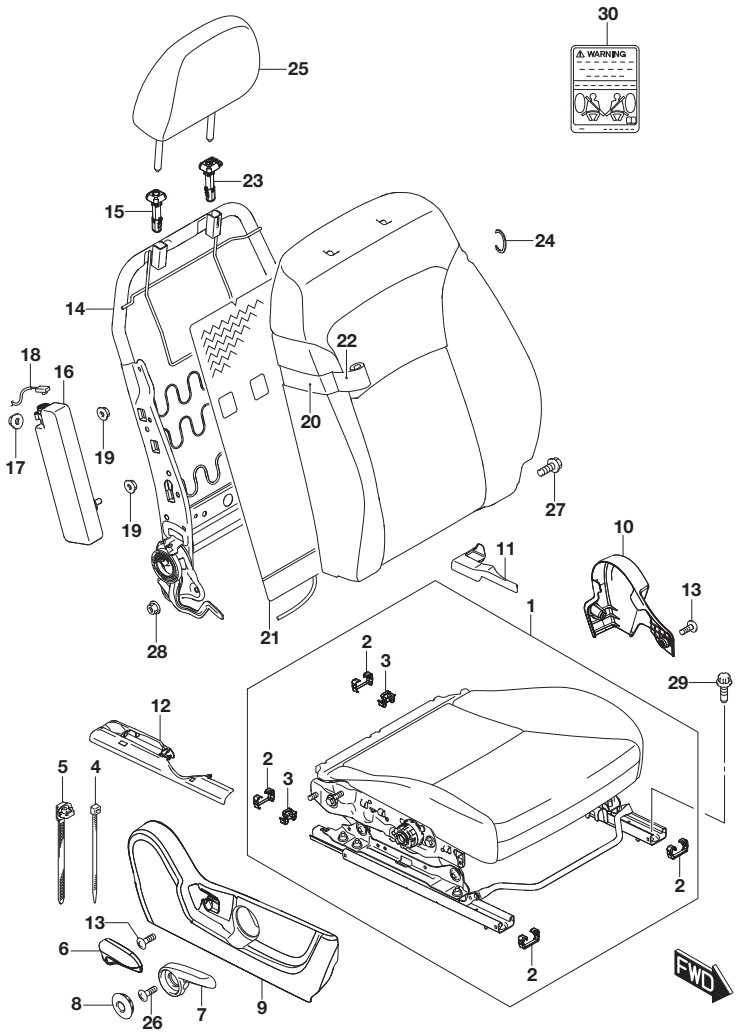

FIG.849A (4-F-10) FRONT RH SEAT (LHD:N/EASS)

REF NO.	PART NO.	DESCRIPTION	Q'TY	REMARKS
1-1	85101-61M31-BAE	CUSHION ASSY, FR RH (BLACK/GRAY)	1	GL:N/SEAT HEATER
1-2	85101-61M31-BAN	CUSHION ASSY, FR RH (BLACK/WHITE)	1	GL:N/SEAT HEATER
1-3	85101-61M63-BAE	CUSHION ASSY, FR RH (BLACK/GRAY)	1	GL:W/SEAT HEATER
1-4	85101-61M63-BAN	CUSHION ASSY, FR RH (BLACK/WHITE)	1	GL:W/SEAT HEATER
1-5	85101-54PC1-EAR	CUSHION ASSY, FR RH (BLACK/WHITE)	1	GLX:N/SEAT HEATER
1-6	85101-54PD2-EAR	CUSHION ASSY, FR RH (BLACK/WHITE)	1	GLX:W/SEAT HEATER
2	86652-68L00	.PROTECTOR, LOWER RAIL END	4	
3	86654-68L00	.PROTECTOR, UPPER RAIL END	2	
4-1	85137-51K00	CLAMP	3	GL
4-2	85137-51K00	CLAMP	3	GLX:W/SEAT HEATER
5	85137-68L00	CLAMP	1	
6	85211-65JA0-5PK	KNOB, RCLNG RH (BLACK)	1	
7	85213-65J00-5PK	LEVER, SEAT LIFTER (BLACK)	1	
8	85214-63J20-5PK	CAP, LIFTER LEVER (BLACK)	1	
9	85221-68L10-5PK	COVER, FR RCLNG OUTSIDE RH (BLACK)	1	
10	85241-68L00-5PK	COVER, FR RCLNG INSIDE RH (BLACK)	1	
11	85243-61M00-5PK	COVER, RR RISER INSIDE RH (BLACK)	1	
12	85244-61M00-5PK	COVER, RR RISER OUTSIDE RH (BLACK)	1	
13	85295-51K00	SCREW, RECLINING COVER	4	
14	85303-61MA0	FRAME ASSY, FR BACK RH	1	

FIG.849B(4-F-12) FRONT RH SEAT (LHD:W/EASS)
FIG.849C(4-F-14) FRONT RH SEAT (RHD:N/EASS)
FIG.849D(4-G-2) FRONT RH SEAT (RHD:W/EASS)

FIG.849A

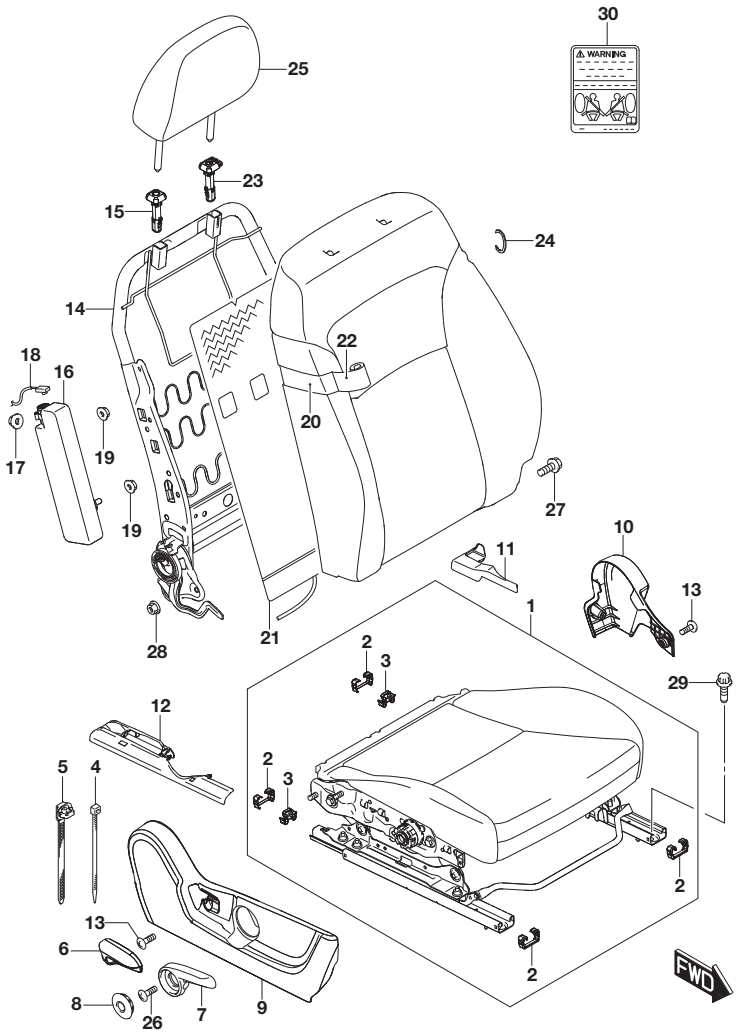

FIG.849A (4-F-11) FRONT RH SEAT (LHD:N/EASS)

REF NO.	PART NO.	DESCRIPTION	Q'TY	REMARKS
15	85341-63J12-P4Z	GUIDE, HEADRESTRAINT (GRAY)	1	
16	85350-54P00	MODULE ASSY, SIDE AIR BAG RH	1	SEE NOTE
17	85352-68L00	NUT, SIDE AIRBAG BRKT	1	
18	85355-61M00	HARNESS ASSY, SIDE AIRBAG	1	
19	85359-68L00	NUT, SIDE AIRBAG	2	
20	85360-54PA0	PAD, FR BACK RH	1	
21	85370-61M10	HEATER, FR BACK	1	W/SEAT HEATER
22-1	85380-54PB1-BAE	TRIM, FR BACK RH (BLACK/GRAY)	1	GL
22-2	85380-54PB1-BAN	TRIM, FR BACK RH (BLACK/WHITE)	1	GL
22-3	85380-54PL1-EAR	TRIM, FR BACK RH (BLACK/WHITE)	1	GLX
23	85840-63J12-P4Z	GUIDE, HEADRESTRAINT (GRAY)	1	
24	09387-19001	RING (OD:22.6)	6	
25-1	86401-61M00-AN4	HEADRESTRAINT ASSY (BLACK/WHITE)	1	GL
25-2	86401-61M00-PET	HEADRESTRAINT ASSY (BLACK)	1	GL
25-3	86401-61MA0-ANT	HEADRESTRAINT ASSY (BLACK/WHITE)	1	GLX
26	09132-05043	SCREW (5X10)	2	
27	01550-1016A	BOLT	2	
28	08316-1010A	NUT	2	
29	09119-08097	BOLT (8X25)	4	
30	85354-59JC1	LABEL, SIDE AIRBAG	1	ENGLISH

NOTE : SPECIAL PROCEDURES ARE REQUIRED FOR SERVICING OR REPLACING AN AIR BAG. FOR THAT REASON, ONLY A FACTORY-AUTHORIZED DEALER, WHO IS SPECIALLY TRAINED, SHOULD BE ALLOWED TO SERVICE OR REPLACE YOUR AIR BAGS.

FIG.849B

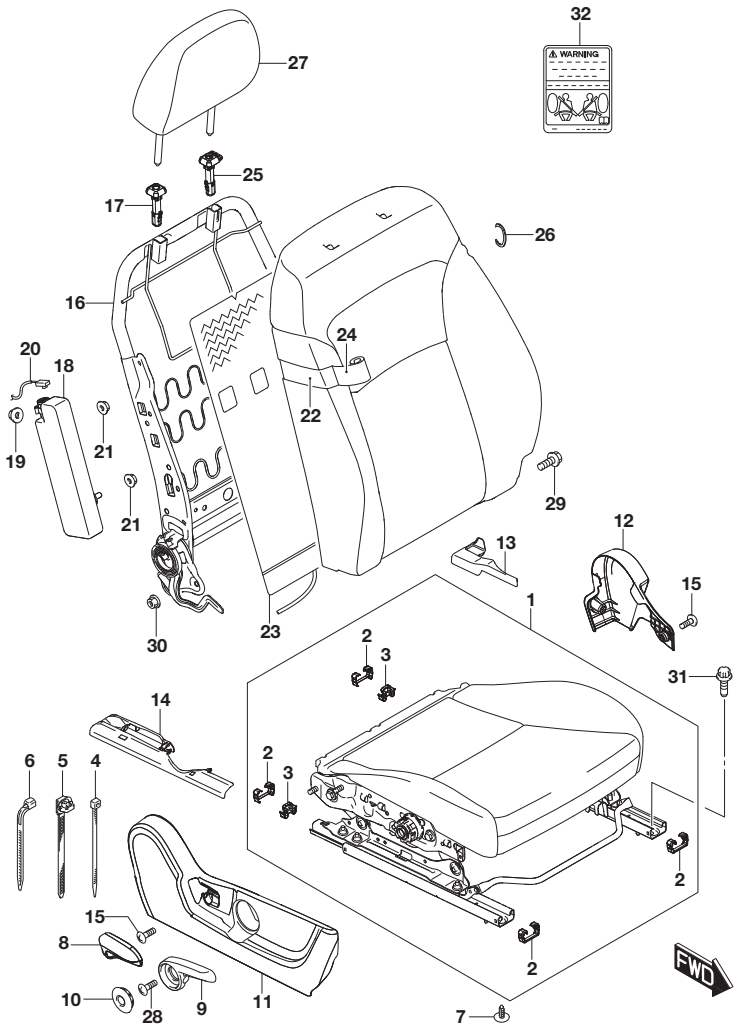

FIG.849B (4-F-12) FRONT RH SEAT (LHD:W/EASS)

REF NO.	PART NO.	DESCRIPTION	Q'TY	REMARKS
1-1	85101-74S20-BAE	CUSHION ASSY, FR RH (BLACK/GRAY)	1	GL:N/SEAT HEATER
1-2	85101-74S20-BAN	CUSHION ASSY, FR RH (BLACK/WHITE)	1	GL:N/SEAT HEATER
1-3	85101-74S30-BAE	CUSHION ASSY, FR RH (BLACK/GRAY)	1	GL:W/SEAT HEATER
1-4	85101-74S30-BAN	CUSHION ASSY, FR RH (BLACK/WHITE)	1	GL:W/SEAT HEATER
1-5	85101-74SC1-EAR	CUSHION ASSY, FR RH (BLACK/WHITE)	1	GLX:N/SEAT HEATER
1-6	85101-74SD1-EAR	CUSHION ASSY, FR RH (BLACK/WHITE)	1	GLX:W/SEAT HEATER
2	86652-68L00	.PROTECTOR, LOWER RAIL END	4	
3	86654-68L00	.PROTECTOR, UPPER RAIL END	2	
4	85137-51K00	CLAMP	2	
5	85137-68L00	CLAMP	1	
6	85138-51K00	CLAMP	5	
7	85139-74S00	CLIP	2	
8	85211-65JA0-5PK	KNOB, RCLNG RH (BLACK)	1	
9	85213-65J00-5PK	LEVER, SEAT LIFTER (BLACK)	1	
10	85214-63J20-5PK	CAP, LIFTER LEVER (BLACK)	1	
11	85221-68L10-5PK	COVER, FR RCLNG OUTSIDE RH (BLACK)	1	
12	85241-68L00-5PK	COVER, FR RCLNG INSIDE RH (BLACK)	1	
13	85243-61M00-5PK	COVER, RR RISER INSIDE RH (BLACK)	1	
14	85244-61M00-5PK	COVER, RR RISER OUTSIDE RH (BLACK)	1	
15	85295-51K00	SCREW, RECLINING COVER	4	
16	85303-61MA0	FRAME ASSY, FR BACK RH	1	
17	85341-63J12-P4Z	GUIDE, HEADRESTRAINT (GRAY)	1	

FIG.849B

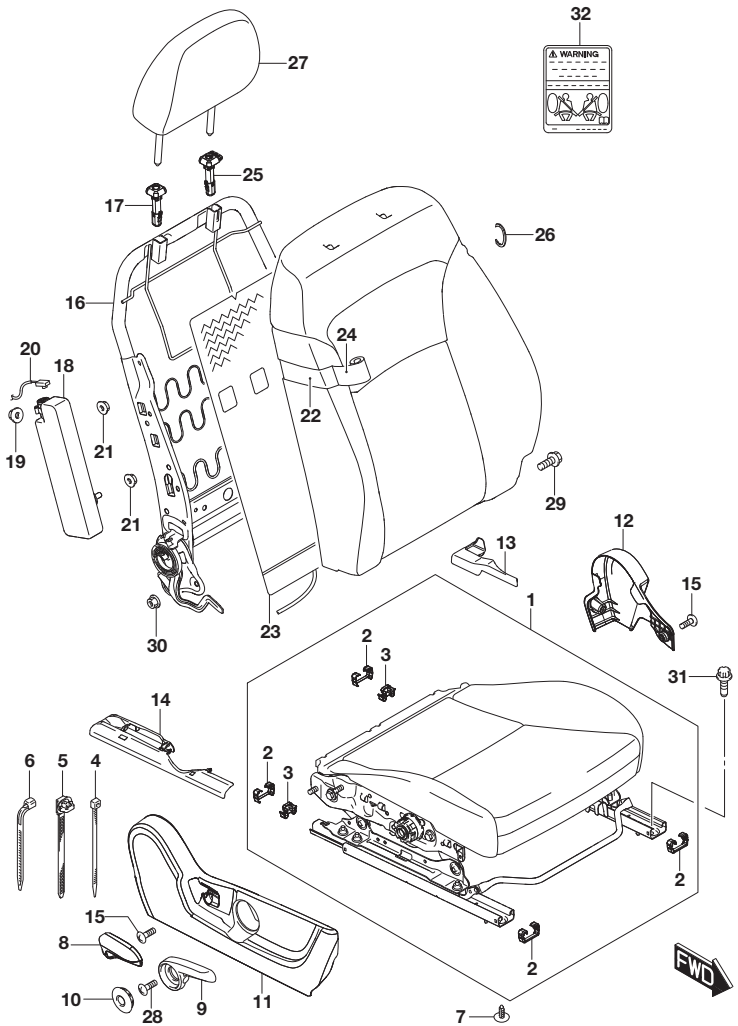

FIG.849B (4-F-13) FRONT RH SEAT (LHD:W/EASS)

REF NO.	PART NO.	DESCRIPTION	Q'TY	REMARKS
18	85350-54P00	MODULE ASSY, SIDE AIR BAG RH	1	SEE NOTE
19	85352-68L00	NUT, SIDE AIRBAG BRKT	1	
20	85355-74S00	HARNESS ASSY, SIDE AIRBAG	1	
21	85359-68L00	NUT, SIDE AIRBAG	2	
22	85360-54PA0	PAD, FR BACK RH	1	
23	85370-61M20	HEATER, FR BACK	1	W/SEAT HEATER
24-1	85380-54PB1-BAE	TRIM, FR BACK RH (BLACK/GRAY)	1	GL
24-2	85380-54PB1-BAN	TRIM, FR BACK RH (BLACK/WHITE)	1	GL
24-3	85380-54PL1-EAR	TRIM, FR BACK RH (BLACK/WHITE)	1	GLX
25	85840-63J12-P4Z	GUIDE, HEADRESTRAINT (GRAY)	1	
26	09387-19001	RING (OD:22.6)	6	
27-1	86401-61M00-AN4	HEADRESTRAINT ASSY (BLACK/WHITE)	1	GL
27-2	86401-61M00-PET	HEADRESTRAINT ASSY (BLACK)	1	GL
27-3	86401-61MA0-ANT	HEADRESTRAINT ASSY (BLACK/WHITE)	1	GLX
28	09132-05043	SCREW (5X10)	2	
29	01550-1016A	BOLT	2	
30	08316-1010A	NUT	2	
31	09119-08097	BOLT (8X25)	4	
32	85354-59JC1	LABEL, SIDE AIRBAG	1	ENGLISH

NOTE : SPECIAL PROCEDURES ARE REQUIRED FOR SERVICING OR REPLACING AN AIR BAG. FOR THAT REASON, ONLY A FACTORY-AUTHORIZED DEALER, WHO IS SPECIALLY TRAINED, SHOULD BE ALLOWED TO SERVICE OR REPLACE YOUR AIR BAGS.

FIG.849C

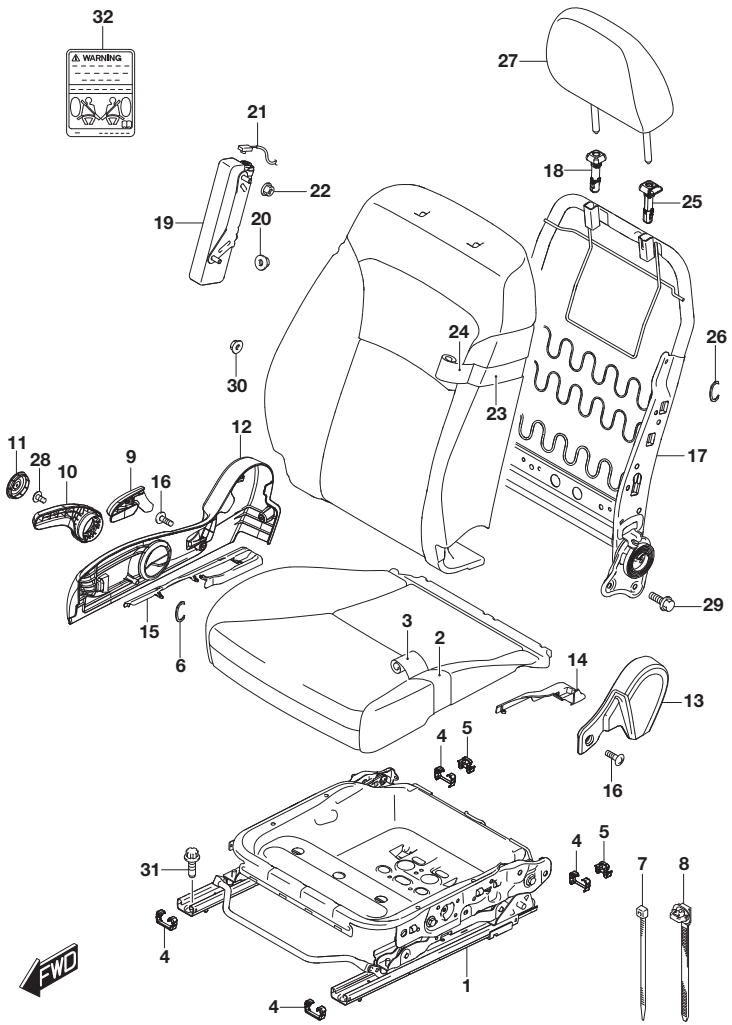

FIG.849C (4-F-14) FRONT RH SEAT (RHD:N/EASS)

REF NO.	PART NO.	DESCRIPTION	Q'TY	REMARKS
1	85103-61M00	FRAME ASSY, FR CUSH RH	1	
2	85160-61M01	PAD, FR CUSH	1	
3-1	85180-61M00-BAE	TRIM, FR CUSH RH (BLACK/GRAY)	1	GL
3-2	85180-61M00-BAN	TRIM, FR CUSH RH (BLACK/WHITE)	1	GL
3-3	85180-54PA1-EAR	TRIM, FR CUSH RH (BLACK/WHITE)	1	GLX
4	86652-68L00	PROTECTOR, LOWER RAIL END	4	
5	86654-68L00	PROTECTOR, UPPER RAIL END	2	
6	09387-19001	RING (OD:22.6)	11	
7	85137-51K00	CLAMP	2	GL
8	85137-68L00	CLAMP	1	
9	85211-65JA0-5PK	KNOB, RCLNG RH (BLACK)	1	
10	85213-65J00-5PK	LEVER, SEAT LIFTER (BLACK)	1	
11	85214-63J20-5PK	CAP, LIFTER LEVER (BLACK)	1	
12	85221-68L10-5PK	COVER, FR RCLNG OUTSIDE RH (BLACK)	1	
13	85241-68L00-5PK	COVER, FR RCLNG INSIDE RH (BLACK)	1	
14	85243-61M00-5PK	COVER, RR RISER INSIDE RH (BLACK)	1	
15	85244-61M00-5PK	COVER, RR RISER OUTSIDE RH (BLACK)	1	
16	85295-51K00	SCREW, RECLINING COVER	4	
17	85303-61MA0	FRAME ASSY, FR BACK RH	1	
18	85341-63J12-P4Z	GUIDE, HEADRESTRAINT (GRAY)	1	
19	85350-54P00	MODULE ASSY, SIDE AIR BAG RH	1	SEE NOTE
20	85352-68L00	NUT, SIDE AIRBAG BRKT	1	
21	85355-61M00	HARNESS ASSY, SIDE AIRBAG	1	
22	85359-68L00	NUT, SIDE AIRBAG	2	
23	85360-54PA0	PAD, FR BACK RH	1	

NOTE : SPECIAL PROCEDURES ARE REQUIRED FOR SERVICING OR REPLACING AN AIR BAG. FOR THAT REASON, ONLY A FACTORY-AUTHORIZED DEALER, WHO IS SPECIALLY TRAINED, SHOULD BE ALLOWED TO SERVICE OR REPLACE YOUR AIR BAGS.

FIG.849C

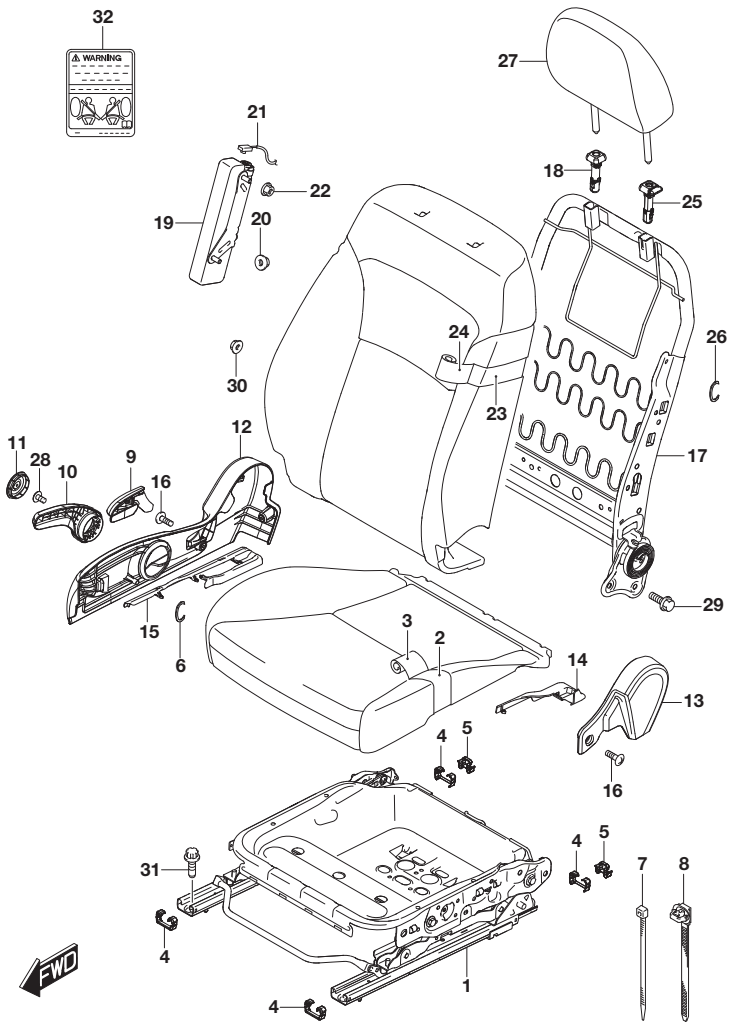

FIG.849C (4-F-15) FRONT RH SEAT (RHD:N/EASS)

REF NO.	PART NO.	DESCRIPTION	Q'TY	REMARKS
24-1	85380-54PA1-BAE	TRIM, FR BACK RH (BLACK/GRAY)	1	GL
24-2	85380-54PA1-BAN	TRIM, FR BACK RH (BLACK/WHITE)	1	GL
24-3	85380-54PK1-EAR	TRIM, FR BACK RH (BLACK/WHITE)	1	GLX
25	85840-63J12-P4Z	GUIDE, HEADRESTRAINT (GRAY)	1	
26	09387-19001	RING (OD:22.6)	6	
27-1	86401-61M00-AN4	HEADRESTRAINT ASSY (BLACK/WHITE)	1	GL
27-2	86401-61M00-PET	HEADRESTRAINT ASSY (BLACK)	1	GL
27-3	86401-61MA0-ANT	HEADRESTRAINT ASSY (BLACK/WHITE)	1	GLX
28	09132-05043	SCREW (5X10)	2	
29	01550-1016A	BOLT	2	
30	08316-1010A	NUT	2	
31	09119-08097	BOLT (8X25)	4	
32	85354-59JC1	LABEL, SIDE AIRBAG	1	

FIG.849D

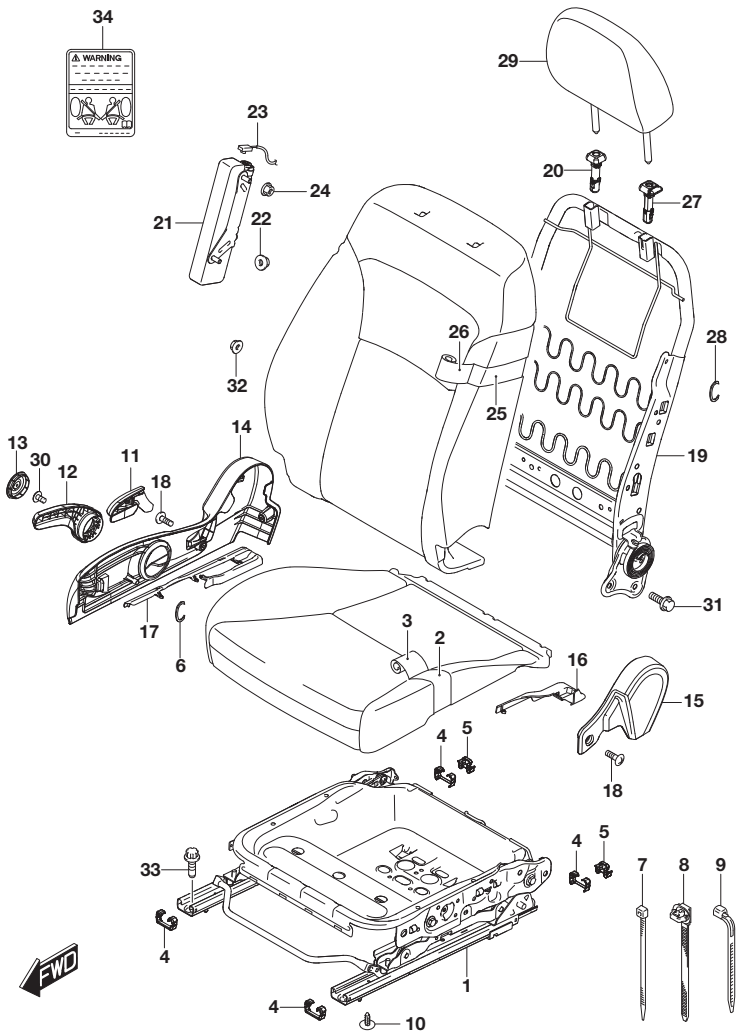

FIG.849D (4-G-2) FRONT RH SEAT (RHD:W/EASS)

REF NO.	PART NO.	DESCRIPTION	Q'TY	REMARKS
1	85103-74S00	FRAME ASSY, FR CUSH RH	1	
2	85160-61M01	PAD, FR CUSH	1	
3-1	85180-74S00-BAE	TRIM, FR CUSH RH (BLACK/GRAY)	1	GL
3-2	85180-74S00-BAN	TRIM, FR CUSH RH (BLACK/WHITE)	1	GL
3-3	85180-74SA1-EAR	TRIM, FR CUSH RH (BLACK/WHITE)	1	GLX
4	86652-68L00	PROTECTOR, LOWER RAIL END	4	
5	86654-68L00	PROTECTOR, UPPER RAIL END	2	
6	09387-19001	RING (OD:22.6)	11	
7	85137-51K00	CLAMP	2	
8	85137-68L00	CLAMP	1	
9	85138-51K00	CLAMP	5	
10	85139-74S00	CLIP	2	
11	85211-65JA0-5PK	KNOB, RCLNG RH (BLACK)	1	
12	85213-65J00-5PK	LEVER, SEAT LIFTER (BLACK)	1	
13	85214-63J20-5PK	CAP, LIFTER LEVER (BLACK)	1	
14	85221-68L10-5PK	COVER, FR RCLNG OUTSIDE RH (BLACK)	1	
15	85241-68L00-5PK	COVER, FR RCLNG INSIDE RH (BLACK)	1	
16	85243-61M00-5PK	COVER, RR RISER INSIDE RH (BLACK)	1	
17	85244-61M00-5PK	COVER, RR RISER OUTSIDE RH (BLACK)	1	
18	85295-51K00	SCREW, RECLINING COVER	4	
19	85303-61MA0	FRAME ASSY, FR BACK RH	1	
20	85341-63J12-P4Z	GUIDE, HEADRESTRAINT (GRAY)	1	
21	85350-54P00	MODULE ASSY, SIDE AIR BAG RH	1	SEE NOTE
22	85352-68L00	NUT, SIDE AIRBAG BRKT	1	
23	85355-74S00	HARNESS ASSY, SIDE AIRBAG	1	

NOTE : SPECIAL PROCEDURES ARE REQUIRED FOR SERVICING OR REPLACING AN AIR BAG. FOR THAT REASON, ONLY A FACTORY-AUTHORIZED DEALER, WHO IS SPECIALLY TRAINED, SHOULD BE ALLOWED TO SERVICE OR REPLACE YOUR AIR BAGS.

FIG.849D

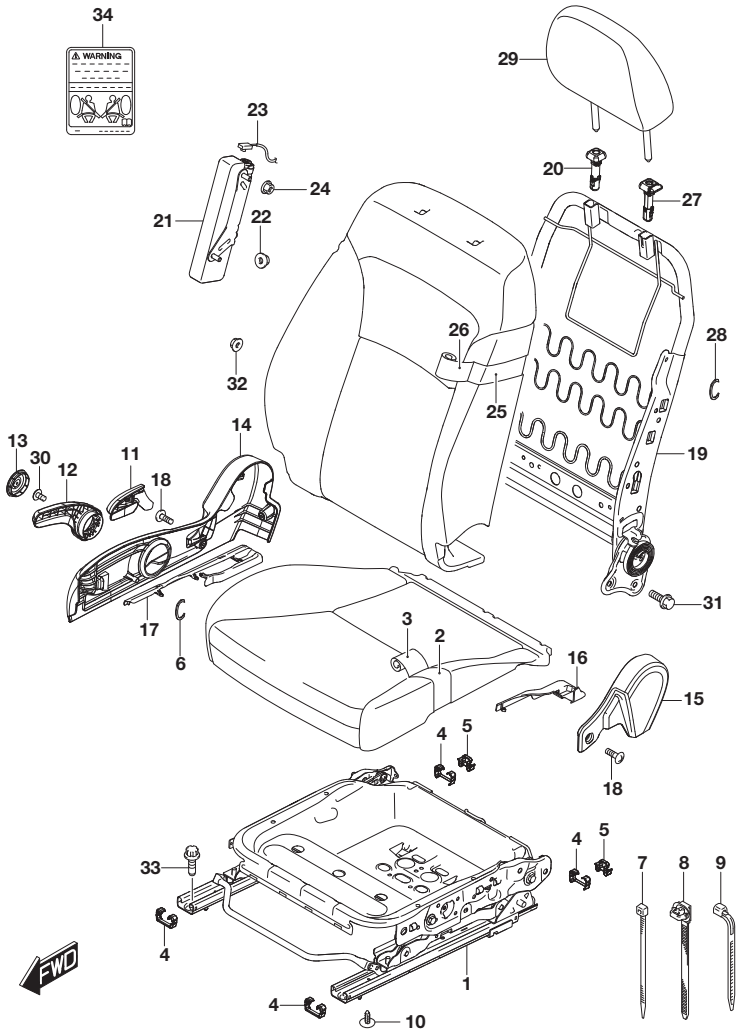

FIG.849D (4-G-3) FRONT RH SEAT (RHD:W/EASS)

REF NO.	PART NO.	DESCRIPTION	Q'TY	REMARKS
24	85359-68L00	NUT, SIDE AIRBAG	2	
25	85360-54PA0	PAD, FR BACK RH	1	
26-1	85380-54PA1-BAE	TRIM, FR BACK RH (BLACK/GRAY)	1	GL
26-2	85380-54PA1-BAN	TRIM, FR BACK RH (BLACK/WHITE)	1	GL
26-3	85380-54PK1-EAR	TRIM, FR BACK RH (BLACK/WHITE)	1	GLX
27	85840-63J12-P4Z	GUIDE, HEADRESTRAINT (GRAY)	1	
28	09387-19001	RING (OD:22.6)	6	
29-1	86401-61M00-AN4	HEADRESTRAINT ASSY (BLACK/WHITE)	1	GL
29-2	86401-61M00-PET	HEADRESTRAINT ASSY (BLACK)	1	GL
29-3	86401-61MA0-ANT	HEADRESTRAINT ASSY (BLACK/WHITE)	1	GLX
30	09132-05043	SCREW (5X10)	2	
31	01550-1016A	BOLT	2	
32	08316-1010A	NUT	2	
33	09119-08097	BOLT (8X25)	4	
34	85354-59JC1	LABEL, SIDE AIRBAG	1	

FIG.850A

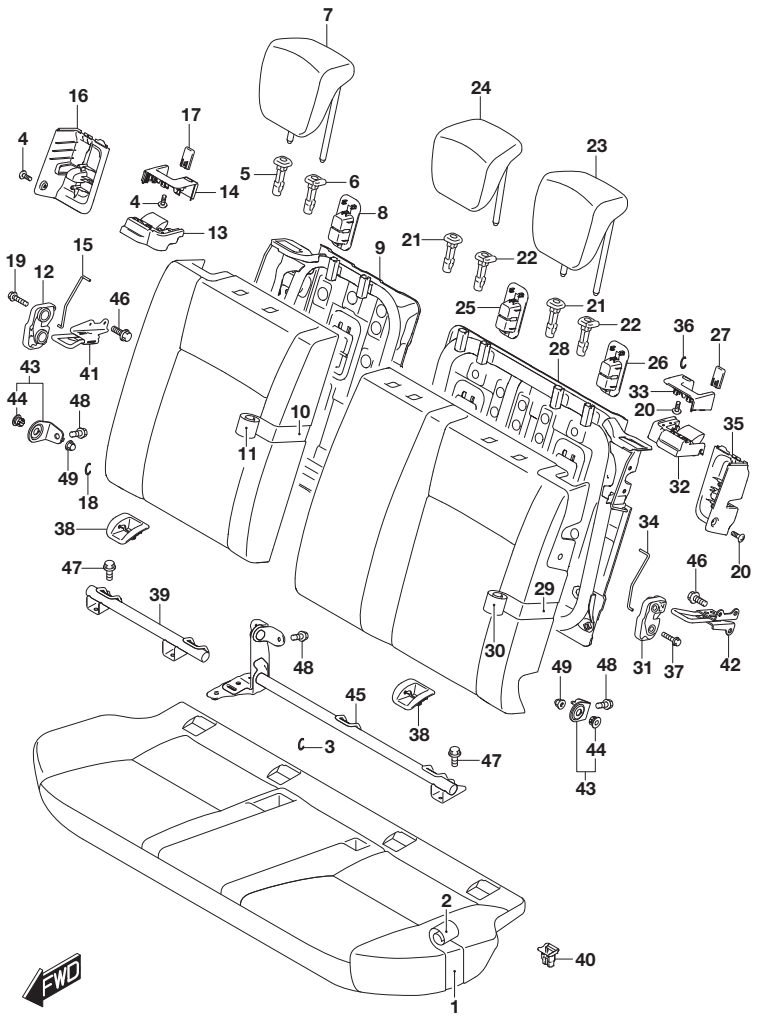

FIG.850A (4-G-4) REAR SEAT

REF NO.	PART NO.	DESCRIPTION	Q'TY	REMARKS
1	87160-54P02	PAD, RR CUSH	1	
2-1	87180-54P01-BAM	TRIM, RR CUSH (BLACK/GRAY)	1	GL
2-2	87180-54P01-BAP	TRIM, RR CUSH (BLACK/WHITE)	1	GL
2-3	87180-54PA1-C7Z	TRIM, RR CUSH (BLACK/WHITE)	1	GLX
3	09387-19001	RING (OD:22.6)	46	
4	85295-51K00	SCREW, RECLINING COVER	2	
5	85341-63J12-P4Z	GUIDE, HEADRESTRAINT (GRAY)	1	
6	85840-63J12-P4Z	GUIDE, HEADRESTRAINT (GRAY)	1	
7-1	86401-54P10-PET	HEADRESTRAINT ASSY, RR RH (BLACK)	1	GL
7-2	86401-54PB0-ANT	HEADRESTRAINT ASSY, RR RH (BLACK/WHITE)	1	GLX
8	87225-68L10-5PK	COVER, TETHER ANCHOR (BLACK)	1	
9	87310-61M00	FRAME, RR BACK RH	1	
10	87360-61M00	PAD, RR BACK RH	1	
11-1	87380-61M00-BAM	TRIM, RR BACK RH (BLACK/GRAY)	1	GL
11-2	87380-61M00-BAP	TRIM, RR BACK RH (BLACK/WHITE)	1	GL
11-3	87380-54PA1-C7Z	TRIM, RR BACK RH (BLACK/WHITE)	1	GLX
12	87480-62J20	LOCK ASSY, RR BACK RH	1	
13	87481-61M30-5PK	KNOB, RR BACK LOCK RH (BLACK)	1	
14	87482-61M30-5PK	BEZEL, RR BACK LOCK RH (BLACK)	1	
15	87485-61M00	WIRE, RR BACK LOCK RH	1	
16	87486-61M00-5PK	BEZEL, RR BACK LOCK HOLE RH (BLACK)	1	
17	87487-61M00-5PK	INDICATOR, RR BACK LOCK (BLACK)	1	
18	09387-19001	RING (OD:22.6)	2	
19	01550-0835A	BOLT	2	
20	85295-51K00	SCREW, RECLINING COVER	2	
21	85341-63J12-P4Z	GUIDE, HEADRESTRAINT (GRAY)	2	
22	85840-63J12-P4Z	GUIDE, HEADRESTRAINT (GRAY)	2	
23-1	86401-54P10-PET	HEADRESTRAINT ASSY, RR LH (BLACK)	1	GL
23-2	86401-54PB0-ANT	HEADRESTRAINT ASSY, RR LH (BLACK/WHITE)	1	GLX

FIG.850A

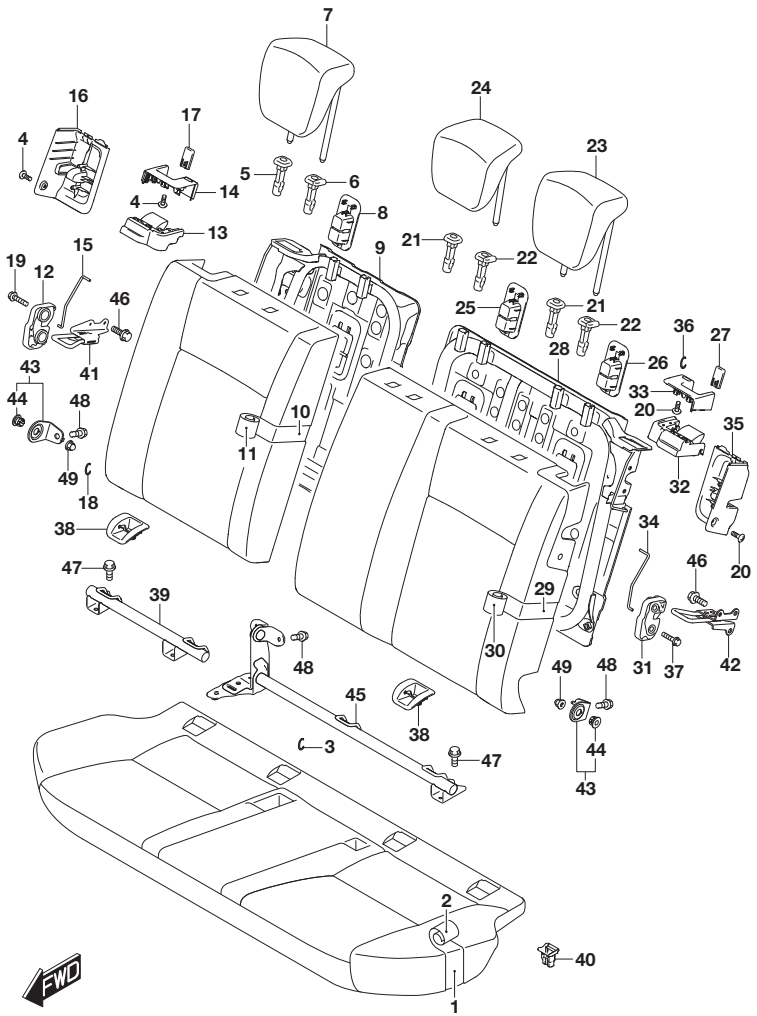

FIG.850A (4-G-5) REAR SEAT

REF NO.	PART NO.	DESCRIPTION	Q'TY	REMARKS
24-1	86401-61M20-PET	HEADRESTRAINT ASSY, RR CTR (BLACK)	1	GL
24-2	86401-61MC0-ANT	HEADRESTRAINT ASSY, RR CTR (BLACK/WHITE)	1	GLX
25	87225-61M00-5PK	COVER, TETHER ANCHOR (BLACK)	1	
26	87225-68L10-5PK	COVER, TETHER ANCHOR (BLACK)	1	
27	87487-61M00-5PK	INDICATOR, RR BACK LOCK (BLACK)	1	
28	87810-61M00	FRAME, RR BACK LH	1	
29	87860-61M00	PAD, RR BACK LH	1	
30-1	87880-61M00-BAM	TRIM, RR BACK LH (BLACK/GRAY)	1	GL
30-2	87880-61M00-BAP	TRIM, RR BACK LH (BLACK/WHITE)	1	GL
30-3	87880-54PA1-C7Z	TRIM, RR BACK LH (BLACK/WHITE)	1	GLX
31	87980-62J20	LOCK ASSY, RR BACK LH	1	
32	87981-61M30-5PK	KNOB, RR BACK LOCK LH (BLACK)	1	
33	87982-61M30-5PK	BEZEL, RR BACK LOCK LH (BLACK)	1	
34	87985-61M00	WIRE, RR BACK LOCK LH	1	
35	87986-61M00-5PK	BEZEL, RR BACK LOCK HOLE LH (BLACK)	1	
36	09387-19001	RING (OD:22.6)	2	
37	01550-0835A	BOLT	2	
38	87228-54P00	BEZEL, LOWER ANCHOR	4	
39	87260-54P00	BRACKET, CHILD ANCHORAGE	1	
40	87460-76G01	HOOK, RR SEAT CUSH	2	
41	87470-54P00	STRIKER, RR BACK RH	1	
42	87870-54P00	STRIKER, RR BACK LH	1	
43	87910-54P00	HINGE, RR SIDE	2	
44	87912-54P00	.BUSH, RR BACK HINGE	2	
45	87950-54P00	HINGE, RR SEAT CENTER	1	
46	01551-0820A	BOLT	6	
47	01551-1025A	BOLT	4	
48	01551-1025A	BOLT	4	
49	08313-2010A	NUT	2	

FIG.860A

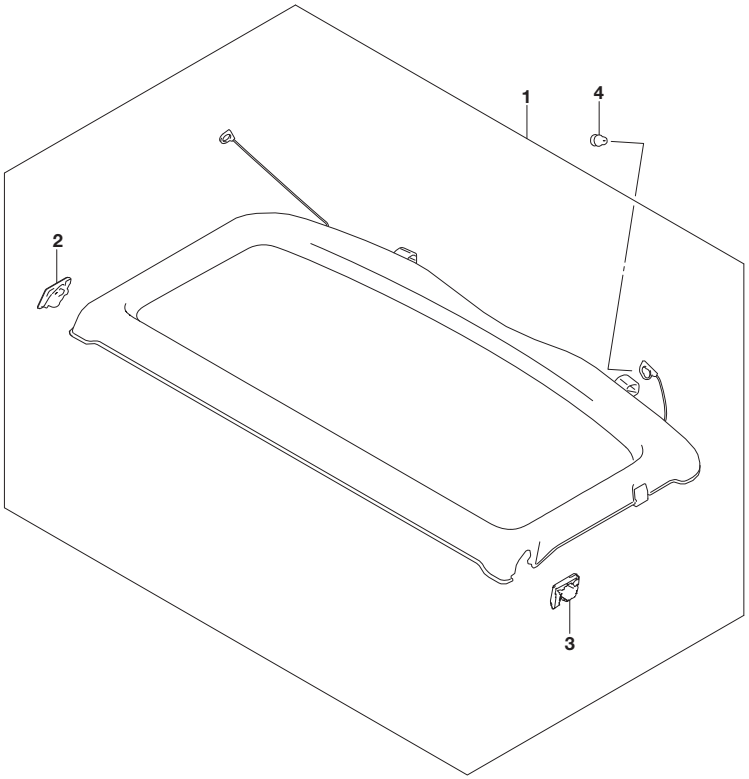

FIG.860A (4-G-6) PARCEL SHELF

REF NO.	PART NO.	DESCRIPTION	Q'TY	REMARKS
1	88910-86R10-R3F	SHELF, REAR PARCEL (BLACK)	1	
2	88913-54P00	.HOLDER, REAR PARCEL RH	1	
3	88917-54P00	.HOLDER, REAR PARCEL LH	1	
4	88919-79J00	HOOK, RR PARCEL STRING	2	

APK414-3 P22 860A
PARCEL SHELF

FIG.865A

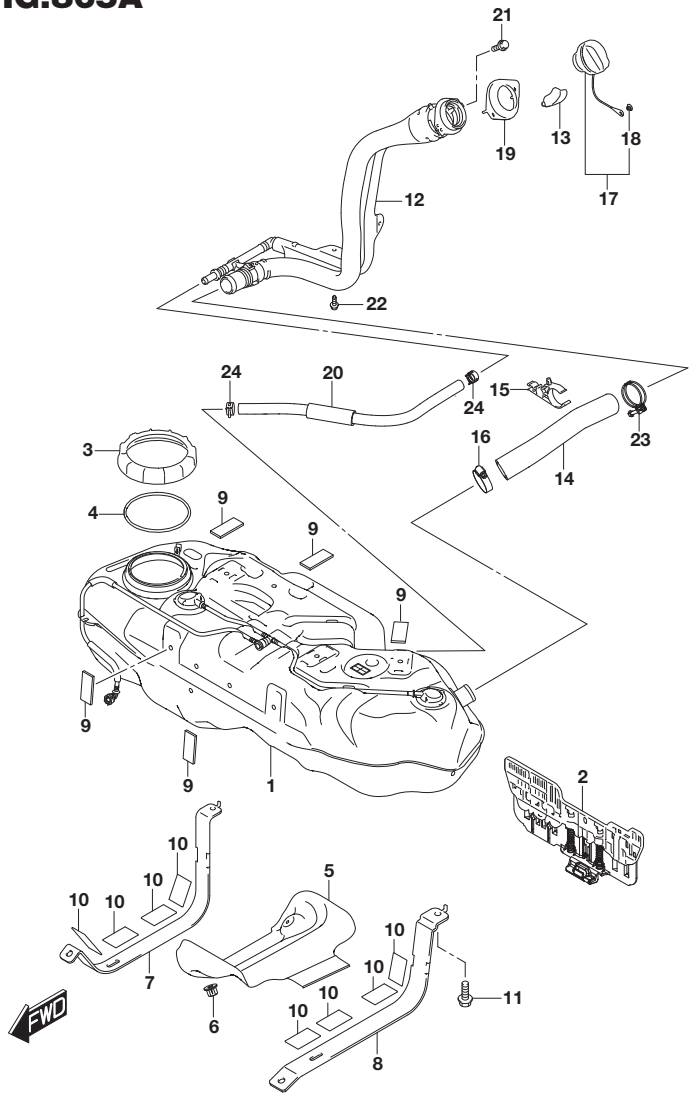

FIG.865A (4-G-7) FUEL TANK (TYPE 3:N/EASS)

REF NO.	PART NO.	DESCRIPTION	Q'TY	REMARKS
1	89101-61MA0	TANK, FUEL	1	
2	89185-68L00	PLATE, FUEL TANK BAFFLE	1	
3	89191-68L00	NUT, FUEL PUMP LOCK	1	
4	89192-62J00	O RING, FUEL PUMP	1	
5	89311-61M00	INSULATOR, HEAT	1	
6	89315-62J00	NUT, HEAT INSULATOR	2	
7	89360-79J00	BELT, FUEL TANK FIXER RH	1	
8	89370-79J00	BELT, FUEL TANK FIXER LH	1	
9	89385-61M01	PAD, FUEL TANK	5	
10	89386-61M00	PAD, FUEL TANK BELT	9	
11	09118-10073	BOLT (10X30)	4	
12	89210-61MA0	NECK, FUEL FILLER	1	
13	89232-57L00	COVER, FUEL FILLER NECK	1	
14	89241-61M10	HOSE, FUEL TANK FILLER	1	
15	89242-80J00	CLAMP, FILLER & BREATHER HOSE	1	
16	89243-68L00	CLAMP, FUEL FILLER HOSE	1	
17	89260-77K01	CAP ASSY, FUEL FILLER	1	
18	89267-77K00	.CLIP, CAP TETHER	1	
19	89285-54P00	PACKING, FUEL FILLER	1	
20	89291-54P00	HOSE, FUEL TANK BREATHER	1	
21	09116-05023	BOLT (5X20)	2	
22	09116-06205	BOLT (6X16)	1	
23	09400-45411	CLAMP	1	
24	09401-16407	CLIP (ID:16.5)	2	

FIG.865B

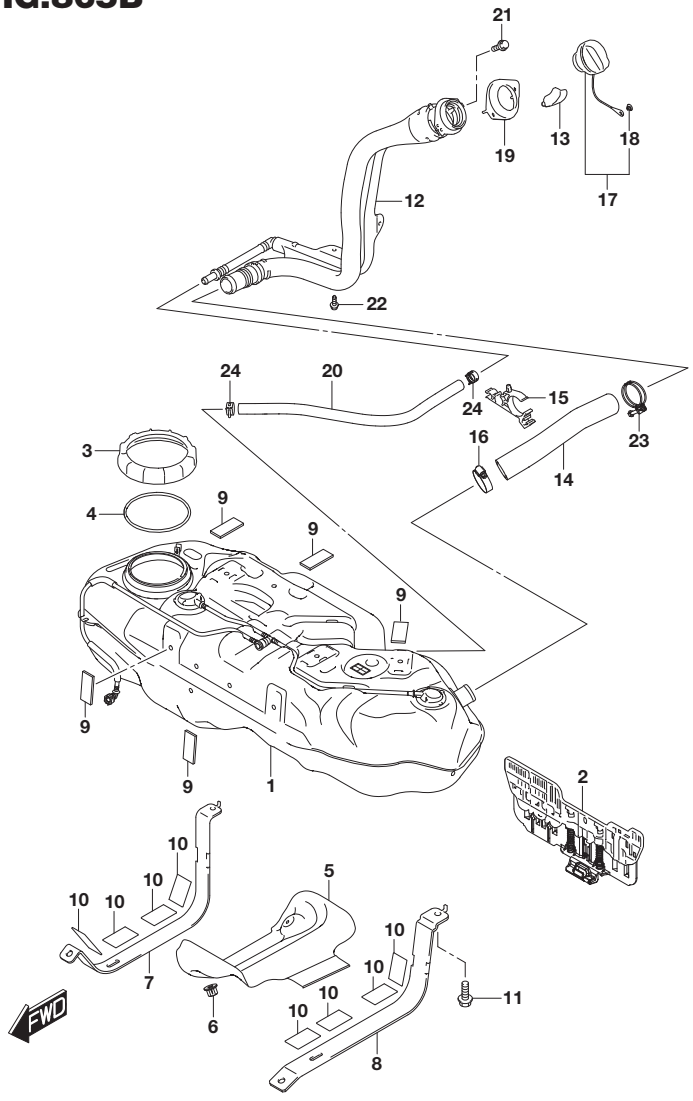

FIG.865B (4-G-8) FUEL TANK (TYPE 3:W/EASS,TYPE 4)

REF NO.	PART NO.	DESCRIPTION	Q'TY	REMARKS
1	89101-61ME0	TANK, FUEL	1	
2	89185-68L00	PLATE, FUEL TANK BAFFLE	1	
3	89191-68L00	NUT, FUEL PUMP LOCK	1	
4	89192-62J00	O RING, FUEL PUMP	1	
5	89311-61M00	INSULATOR, HEAT	1	
6	89315-62J00	NUT, HEAT INSULATOR	2	
7	89360-79J00	BELT, FUEL TANK FIXER RH	1	
8	89370-79J00	BELT, FUEL TANK FIXER LH	1	
9	89385-61M01	PAD, FUEL TANK	5	
10	89386-61M00	PAD, FUEL TANK BELT	9	
11	09118-10073	BOLT (10X30)	4	
12	89210-61ME0	NECK, FUEL FILLER	1	
13	89232-57L00	COVER, FUEL FILLER NECK	1	
14	89241-61M00	HOSE, FUEL TANK FILLER	1	
15	89242-56S00	CLAMP, FILLER & BREATHER HOSE	1	
16	89243-68L00	CLAMP, FUEL FILLER HOSE	1	
17	89260-77K01	CAP ASSY, FUEL FILLER	1	
18	89267-77K00	.CLIP, CAP TETHER	1	
19	89285-54P00	PACKING, FUEL FILLER	1	
20	89291-68P10	HOSE, FUEL TANK BREATHER	1	
21	09116-05023	BOLT (5X20)	2	
22	09116-06205	BOLT (6X16)	1	
23	09400-45411	CLAMP	1	
24	09401-16403	CLIP	2	

FIG.893A

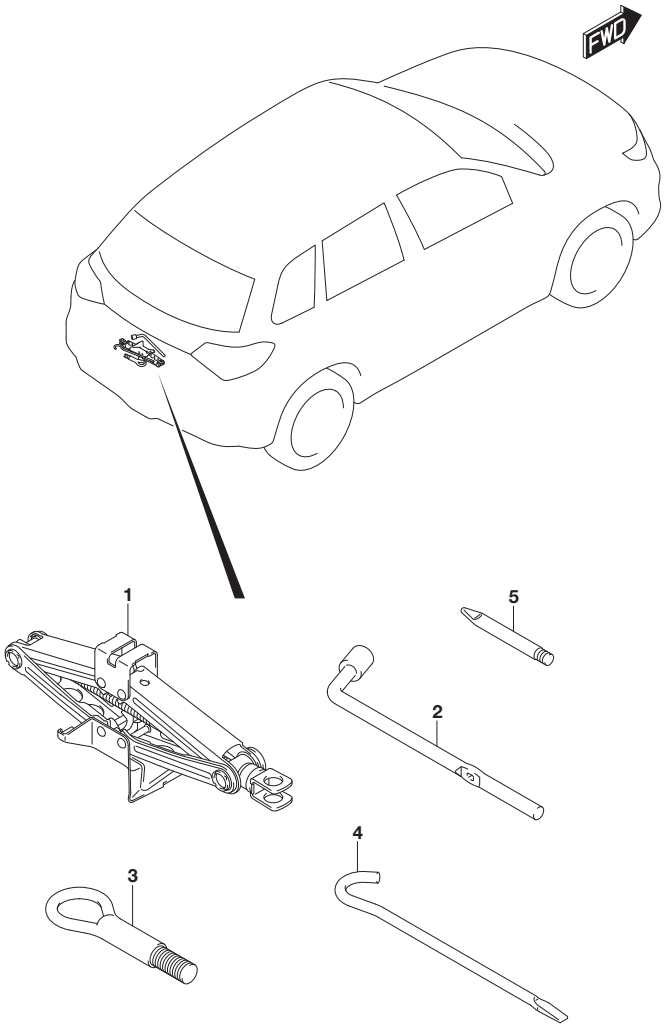

FIG.893A (4-G-9) TOOL

REF NO.	PART NO.	DESCRIPTION	Q'TY	REMARKS
1	89913-55LV1	JACK ASSY	1	W/SPARE TIRE
2	89921-83E00	WRENCH, WHEEL (17)	1	
3	89969-86R00	BOLT, TOWING HOOK	1	
4	09827-00004	LEVER	1	
5	09119-12022	TOOL	1	OPT

FIG.952A

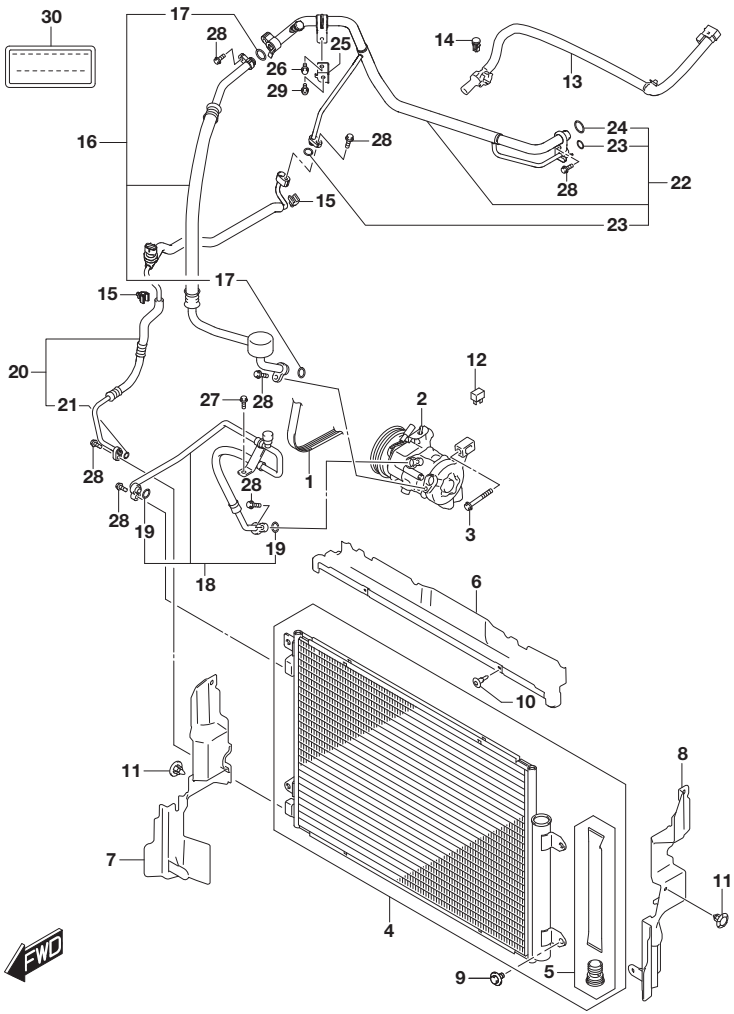

FIG.952A (4-G-10) AIR CONDITIONER (SEE NOTE)

REF NO.	PART NO.	DESCRIPTION	Q'TY	REMARKS
1	95141-54PB0	V-BELT (4PK)	1	
2	95200-54PA0	COMPRESSOR ASSY	1	
3	01550-0850A	BOLT	4	
4	95310-62M10	CONDENSER ASSY	1	
5	95339-61M10	.DRYER ASSY	1	
6	95340-55P01	SHROUD, RADIATOR UPR	1	
7	95343-55P01	SHROUD, INTER COOLER RH	1	
8	95344-55P00	SHROUD, INTER COOLER LH	1	
9	09116-06181	BOLT (6X13)	4	
10	09409-06314-5PK	CLIP (5.9X20.5) (BLACK)	2	
11	09409-07340	CLIP (6.8X11.5)	6	
12	38860-76F01	RELAY ASSY	1	A/C
13	95640-54P10	SENSOR ASSY, ROOM TEMP	1	W/AUTO AIR CON
14	95642-64G20	SENSOR, SUN LIGHT (DENSO)	1	W/AUTO AIR CON
15	23915-63J40	CLAMP, CLUTCH OIL PIPE NO.3	2	
16	95710-54PA0	HOSE, SUCTION	1	
17	95896-50G00	.O RING (D:2.4,ID:13.4)	2	
18	95720-54PA0	HOSE, DISCHARGE	1	
19	95895-50G00	.O RING (D:2.4,ID:10.8)	2	
20	95731-54PB0	HOSE, LIQUID	1	
21	95891-50G00	.O RING (D:1.8,ID:6.7)	1	
22	95746-61M30	PIPE, INNER HEAT EXCHANGER	1	
23	95891-50G00	.O RING (D:1.8,ID:6.7)	2	
24	95896-50G00	.O RING (D:2.4,ID:13.4)	1	
25	95781-61M00	STAY, SUCT PIPE	1	

NOTE : K10C:LHD:(W/MANUAL AIR CON,W/AUTO AIR CON)

FIG.952B(4-G-12) AIR CONDITIONER
(K10C:RHD:(W/MANUAL AIR CON,W/AUTO AIR CON))
FIG.952C(4-G-13) AIR CONDITIONER (K14C:LHD)
FIG.952D(4-G-14) AIR CONDITIONER (K14C:RHD)
FIG.952E(4-H-2) AIR CONDITIONER (K14D:LHD)
FIG.952F(4-H-3) AIR CONDITIONER (K14D:RHD)

FIG.952A

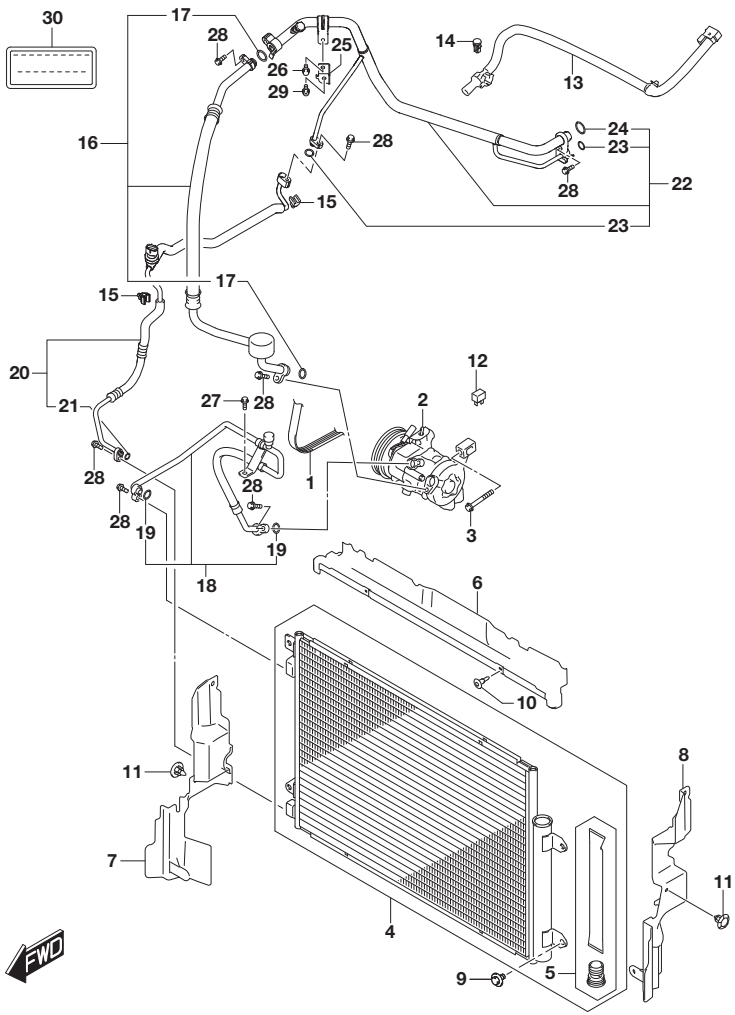

FIG.952A (4-G-11) AIR CONDITIONER (SEE NOTE)

REF NO.	PART NO.	DESCRIPTION	Q'TY	REMARKS
26	01550-0610A	BOLT	1	
27	01550-0610A	BOLT	1	
28	01550-0620C	BOLT	7	
29	02162-0612A	SCREW	1	
30	95955-61M00	LABEL, REFRIGERANT	1	

NOTE : K10C:LHD:(W/MANUAL AIR CON,W/AUTO AIR CON)

FIG.952B

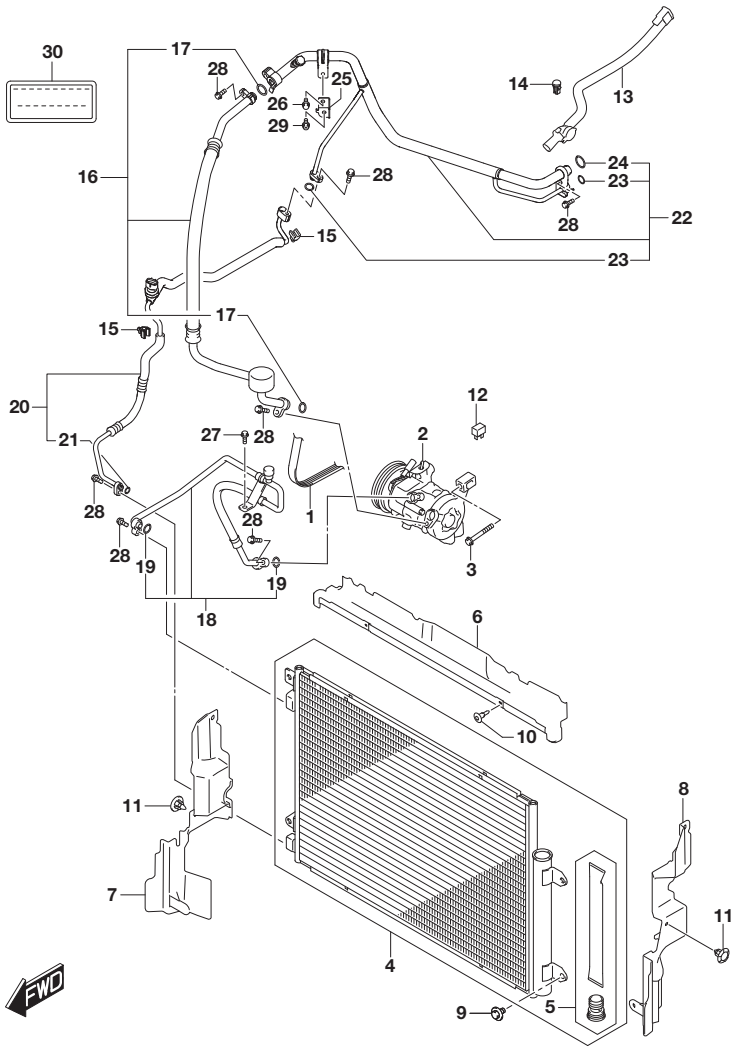

FIG.952B (4-G-12) AIR CONDITIONER (SEE NOTE)

REF NO.	PART NO.	DESCRIPTION	Q'TY	REMARKS
1	95141-54PB0	V-BELT (4PK)	1	
2	95200-54PA0	COMPRESSOR ASSY	1	
3	01550-0850A	BOLT	4	
4	95310-62M10	CONDENSER ASSY	1	
5	95339-61M10	.DRYER ASSY	1	
6	95340-55P01	SHROUD, RADIATOR UPR	1	
7	95343-55P01	SHROUD, INTER COOLER RH	1	
8	95344-55P00	SHROUD, INTER COOLER LH	1	
9	09116-06181	BOLT (6X13)	4	
10	09409-06314-5PK	CLIP (5.9X20.5) (BLACK)	2	
11	09409-07340	CLIP (6.8X11.5)	6	
12	38860-76F01	RELAY ASSY	1	A/C
13	95640-54P00	SENSOR ASSY, ROOM TEMP	1	W/AUTO AIR CON
14	95642-64G20	SENSOR, SUN LIGHT (DENSO)	1	W/AUTO AIR CON
15	23915-63J40	CLAMP, CLUTCH OIL PIPE NO.3	2	
16	95710-54PA0	HOSE, SUCTION	1	
17	95896-50G00	.O RING (D:2.4,ID:13.4)	2	
18	95720-54PA0	HOSE, DISCHARGE	1	
19	95895-50G00	.O RING (D:2.4,ID:10.8)	2	
20	95731-54PB0	HOSE, LIQUID	1	
21	95891-50G00	.O RING (D:1.8,ID:6.7)	1	
22	95746-61M10	PIPE, INNER HEAT EXCHANGER	1	
23	95891-50G00	.O RING (D:1.8,ID:6.7)	2	
24	95896-50G00	.O RING (D:2.4,ID:13.4)	1	
25	95781-61M00	STAY, SUCT PIPE	1	
26	01550-0610A	BOLT	1	
27	01550-0610A	BOLT	1	
28	01550-0620C	BOLT	7	
29	02162-0612A	SCREW	1	
30	95955-61M00	LABEL, REFRIGERANT	1	

NOTE : K10C:RHD:(W/MANUAL AIR CON,W/AUTO AIR CON)

FIG.952C

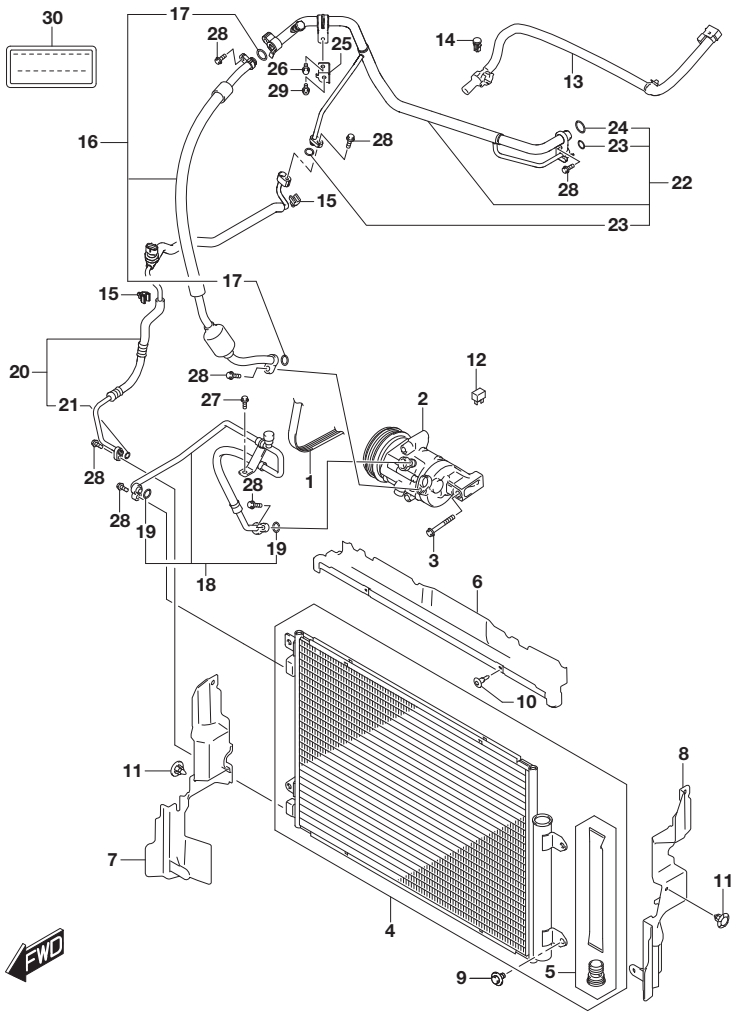

FIG.952C (4-G-13) AIR CONDITIONER (K14C:LHD)

REF NO.	PART NO.	DESCRIPTION	Q'TY	REMARKS
1	95141-54PB0	V-BELT (4PK)	1	
2	95200-54PB0	COMPRESSOR ASSY	1	
3	01550-0880A	BOLT	3	
4	95310-62M10	CONDENSER ASSY	1	
5	95339-61M10	.DRYER ASSY	1	
6	95340-55P01	SHROUD, RADIATOR UPR	1	
7	95343-55P01	SHROUD, INTER COOLER RH	1	
8	95344-55P00	SHROUD, INTER COOLER LH	1	
9	09116-06181	BOLT (6X13)	4	
10	09409-06314-5PK	CLIP (5.9X20.5) (BLACK)	2	
11	09409-07340	CLIP (6.8X11.5)	6	
12	38860-76F01	RELAY ASSY	1	A/C
13	95640-54P10	SENSOR ASSY, ROOM TEMP	1	
14	95642-64G20	SENSOR, SUN LIGHT (DENSO)	1	
15	23915-63J40	CLAMP, CLUTCH OIL PIPE NO.3	2	
16	95710-54PB1	HOSE, SUCTION	1	
17	95896-50G00	.O RING (D:2.4,ID:13.4)	2	
18	95720-54PB0	HOSE, DISCHARGE	1	
19	95895-50G00	.O RING (D:2.4,ID:10.8)	2	
20	95731-54PB0	HOSE, LIQUID	1	
21	95891-50G00	.O RING (D:1.8,ID:6.7)	1	
22	95746-61M30	PIPE, INNER HEAT EXCHANGER	1	
23	95891-50G00	.O RING (D:1.8,ID:6.7)	2	
24	95896-50G00	.O RING (D:2.4,ID:13.4)	1	
25	95781-61M00	STAY, SUCT PIPE	1	
26	01550-0610A	BOLT	1	
27	01550-0610A	BOLT	1	
28	01550-0620C	BOLT	7	
29	02162-0612A	SCREW	1	
30	95955-61M00	LABEL, REFRIGERANT	1	

FIG.952D

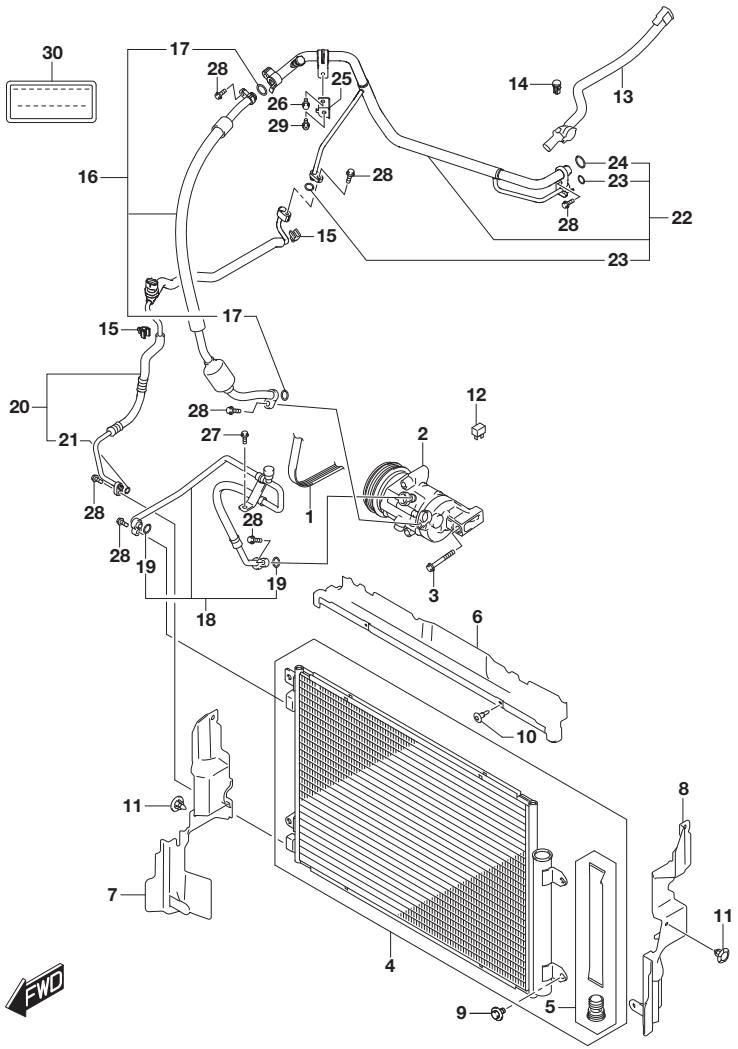

FIG.952D (4-G-14) AIR CONDITIONER (K14C:RHD)

REF NO.	PART NO.	DESCRIPTION	Q'TY	REMARKS
1	95141-54PB0	V-BELT (4PK)	1	
2	95200-54PB0	COMPRESSOR ASSY	1	
3	01550-0880A	BOLT	3	
4	95310-62M10	CONDENSER ASSY	1	
5	95339-61M10	.DRYER ASSY	1	
6	95340-55P01	SHROUD, RADIATOR UPR	1	
7	95343-55P01	SHROUD, INTER COOLER RH	1	
8	95344-55P00	SHROUD, INTER COOLER LH	1	
9	09116-06181	BOLT (6X13)	4	
10	09409-06314-5PK	CLIP (5.9X20.5) (BLACK)	2	
11	09409-07340	CLIP (6.8X11.5)	6	
12	38860-76F01	RELAY ASSY	1	A/C
13	95640-54P00	SENSOR ASSY, ROOM TEMP	1	
14	95642-64G20	SENSOR, SUN LIGHT (DENSO)	1	
15	23915-63J40	CLAMP, CLUTCH OIL PIPE NO.3	2	
16	95710-54PB1	HOSE, SUCTION	1	
17	95896-50G00	.O RING (D:2.4,ID:13.4)	2	
18	95720-54PB0	HOSE, DISCHARGE	1	
19	95895-50G00	.O RING (D:2.4,ID:10.8)	2	
20	95731-54PB0	HOSE, LIQUID	1	
21	95891-50G00	.O RING (D:1.8,ID:6.7)	1	
22	95746-61M10	PIPE, INNER HEAT EXCHANGER	1	
23	95891-50G00	.O RING (D:1.8,ID:6.7)	2	
24	95896-50G00	.O RING (D:2.4,ID:13.4)	1	
25	95781-61M00	STAY, SUCT PIPE	1	
26	01550-0610A	BOLT	1	
27	01550-0610A	BOLT	1	
28	01550-0620C	BOLT	7	
29	02162-0612A	SCREW	1	
30	95955-61M00	LABEL, REFRIGERANT	1	

FIG.952E

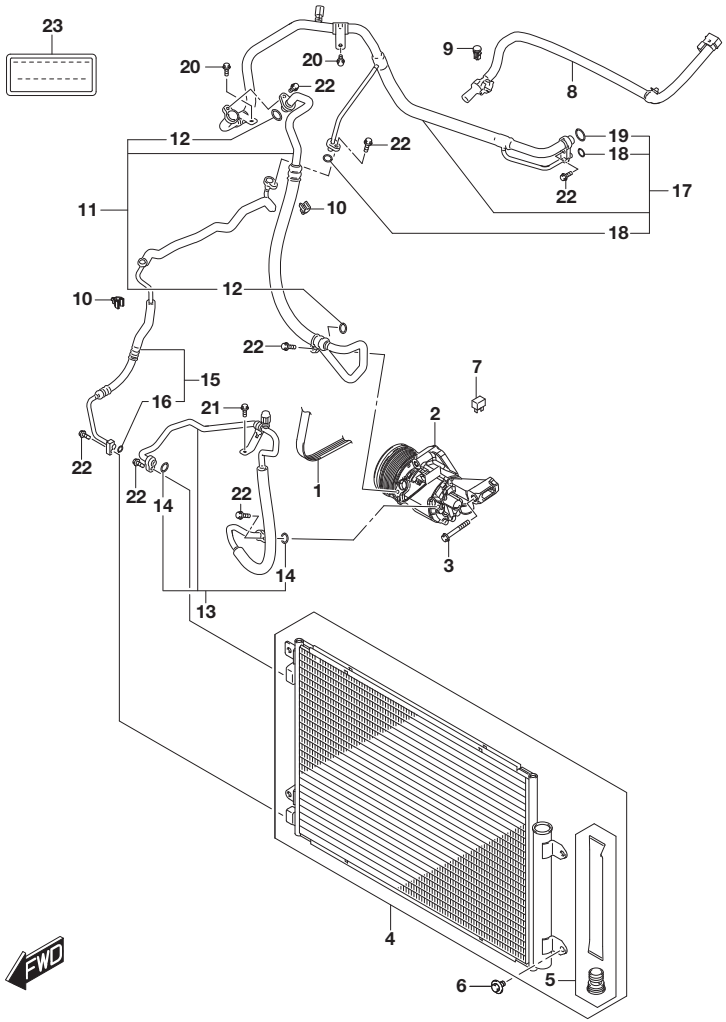

FIG.952E (4-H-2) AIR CONDITIONER (K14D:LHD)

REF NO.	PART NO.	DESCRIPTION	Q'TY	REMARKS
1	17522-53S00	BELT, GENERATOR	1	
2	95200-74S00	COMPRESSOR ASSY	1	
3	01550-1080A	BOLT	3	
4	95310-62M10	CONDENSER ASSY	1	
5	95339-61M10	.DRYER ASSY	1	
6	09116-06181	BOLT (6X13)	4	
7	38860-76F01	RELAY ASSY	1	A/C
8	95640-54P10	SENSOR ASSY, ROOM TEMP	1	
9	95642-64G20	SENSOR, SUN LIGHT (DENSO)	1	
10	23915-63J40	CLAMP, CLUTCH OIL PIPE NO.3	2	
11	95710-74S00	HOSE, SUCTION	1	
12	95896-50G00	.O RING (D:2.4,ID:13.4)	2	
13	95720-74S00	HOSE, DISCHARGE	1	
14	95895-50G00	.O RING (D:2.4,ID:10.8)	2	
15	95731-74S00	HOSE, LIQUID	1	
16	95891-50G00	.O RING (D:1.8,ID:6.7)	1	
17	95746-74S00	PIPE, INNER HEAT EXCHANGER	1	
18	95891-50G00	.O RING (D:1.8,ID:6.7)	2	
19	95896-50G00	.O RING (D:2.4,ID:13.4)	1	
20	01550-0612A	BOLT	2	
21	01550-0612A	BOLT	1	
22	01550-0620C	BOLT	7	
23	95955-61M00	LABEL, REFRIGERANT	1	

FIG.952F

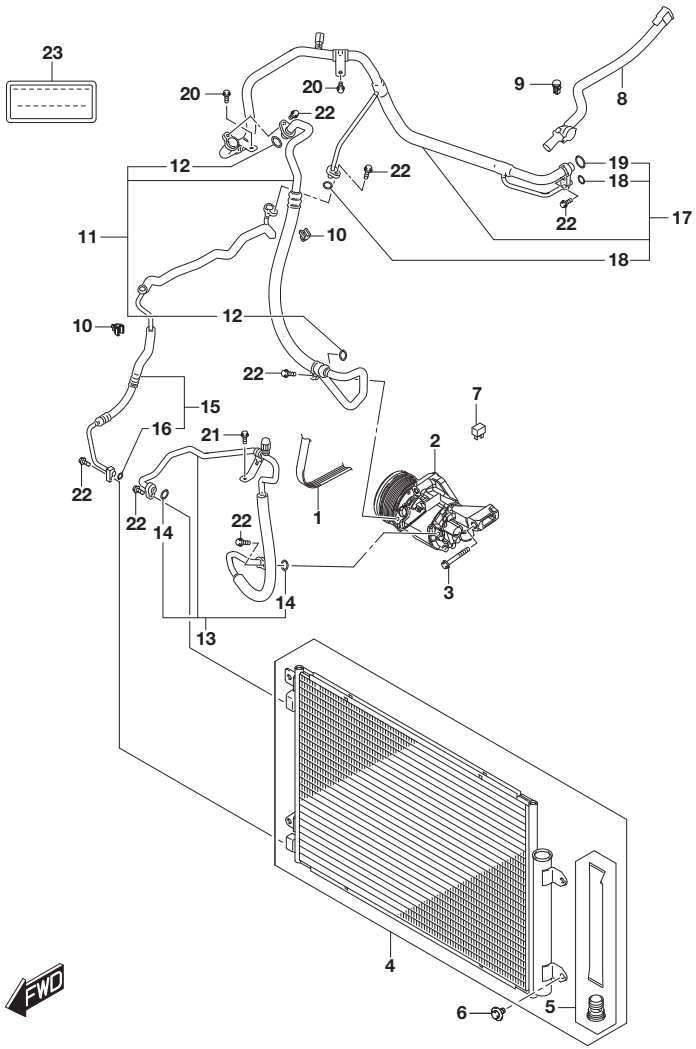

FIG.952F (4-H-3) AIR CONDITIONER (K14D:RHD)

REF NO.	PART NO.	DESCRIPTION	Q'TY	REMARKS
1	17522-53S00	BELT, GENERATOR	1	
2	95200-74S00	COMPRESSOR ASSY	1	
3	01550-1080A	BOLT	3	
4	95310-62M10	CONDENSER ASSY	1	
5	95339-61M10	.DRYER ASSY	1	
6	09116-06181	BOLT (6X13)	4	
7	38860-76F01	RELAY ASSY	1	A/C
8	95640-54P00	SENSOR ASSY, ROOM TEMP	1	
9	95642-64G20	SENSOR, SUN LIGHT (DENSO)	1	
10	23915-63J40	CLAMP, CLUTCH OIL PIPE NO.3	2	
11	95710-74S00	HOSE, SUCTION	1	
12	95896-50G00	.O RING (D:2.4,ID:13.4)	2	
13	95720-74S00	HOSE, DISCHARGE	1	
14	95895-50G00	.O RING (D:2.4,ID:10.8)	2	
15	95731-74S00	HOSE, LIQUID	1	
16	95891-50G00	.O RING (D:1.8,ID:6.7)	1	
17	95746-74S00	PIPE, INNER HEAT EXCHANGER	1	
18	95891-50G00	.O RING (D:1.8,ID:6.7)	2	
19	95896-50G00	.O RING (D:2.4,ID:13.4)	1	
20	01550-0612A	BOLT	2	
21	01550-0612A	BOLT	1	
22	01550-0620C	BOLT	7	
23	95955-61M00	LABEL, REFRIGERANT	1	

FIG.990A

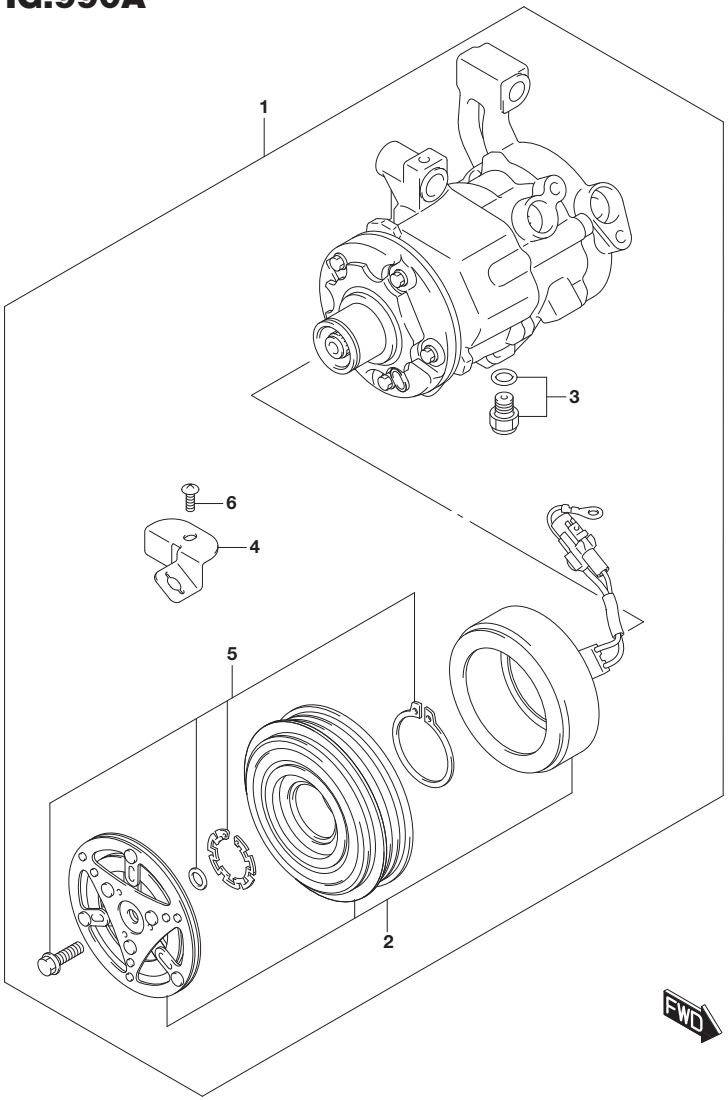

FIG.990A (4-H-4) COMPRESSOR (SEE NOTE)

REF NO.	PART NO.	DESCRIPTION	Q'TY	REMARKS
1	95200-54PA0	COMPRESSOR ASSY	1	
2	95210-54PA0	.CLUTCH, MAGNET	1	
3	95271-68KA1	.VALVE, RELIEF	1	
4	95291-54PA0	.BRACKET	1	
5	95298-60MA0	.CLIP KIT	1	
6	02112-3508A	.SCREW	1	

NOTE : K10C:(W/MANUAL AIR CON,W/AUTO AIR CON)

APK414-3 P22 990A
COMPRESSOR (1)

FIG.990B

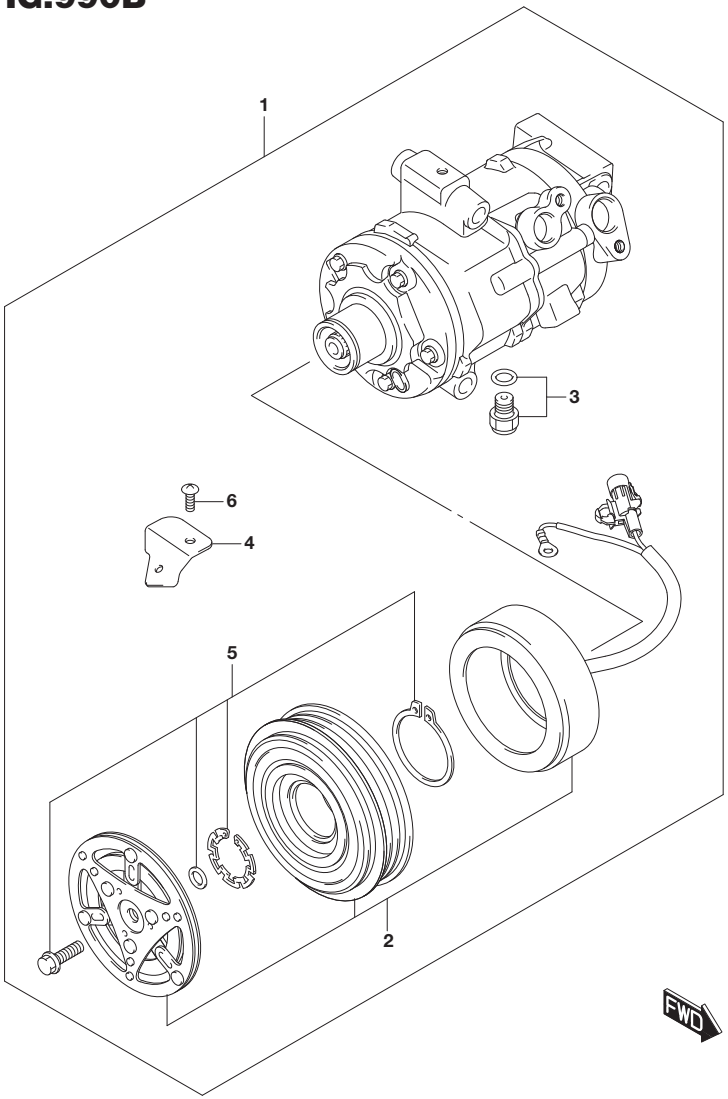

FIG.990B (4-H-5) COMPRESSOR (K14C)

REF NO.	PART NO.	DESCRIPTION	Q'TY	REMARKS
1	95200-54PB0	COMPRESSOR ASSY	1	
2	95210-54PB0	.CLUTCH, MAGNET	1	
3	95271-68KA1	.VALVE, RELIEF	1	
4	95291-54PB0	.BRACKET	1	
5	95298-60MA0	.CLIP KIT	1	
6	02112-3508A	.SCREW	1	

APK414-3 P22 990B
COMPRESSOR (2)

FIG.990C

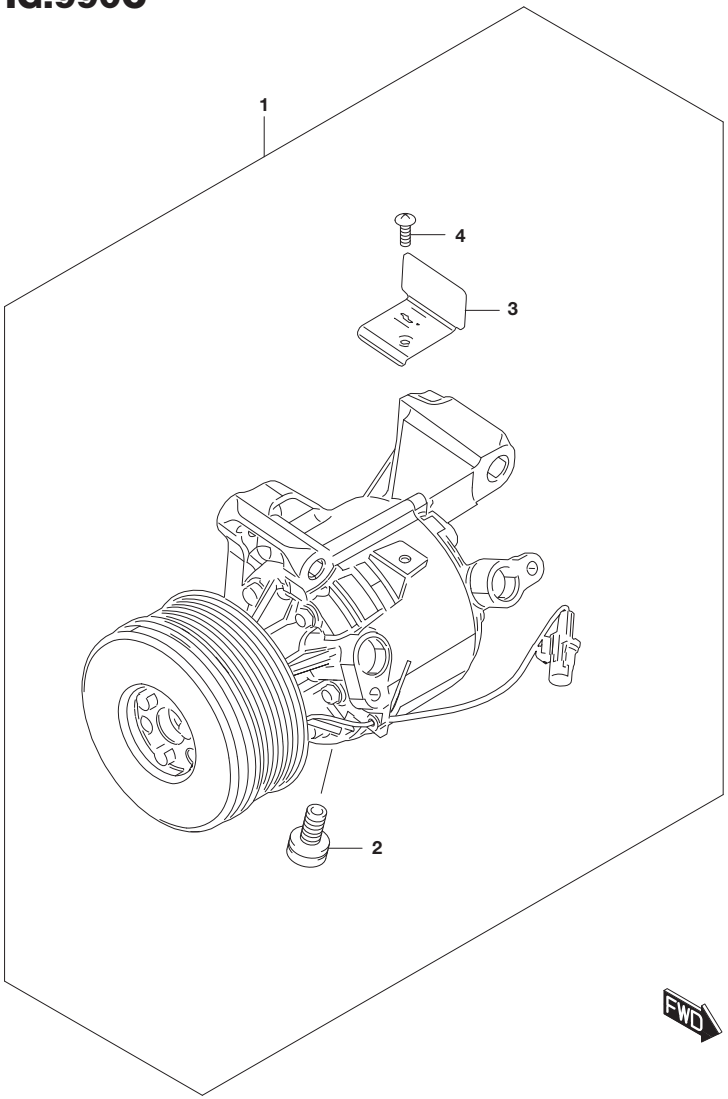

FIG.990C (4-H-6) COMPRESSOR (K14D)

REF NO.	PART NO.	DESCRIPTION	Q'TY	REMARKS
1	95200-74S00	COMPRESSOR ASSY	1	
2	95271-76M00	.VALVE, RELIEF	1	
3	95291-74S00	.BRACKET	1	
4	02112-3510A	.SCREW	1	

APK414-3 P22 990C
COMPRESSOR (3)

10000

PART NO.	FIG.NO.-REF.NO.
11001-50810	101A-1
11001-53820	101C-1
11001-68860	101B-1-1
11001-68880	101B-1-2
11100-50R00	111A-1
11100-53SA0	111C-1
11100-68M00	111B-1
11115-69L00-001	111A-2
	111B-2
	111C-2
11117-68M00	111A-14
	111B-15
	111C-13
11128-68M00	111B-4
	111C-3
11128-68M10	111A-4
	111B-5
	111C-4
11128-69G01	111A-5
	111B-6
	111C-5
11141-50R00	105A-2
	111A-15
11141-53SB0	105C-2
	111C-14
11141-68M02	105B-2
	111B-16
11170-50R01	111A-18
11170-53SA0	111C-16
11170-68M01	111B-18
11178-69L00	111A-20
	111B-20
	111C-18
11189-50R01	105A-3
	111A-19
11189-53SA0	105C-3
	111C-17
11189-68M01	105B-3
	111B-19
11190-76M00	150A-20
	150B-25
	150C-17
11191-53SA0	150C-18
11191-61MA0	150B-26
11191-64R00	150A-21

PART NO.	FIG.NO.-REF.NO.
11193-53SA0	130C-8
11193-61MA0	130B-7
11193-64R00	130A-7
11198-58B00	130A-8
	130B-8
	130C-9
11200-50R10-X12	112A-1
11200-53SA0-X12	112C-1
11200-68M00-X12	112B-1
11216-77E00	111A-6
	111B-8
	111C-7
	112A-5
	112B-5
	112C-2
	206B-1
11216-84MA0	111A-7
	111B-9
	111C-8
11216-90J00	111A-8
11220-50R00	112A-7
11220-68M00	112B-7
	112C-7
11223-50R01	112A-8
11223-68M01	112B-8
	112C-8
11241-65H02	115A-1
	115B-1
	115C-1
11261-69J01	112A-3
	112B-3
	112C-3
11341-84MA0	120A-23
	120B-19
	120C-19
11342-84MB0	120A-24
	120B-20
11342-84MC0	120C-20
11400-53850	105C-1
11401-50821	105A-1
11401-68862	105B-1
11511-50R00	115A-2
11511-53SA0	115C-2
11511-68R01	115B-2
11515-51K03	115A-3
	115B-3
	115C-3
11518-63J20	115A-4
	115B-4
	115C-4

PART NO.	FIG.NO.-REF.NO.
11518-69J00	115A-5
	115B-5
	115C-5
11541-68M00	115B-6
	115C-6
11541-84MA0	115A-6
11551-53S00	300B-1
11561-68M00	300A-7
11562-68M10	300A-8
11563-68M00	300A-10
11610-60R00	128C-1
	128D-1
11610-64R00	128A-1
	128B-1
11610-74S00	128E-1
11620-60R00	128C-2
	128D-2
11620-64R00	128A-2
11620-64R10	128B-2
11620-74S00	128E-2
11631-64R00	128A-3
	128B-3
11643-68M00	128C-3
	128D-3
	128E-3
11644-68M00	128C-4
	128D-4
	128E-4
11645-68M00	128C-5
	128D-5
	128E-5
11650-68M00	128A-4
	128B-4
	128C-6
	128D-6
	128E-6
11651-60R00	128C-7
	128E-7
11651-60R10	128D-7
11651-64R00	128A-5
11651-64R10	128B-5
11652-71L00	128A-6
	128A-7
	128B-6
	128B-7
	128C-8
	128D-8
	128E-8
11749-62G01	286A-5
11851-72B21	206B-3

PART NO.	FIG.NO.-REF.NO.
11910-60R11	128D-15
11910-61M01	128C-15
11910-64R00	128A-17
11910-64R10	128B-17
11910-74S00	128E-15
11930-54P20	128B-18
11930-61M00	128A-18
11930-68M00	128C-16
	128D-16
	128E-16
11958-61M00	199A-2
11958-65G11	199A-1
11959-61M00	199A-4
11959-77R01	199A-5
11966-61M00	199A-3
12100-50832	120A-1
12101-53810	120C-1
12101-68830-025	120A-6-6
	120B-6-6
	120C-6-6
12101-68830-0A0	120A-6-1
	120B-6-1
	120C-6-1
12101-68830-0B0	120A-6-2
	120B-6-2
	120C-6-2
12101-68830-0C0	120A-6-3
	120B-6-3
	120C-6-3
12101-68830-0D0	120A-6-4
	120B-6-4
	120C-6-4
12101-68830-0E0	120A-6-5
	120B-6-5
	120C-6-5
12101-68851	120B-1-1
12101-68860	120B-1-2
12140-53SA0	120C-3
12140-68MA2	120A-3
	120B-3-1
12140-68MC0	120B-3-2
12160-53SA0	120C-4
12160-68M02	120A-4
	120B-4
12163-69J00	120A-5
	120B-5
	120C-5
12221-50R00	120A-7
12221-53SA0	120C-7
12221-68M00	120B-7

PART NO.	FIG.NO.-REF.NO.
12222-50R00	120A-8
12222-53SA0	120C-13
12222-68M00	120B-13
12223-69G00	120A-9
	120B-14
	120C-14
12300-53810	120C-12-1
12300-53810-012	120C-12-2
12300-60840	120A-14-1
	120B-12-1
12300-60840-012	120A-14-2
	120B-12-2
12341-53SA0-0A0	120C-8-1
12341-53SA0-0AA	120C-8-9
12341-53SA0-0B0	120C-8-2
12341-53SA0-0BA	120C-8-10
12341-53SA0-0C0	120C-8-3
12341-53SA0-0CA	120C-8-11
12341-53SA0-0D0	120C-8-4
12341-53SA0-0DA	120C-8-12
12341-53SA0-0E0	120C-8-5
12341-53SA0-0EA	120C-8-13
12341-53SA0-0W0	120C-8-6
12341-53SA0-0WA	120C-8-14
12341-53SA0-0Y0	120C-8-7
12341-53SA0-0YA	120C-8-15
12341-53SA0-0Z0	120C-8-8
12341-53SA0-0ZA	120C-8-16
12341-61P00-0A0	120A-10-1
	120B-8-1
12341-61P00-0AA	120A-10-6
	120B-8-6
12341-61P00-0B0	120A-10-2
	120B-8-2
12341-61P00-0BA	120A-10-7
	120B-8-7
12341-61P00-0C0	120A-10-3
	120B-8-3
12341-61P00-0CA	120A-10-8
	120B-8-8
12341-61P00-0D0	120A-10-4
	120B-8-4
12341-61P00-0DA	120A-10-9
	120B-8-9
12341-61P00-0E0	120A-10-5
	120B-8-5
12341-61P00-0EA	120A-10-10
	120B-8-10
12341-62R70-0A0	120C-10-1
12341-62R70-0AA	120C-10-6

PART NO.	FIG.NO.-REF.NO.
12341-62R70-0B0	120C-10-2
12341-62R70-0BA	120C-10-7
12341-62R70-0C0	120C-10-3
12341-62R70-0CA	120C-10-8
12341-62R70-0D0	120C-10-4
12341-62R70-0DA	120C-10-9
12341-62R70-0E0	120C-10-5
12341-62R70-0EA	120C-10-10
12341-71LA0-0A0	120A-12-1
	120B-10-1
12341-71LA0-0AA	120A-12-6
	120B-10-6
12341-71LA0-0B0	120A-12-2
	120B-10-2
12341-71LA0-0BA	120A-12-7
	120B-10-7
12341-71LA0-0C0	120A-12-3
	120B-10-3
12341-71LA0-0CA	120A-12-8
	120B-10-8
12341-71LA0-0D0	120A-12-4
	120B-10-4
12341-71LA0-0DA	120A-12-9
	120B-10-9
12341-71LA0-0E0	120A-12-5
	120B-10-5
12341-71LA0-0EA	120A-12-10
	120B-10-10
12345-53SA0-0A0	120C-9-1
12345-53SA0-0AA	120C-9-9
12345-53SA0-0B0	120C-9-2
12345-53SA0-0BA	120C-9-10
12345-53SA0-0C0	120C-9-3
12345-53SA0-0CA	120C-9-11
12345-53SA0-0D0	120C-9-4
12345-53SA0-0DA	120C-9-12
12345-53SA0-0E0	120C-9-5
12345-53SA0-0EA	120C-9-13
12345-53SA0-0F0	120C-9-6
12345-53SA0-0FA	120C-9-14
12345-53SA0-0G0	120C-9-7
12345-53SA0-0GA	120C-9-15
12345-53SA0-0H0	120C-9-8
12345-53SA0-0HA	120C-9-16
12345-62R70-0A0	120C-11-1
12345-62R70-0AA	120C-11-6
12345-62R70-0B0	120C-11-2
12345-62R70-0BA	120C-11-7
12345-62R70-0C0	120C-11-3
12345-62R70-0CA	120C-11-8

PART NO.	FIG.NO.-REF.NO.	PART NO.	FIG.NO.-REF.NO.	PART NO.	FIG.NO.-REF.NO.
12345-62R70-0D0	120C-11-4	12620-68M00	120A-18	12840-53S00	122B-3-2
12345-62R70-0DA	120C-11-9		120B-25		122C-3
12345-62R70-0E0	120C-11-5		120C-24	12840-84MA0	122A-3
12345-62R70-0EA	120C-11-10	12623-84MA0	120A-19		122B-3-1
12345-71L00-0A0	120A-11-1	12631-53SA0	120C-17	12860-84MA0	122A-4
	120A-13-1	12631-68M00	120A-21		122B-4
	120B-9-1		120B-17		122C-4
	120B-11-1	12710-50R00	122A-1	12911-53SA0	122C-5
12345-71L00-0AA	120A-11-6	12710-53SA0	122C-1	12911-68M00	122A-5
	120A-13-6	12710-68M00	122B-1		122B-5
	120B-9-6	12720-53SA0	122C-2	12915-53SA0	122C-6
	120B-11-6	12721-50R00	122A-2	12915-68M10	122A-6
12345-71L00-0B0	120A-11-2	12721-68M00	122B-2		122B-6
	120A-13-2	12729-68M00	172A-10	12921-68M00	122A-7
	120B-9-2		172B-8		122B-7
	120B-11-2		172C-1		122C-7
12345-71L00-0BA	120A-11-7	12740-68M00	124A-1	12921-84MA0	122A-8
	120A-13-7		124B-1		122B-8
	120B-9-7	12741-53S00	124C-1		122C-8
	120B-11-7	12742-53S00	124C-2	12931-69L00	122A-9
12345-71L00-0C0	120A-11-3	12742-68M00	124A-2		122B-9
	120A-13-3		124B-2		122C-9
	120B-9-3	12744-53S00	124C-4	12932-24F00	122A-10
	120B-11-3	12750-53S00	124C-3		122B-10
12345-71L00-0CA	120A-11-8	12753-69L00	124A-3		122C-10
	120A-13-8		124B-3	12933-84MA0	122A-11
	120B-9-8		124C-5		122B-11
	120B-11-8	12761-53SA0	124C-7		122C-11
12345-71L00-0D0	120A-11-4	12761-68M00	124A-6	12934-68M00	122A-12
	120A-13-4		124B-6		122B-12
	120B-9-4	12771-53SA0	124C-8		122C-12
	120B-11-4	12771-68M00	124A-7	13110-53SA0	130C-1
12345-71L00-0DA	120A-11-9		124B-7	13110-61MA0	130B-1
	120A-13-9	12772-68M00	124B-8	13110-64R00	130A-1
	120B-9-9		124C-9	13118-61MA0	105C-4
	120B-11-9	12776-68M00	124A-8		130B-2
12345-71L00-0E0	120A-11-5		124B-9		130C-2
	120A-13-5		124C-10	13118-64R00	130A-2
	120B-9-5	12781-69G00	124A-9	13170-61MA0	150B-1
	120B-11-5		124B-10	13170-64R00	150A-1
12345-71L00-0EA	120A-11-10		124C-11	13172-61MA0	150A-2
	120A-13-10	12811-53SA0	124C-12		150B-2
	120B-9-10	12811-68M00	124A-10	13175-68M00	150B-3
	120B-11-10		124B-11	13176-67J00	150A-3
12610-50R00	120A-15	12812-50M00	124A-11		150B-4
12610-53S00	120C-15		124B-12	13176-68M00	150B-5
12610-68M00	120B-15		124C-13	13177-68M00	150A-4
12619-53SA0	120C-16	12831-53SA0	124C-14		150B-6
12619-69G10	120A-16	12831-68M00	124A-12	13178-68M00	150B-7
	120B-16		124B-13	13179-68M00	150B-8

PART NO.	FIG.NO.-REF.NO.	PART NO.	FIG.NO.-REF.NO.	PART NO.	FIG.NO.-REF.NO.
13400-61MA0	142A-1	13765-54P00	150A-11		158B-5
	142B-1		150B-20		158C-5
13400-76R00	142C-1	13766-53SA0	150C-10	13947-50R00	158A-6
13421-61MA0	105C-5	13766-60R00	150B-21		158B-6
	130B-3	13766-86R00	150A-12	13947-53SA0	158C-6
	130C-3	13767-64R00	150A-13	13948-85560	158A-7
13421-64R00	130A-3	13768-50R00	150A-14	13948-86P00	158B-8
13620-61MA0	159A-1	13780-50R00	150A-6		158C-8
	159B-1	13780-53SA0	150C-2	13948-86PA0	158A-8
13620-74S00	159C-1	13780-68M00	150B-10		158B-7
13621-74S00	159C-2	13800-53S00	150C-20		158C-7
13622-74S00	159C-3	13800-69L00	150A-31	13950-61MA0	158B-18
13626-61MA0	159A-2		150B-28	13950-64R00	158A-21
	159B-2	13811-53SA0	150C-6	13951-68M00	158B-19
	159C-4	13812-84MA0	150A-7	13952-53SA0	153A-1
13643-74S00	159C-5		150B-11	13955-75F50	105A-5
13644-74S00	159C-6		150C-3		105B-5
13650-56B00	288A-1	13813-84MA0	150A-8		158A-22
	288B-1		150B-12		158B-20
13650-73H00	188A-30		150C-4		159B-8
	188B-36	13881-53SA0	150C-11	13960-53SA0	153A-3
	18PA-1	13881-61MA0	150B-22	13960-61MA0	159B-9
13660-74S00	159C-7	13881-64R00	150A-15	13960-64R00	158A-23
13661-60R10	159B-3	13882-53SA0	150C-13	13961-53SA0	153A-2
13661-64R10	159A-3	13891-79J80	159A-7	13970-53SA0	153A-4
13661-74S00	159C-8		159C-11	13970-64R00	159A-9
13662-61MA0	159B-4	13892-79J80	159B-6	13970-68M00	159B-10
13662-64R00	159A-4		159C-12	13981-64R00	159A-10
13662-74S00	159C-9	13894-68L50	159A-8	14117-86P00	158A-9
13663-61MA0	159B-5		159B-7		158B-9
13663-64R00	159A-5	13900-50R01	158A-1		158C-9
13664-64R00	159A-6	13900-53SA0	158C-1	14118-53SA0	154D-1
13670-74S00	159C-10	13900-86P01	158B-1	14118-70G50	154A-1
13700-53SA0	150C-1	13923-61MA0	158B-23		154B-1
13700-61MA0	150B-9	13923-64R00	158A-19		154C-1
13700-64R00	150A-5	13924-68H50	158A-20	14118-86P00	158A-10
13711-64R00	150A-38		158B-24		158B-10
13712-64R00	150A-39	13930-50R00	158A-2		158C-10
13723-84MB0	150A-9	13930-53SA0	158C-2	14119-86P00	158A-11
	150B-13	13930-86P00	158B-2		158B-11
	150C-5	13940-53SA0	158C-3		158C-11
	188C-1	13940-76JA0	158A-3	14120-53SA0	158C-12
13761-64R00	150A-33	13940-86P00	158B-3	14121-53SA0	154D-2
13761-68M00	150B-17	13941-50R00	158A-4	14121-60R10	154C-2
13762-64R00	150A-34	13941-53SA0	158C-4	14121-64R10	154A-2
13762-68M00	150B-18	13941-86P00	158B-4	14121-86P00	154B-2
13763-64R00	150A-35	13945-50R00	105A-4	14144-86P00	158A-12
13763-68M00	150B-19		158A-5		158B-12
13764-86R00	150A-10	13945-86P00	105B-4	14181-53SA0	105C-7
13765-53SA0	150C-9		105C-6		158C-13

PART NO.	FIG.NO.-REF.NO.	PART NO.	FIG.NO.-REF.NO.	PART NO.	FIG.NO.-REF.NO.
14181-86P00	105A-6		156C-13	15815-60R00	160B-4
	105B-6	14281-61M00	156A-7		160C-4
	158A-13		156B-7	15815-64R00	160A-4
	158B-13	14281-61M20	156C-7	15840-53SA0	172C-8
14182-53SA0	105C-8	14300-60R01	156A-14	15840-68M00	172A-7
	154D-3		156B-14		172B-13
14182-58B10	156A-1	14300-74S00	156C-14	15850-53SA0	172C-9
14182-78K00	156A-11	14357-72J00	156A-8	15850-61MA0	172B-14
	156B-11		156A-15	15850-64R00	172A-15
	156C-11		156B-8	15855-53SB0	172C-10
14182-86P00	105A-7		156B-15	15855-61MA0	172B-15
	105B-7		156C-8	15855-64R00	172A-16
	154A-3		156C-15	15873-61M00	160A-8
	154B-3		750A-35		160B-5
	154C-3	14492-82610	156B-9		160C-5
14183-79J00	156B-1		156C-9	15891-61M00	160A-6
	156C-1	15100-60R00	160B-1		160B-6-1
14183-79J10	156B-2		160C-1	15891-74S00	160B-6-2
	156C-2	15100-64R00	160A-1		160C-6
14184-60G00	156A-2	15210-53S00	172C-2	15892-61M00	160A-7
14190-60R00	156B-3-1	15210-68M00	172A-11		160B-7-1
14190-74S00	156B-3-2		172B-9	15892-74S00	160B-7-2
	156C-3	15212-53S00	172C-3		160C-7
14190-86R00	156A-3	15212-68M00	172A-12	15895-81P00	172C-11
14220-53SA0-H02	154D-4		172B-10	16100-50RB0	176A-1
14220-60R00-H02	154B-4	15215-61MA0	172B-11	16100-53S00	176C-1
14220-60R10-H02	154C-4	15215-64R00	172A-13	16100-68M01	176B-1
14220-64R10-H02	154A-4	15700-50811	172A-6	16114-69J00	115A-7
14231-54P00	156A-4	15700-53S00	172C-7		115B-7
	156B-4	15700-68811	172B-6		115C-7
	156C-4	15710-53S00	172C-5	16115-50M00	176A-10
14231-61M00	156A-5	15710-68M10	172A-1		176B-10
	156B-5		172B-1		176C-3
	156C-5	15711-68M00	172A-2	16116-69GE0	176A-2
14231-61M20	156A-12		172B-2		176B-2
	156B-12	15712-68M00	172A-3		176C-2
	156C-12		172B-3	16118-50R00	105A-8
14250-60R00	156B-6	15713-68M00	172A-4		176A-11
	156C-6		172B-4	16118-53S00	105C-9
14250-86R00	156A-6	15715-53S00	172C-6		176C-4
14271-53SB0	154D-5	15715-68M00	172A-5	16118-68M00	105B-8
14271-60R10	154C-5		172B-5		176B-11
14271-64R10	154A-5	15716-53SA0	348C-1	16119-53S00	124C-17
14271-86P00	154B-5	15811-54P00	160A-3	16130-50R00	176A-3
14272-53SB0	154D-6		160B-2	16130-68M00	176B-3
14272-60R10	154C-6		160C-2	16151-68M00	176A-4
14272-64R10	154A-6	15812-61M00	160A-2		176B-4
14273-60R10	154C-7		160B-3-1	16152-68M00	176A-5
14281-57L00	156A-13	15812-61M10	160B-3-2		176B-5
	156B-13		160C-3	16510-82703	115A-14

PART NO.	FIG.NO.-REF.NO.	PART NO.	FIG.NO.-REF.NO.	PART NO.	FIG.NO.-REF.NO.
	115B-14	17511-68M00	180B-5	17760-60R00	184A-7
	115C-14	17511-81PB0	180A-5		184B-7
16520-69L00	115B-15	17512-61P00	180A-6	17791-86P00	184A-18
	115C-15		180B-6		184B-18
16520-85L00	115A-15		180C-4		184C-8
16550-51KA0	176A-12	17521-53SA0	120C-23	17792-86P00	184B-19
	176B-12	17521-61MA0	120B-23	17830-50R00	188A-2-1
16550-53SA0	176C-5	17521-64R00	120A-17	17830-50R10	188A-2-2
16560-53S00	112C-9	17522-53S00	120C-26	17830-74S00	188C-2
16570-84MA0	112A-9		952E-1	17830-86P00	188B-1
	112B-9		952F-1	17830-86P10	188A-1
16572-84MA0	112A-10	17530-50M00	176B-18	17840-74S00	188C-3
	112B-10	17530-53SA0	120C-27	17840-86P00	188B-2-1
16580-53S00	176C-6	17530-68PB0	176A-18	17840-86P10	188B-2-2
16600-53SA0	112C-16	17540-53S00	120C-28	17850-74S00	188C-4
16600-68M00	112A-16	17540-53S10	120C-29	17852-60R00	188A-3
	112B-16	17545-50M00	300A-9		188B-3
16621-53SA0	112C-17	17561-61MA0	188A-31	17852-74S00	188C-5
16621-68M00	112A-17		188B-37	17853-60R00	188B-4
	112B-17	17660-74S00	188C-38	17853-86R00	188A-4
16710-53SA0	112C-10	17670-53S00	18PA-2	17854-60R00	188A-5
16710-68M00	112A-11	17670-65G00	188A-32		188B-5
	112B-11		188B-38		188C-6
16910-53SA0	111C-21	17690-53S00	18PA-3	17855-60R00	188B-6
16910-68M00	111A-23	17690-68M00	188A-33-1	17855-64R00	188A-6
	111B-23		188B-39-1	17855-74S00	188C-7
16920-50M01	111A-24	17690-68M10	188A-33-2	17861-86R00	184A-13
	111B-24		188B-39-2	17861-86R10	184A-14
	111C-22	17699-61P01	105A-9	17862-55P00	184B-13
17100-60R00	184A-1		105B-9		184C-9
	184B-1		105C-10	17862-55P10	184B-14
17100-74S00	184C-1		188A-34		184C-10
17111-60R00	184A-2		188B-40	17863-56S00	184A-15
	184B-2		18PA-4		184B-17
17111-60R10	184A-3	17699-68M00	105A-10		184C-11
	184B-3		105B-10		184C-12
17120-60R00	184A-4		105C-11	17864-60R00	188B-7
	184B-4		188A-35	17864-64R00	188A-7
17120-60R10	184A-5		188B-41	17866-60R00	188B-8
	184B-5		18PA-5	17866-64R00	188A-8
17129-56F00	184A-6	17700-60R00	184A-9	17866-74S00	188C-8
	184B-6		184B-9-1	17867-86P00	188A-9
17211-74S00	184C-2	17700-60R10	184B-9-2		188B-9
17212-74S00	184C-3	17700-76S00	184C-5	17870-74S00	188C-39
17213-74S00	184C-4	17751-61A00	184A-10	17871-60R00	188B-29
17400-53S00	180C-1		184B-10	17871-64R00	188A-25
17400-69L02	180A-1		184C-6	17871-74S00	188C-40
	180B-1	17759-82K00	184A-11	17872-60R00	188B-30
17417-53S00	180C-2		184B-11	17872-64R00	188A-26-1
17511-53S00	180C-3		184C-7	17872-64R50	188A-26-2

PART NO.	FIG.NO.-REF.NO.	PART NO.	FIG.NO.-REF.NO.	PART NO.	FIG.NO.-REF.NO.
17872-74S00	188C-41		190F-1	18218-64R10	154A-12
17873-74S00	188C-42		190G-1	18351-54P00	190A-7
17874-74S00	188C-43	18118-53SA0	130C-10		190B-8
17875-74S00	188C-44	18118-68M00	130A-9		190C-9
17875-86P00	188B-31		130B-9		190E-10
17876-72L00	188B-32	18119-65H70	158A-25	18351-74S00	190D-2
17878-54M00	184A-16		158B-26		190F-2
17879-54LA0	188B-33	18122-53SA0	153A-7		190G-2
17879-55P00	184C-13	18122-61MA0	158B-27	18352-74S00	190D-3
17879-62J50	184B-15	18122-64R00	130A-14		190F-3
	184C-14	18123-61MA0	158B-28		190G-3
17879-64R00	184A-17	18123-64R00	158A-26	18417-68M00	190C-2
17879-79M50	184B-16	18124-61MA0	158B-29		190D-4
17880-74S00	188C-9	18124-64R00	158A-27		190E-2
17880-86P00	188B-10	18126-53SA0	153A-8		190F-4
17890-74S00	188C-10	18126-61MA1	159B-12	18417-74S00	190G-4
17890-86P00	188B-11	18126-64R00	150A-25	18529-53SA0	192A-2
17891-86P00	188B-12	18127-53SA0	153A-9	18530-53SA0	192A-3
17910-56P00	188A-10	18127-61MA1	159B-13	18530-53SB0	192A-4
	188B-13	18127-64R00	150A-26	18533-53SA0	192A-5
17915-86P00	188A-12	18129-53SA0	153A-10	18533-68P00	192A-6
	188B-15	18129-61MA1	159B-14	18534-53SA0	105C-12
17920-75F00	188A-11	18129-64R00	150A-27		130C-4
	188B-14	18130-53SA0	194A-1	18560-74S00	190D-5
17930-74S00	188C-11	18130-68M00	188A-41		190F-5
17931-60R00	188A-13		188B-47		190G-5
	188B-16	18135-53SA0	194A-2	18560-83J00	190A-8
17932-56S00	188C-12	18135-68M00	188A-42		190B-9
17932-76G00	188A-14		188B-48		190C-10
	188B-17	18213-53SA0	154D-10		190E-11
17933-60R00	188A-15	18213-53SB0	154D-11	18561-60R30	190D-6
	188B-18	18213-60RA0	154B-11	18561-60R40	190F-6
17935-74S00	188C-13	18213-60RB0	154A-7	18561-61M00	190A-6
17939-60R00	188A-17		154B-12		190C-8
	188B-20		154C-12	18561-61M10	190B-7
18111-53SA0	192A-1	18213-64R10	154A-8		190E-9
18111-64R00	130A-12		154C-13	18561-74S00	190G-6
18112-50R00	150A-23	18214-86P00	154B-13	18562-60R00	190C-6
18112-53SA0	153A-5		154C-14	18562-60R10	190E-6
18112-64R00	130A-13	18215-53SA0	154A-9	18562-60R30	190D-7
18114-68M00	190A-1		154C-15	18562-60R40	190F-7
	190B-1		154D-12	18562-64R00	190A-4
	190C-1	18216-53SA0	154D-13	18562-64R10	190B-4
	190E-1	18216-60R10	154C-16	18563-61M10	190B-6
18114-80F00	158A-24	18216-64R10	154A-10		190E-8
	158B-25	18217-53SA0	154D-14	18564-60R00	190C-5
18117-68M00	150A-24	18217-60R10	154C-17		190E-5
	153A-6	18217-64R10	154A-11	18564-60R30	190D-8
	159B-11	18218-53SA0	154D-15		190F-8
18117-78K00	190D-1	18218-60R10	154C-18	18564-64R00	190A-3

PART NO.	FIG.NO.-REF.NO.	PART NO.	FIG.NO.-REF.NO.	PART NO.	FIG.NO.-REF.NO.
	190B-3	18725-74S00	188C-19	22932-60R10	248B-6
18564-74S00	190G-7			22932-64R10	248A-6
18565-74S00	190D-9			22933-60R10	248B-7
	190F-9			22933-64R10	248A-7
	190G-8			22935-79J10	188C-20
18567-61M00	190A-9			23810-61M00	202A-4
	190B-10				202B-4
	190C-11	20000			202C-4
	190E-12				202D-4
18567-74S00	190D-10			23820-79J00	202A-5
	190F-10	20008-61MA1	200A-1-1		202B-5
	190G-9	20008-61MG0	200A-1-2		202C-5
18568-74S00	190D-11	20008-68M01	200B-1-1		202D-5
	190F-11	20008-68M60	200B-1-2	23830-60R00	202C-6
	190G-10	20019-53S11	210B-1-1	23830-60R20	202D-6
18569-74S00	190D-12	20019-53SH1	210B-1-2	23830-61M20	202B-6
	190F-12	20019-86R11	210A-1-1	23830-64R00	202A-6
	190G-11	20019-86RH1	210A-1-2	23840-54L00	202C-7
18570-61M00	190A-11	22100-60R00	202C-1-1		202D-7
	190B-12		202D-1-1	23840-86J00	202A-7
	190C-13	22100-60R40	202C-1-2		202B-7
	190E-14		202D-1-2	23856-64JA0	202C-8
18570-74S00	190D-13	22100-64R00	202A-1		202D-8
	190F-13		202B-1	23856-79J00	202A-8
	190G-12	22400-60R00	202C-2-1		202B-8
18571-74S00	190D-14		202D-2-1	23870-61M00	202A-9
	190F-14	22400-60R40	202C-2-2		202B-9
	190G-13		202D-2-2		202C-9
18580-60R00	190D-15	22400-64R00	202A-2		202D-9
18581-72L00	190A-10		202B-2	23871-54L01	202C-10
	190B-11	22611-68M10	210A-3		202D-10
	190C-12		210B-3	23874-64J00	202A-10
	190E-13	22620-68M10	210A-4		202B-10
18590-53S20	153A-20		210B-4		202C-11
18590-53SA0	142C-2	22631-68M10	210A-5		202D-11
18590-68M10	130B-12		210B-5	23881-61M00	202A-11
	142A-2	22710-50R11	210A-2		202C-12
18590-68M20	159A-14	22710-68M11	210B-2	23881-61M20	202B-11
	159B-21	22800-78MT0	214A-1		202D-12
18640-53S00	300B-4	22831-78M10	214A-4	23915-63J40	952A-15
18640-61MA0	112A-19	22858-78M10	214A-5		952B-15
	112B-19	22861-78M10	214A-2		952C-15
18710-53SA0	192A-7	22883-79C10	214A-3		952D-15
18715-53SA0	192A-8	22893-78M10	214A-6		952E-10
18720-53SA0	192A-9	22893-79C10	240A-4		952F-10
18720-74S00	188C-14	22894-78M10	214A-7	24100-78MT0	216A-1
18721-74S00	188C-15	22911-60R10	248B-4	24111-61MA3	204A-1
18722-74S00	188C-16	22911-64R10	248A-4	24111-68M00	204B-1
18723-74S00	188C-17	22931-60R10	248B-5	24114-51R00	204A-2
18724-74S00	188C-18	22931-64R10	248A-5	24119-61MA0	204A-3

PART NO.	FIG.NO.-REF.NO.
24122-68M10	216A-4-2
24122-78M10	216A-4-1
24123-78M10	216A-5
24131-68M00	204B-15-1
24131-68M20	204B-15-2
24131-77M00	204A-13
24142-68M10	226B-1
24142-78M10	226A-1
24143-68M10	226B-2
24143-78M10	226A-2
24144-78M10	226A-3
	226B-3
24147-78MT0	226A-4
	226B-4
24155-54L20	204B-2
24191-78M10	216A-2
24192-78M10	216A-3
24200-50R10	228A-1-1
24200-68M10	228A-1-2
24230-59J01	204A-4
24230-68M00	204B-3-1
24230-68M20	204B-3-2
24240-51R00	204A-5
24240-68M00	204B-4-1
24240-68M20	204B-4-2
24250-68M00	204B-5-1
24250-68M20	204B-5-2
24255-54L00	204B-6
24260-68M00	204B-7-1
24260-68M20	204B-7-2
24265-54L00	204B-8
24266-54L00-181	204B-9-1
24266-54L00-186	204B-9-2
24266-54L00-191	204B-9-3
24266-54L00-196	204B-9-4
24266-54L00-201	204B-9-5
24266-54L00-206	204B-9-6
24266-54L00-211	204B-9-7
24266-54L00-216	204B-9-8
24266-54L00-221	204B-9-9
24266-54L00-226	204B-9-10
24266-79JA0-181	204B-16-1
24266-79JA0-186	204B-16-2
24266-79JA0-191	204B-16-3
24266-79JA0-196	204B-16-4
24266-79JA0-201	204B-16-5
24266-79JA0-206	204B-16-6
24266-79JA0-210	204B-16-7
24266-79JA0-213	204B-16-8
24266-79JA0-216	204B-16-9

PART NO.	FIG.NO.-REF.NO.
24266-79JA0-219	204B-16-10
24266-79JA0-222	204B-16-11
24266-79JA0-225	204B-16-12
24266-79JA0-228	204B-16-13
24284-54L00	204B-10
24284-61MA0	204A-6
24285-61MA0	204A-7
24295-79JA0-104	204B-11-1
24295-79JA0-108	204B-11-2
24295-79JA0-112	204B-11-3
24295-79JA0-116	204B-11-4
24295-79JA0-120	204B-11-5
24295-79JA0-124	204B-11-6
24295-79JA0-128	204B-11-7
24295-79JA0-132	204B-11-8
24295-79JA0-136	204B-11-9
24295-79JA0-140	204B-11-10
24295-79JA0-144	204B-11-11
24295-79JA0-148	204B-11-12
24295-79JA0-152	204B-11-13
24295-79JA0-156	204B-11-14
24295-79JA0-160	204B-11-15
24295-79JA0-164	204B-11-16
24295-79JA0-168	204B-11-17
24295-79JA0-172	204B-11-18
24295-79JA0-176	204B-11-19
24295-79JA0-180	204B-11-20
24295-79JA0-184	204B-11-21
24295-79JA0-188	204B-11-22
24295-79JA0-192	204B-11-23
24295-79JA0-196	204B-11-24
24311-57L00	204B-17
24311-59J00	204A-14
24315-54L00	204B-18
24321-59J01	204A-15
24321-68M00	204B-19
24325-54L00	204B-20
24331-68M00	204B-21-1
24331-68M20	204B-21-2
24331-70C00	204A-16
24336-54L00-200	204B-22-1
24336-54L00-210	204B-22-2
24336-54L00-220	204B-22-3
24336-54L00-230	204B-22-4
24336-54L00-240	204B-22-5
24336-54L00-250	204B-22-6
24336-80J00	204A-17
24341-51R00	204A-18
24341-68M00	204B-23-1
24341-68M20	204B-23-2

PART NO.	FIG.NO.-REF.NO.
24351-51R00	204A-19
24351-68M00	204B-24-1
24351-68M20	204B-24-2
24355-54L00	204B-25
24361-68M00	204B-26-1
24361-68M20	204B-26-2
24381-54L00	204B-27
24382-54L00	204B-28
24383-79JA0	204B-29
24395-54L00-105	204B-30-1
24395-54L00-110	204B-30-2
24395-54L00-115	204B-30-3
24395-54L00-120	204B-30-4
24395-54L00-125	204B-30-5
24395-54L00-130	204B-30-6
24395-54L00-135	204B-30-7
24395-54L00-137	204B-30-8
24395-54L00-140	204B-30-9
24395-54L00-142	204B-30-10
24395-54L00-145	204B-30-11
24395-54L00-147	204B-30-12
24395-54L00-150	204B-30-13
24395-54L00-152	204B-30-14
24395-54L00-155	204B-30-15
24395-54L00-160	204B-30-16
24395-54L00-165	204B-30-17
24395-54L00-170	204B-30-18
24395-54L00-175	204B-30-19
24395-54L00-180	204B-30-20
24395-54L00-185	204B-30-21
24395-54L00-190	204B-30-22
24395-54L00-195	204B-30-23
24395-54L00-200	204B-30-24
24400-54L00	204B-33
24400-64R01	204A-26
24401-54L00	204B-34
24403-54L00	204B-50
24410-54L00	204B-35
24410-59J00	204A-27
24420-55G20	204A-28
24420-70L00	204B-36
24424-54L40	204B-37
24430-64R00	204A-29
24432-60A00	204A-30
24435-54L00	204B-38
24435-84A20	204A-31
24439-54L00	204B-39
24442-70C00	204A-32
24451-70C00	204A-33
24452-54L00	204B-40

PART NO.	FIG.NO.-REF.NO.
24452-61MA0	204A-34
24471-54L00	204B-41
24471-64R00	204A-35
24472-60B00	204A-36
24474-79JB0	204B-42
24551-70C02	204A-39
24551-79JA0	204B-43
24555-79JA0	204B-44
24560-54L00	204B-46
24560-70C60	204A-40
24565-60B00	204A-41
24571-54L20	204B-45
24580-57L00	204B-47
24581-54L00	204B-31
24585-79JA0-176	204B-48-1
24585-79JA0-184	204B-48-2
24585-79JA0-192	204B-48-3
24585-79JA0-200	204B-48-4
24585-79JA0-208	204B-48-5
24585-79JA0-216	204B-48-6
24585-79JA0-224	204B-48-7
24585-79JA0-232	204B-48-8
24585-79JA0-240	204B-48-9
24585-79JA0-248	204B-48-10
24611-68M10	226B-5
24611-76R10	226A-5
24631-65M70	226A-6
24631-68M10	226B-6
24700-78M10	240A-1
24701-78M10	240A-2
24710-68M10	240A-3
24711-54P02	206A-1
24711-68M00	206B-4
24711-78M10	240A-6
24712-78M10	240A-7
24715-78M10	240A-9
24719-79JA0	206B-5
24720-78MT0	240A-8
24721-61MA1	206A-2
24721-68M00	206B-6
24721-78MT0	240A-12
24722-78MT0	240A-14
24725-59J10	240A-16
	240A-17
24725-61MA0	206A-3
24725-79C10	240A-18
24726-59JT0	240A-19
	240A-21
24727-78M10	226A-7
	226B-7

PART NO.	FIG.NO.-REF.NO.
24728-60MA0	206A-4
24729-60G10	240A-23
	240A-24
24730-54G21	206A-11
24733-54L00	206B-7
24734-54L00	206B-8
24745-59J00	240A-25
24752-59J10	240A-27
24761-78M10	240A-26
24771-78M10	244A-8
24772-54PT0	244A-7
24772-78M10	244A-9
24774-78M10	240A-29
24775-78M10	240A-30
24776-78MT0	240A-28
24777-78MT0	248A-1
	248B-1
24778-78M10	248A-3
	248B-3
24779-78M10	248A-2
	248B-2
24792-56P00	298A-4-1
24792-56P10	298A-4-2
24810-70C00	206A-13
24811-54L00	206B-9
24815-79J00	206A-15
24821-59J00	206B-10
24825-63J00	206B-11
24825-69L00	206A-17
24842-60G10	240A-20
	240A-22
24855-54P10	240A-31
24855-71L00	206A-21
24860-54P10	240A-32
24861-71B70	206B-12
24910-68M10	220B-1
24910-78M10	220A-1
24911-78M10	220A-2
	220B-2
24912-68M10	220B-3
24912-78M10	220A-3
24913-68M10	220B-4
24913-78M10	220A-4
24914-78M10	220A-5
	220B-5
24931-78M10	220A-6
	220B-6
24932-78M10	220A-7
	220B-7
24933-68M10	220B-8

PART NO.	FIG.NO.-REF.NO.
24933-78M10	220A-8
24934-68M10	220B-9
24934-78M10	220A-9
24940-68M10	220B-10
24940-78M10	220A-10
24941-68M10	220B-11
24941-78M10	220A-11
24942-68M10	220B-12
24942-78M10	220A-12
24951-68M10	220B-13
24951-78M10	220A-13
24952-68M10	220B-14
24952-78M10	220A-14
24953-68M10	220B-15
24953-78M10	220A-15
24954-68M10	220B-16
24954-78M10	220A-16
24955-68M10	220B-17
24955-78M10	220A-17
24956-68M10	220B-18
24956-78M10	220A-18
24957-68M10	220B-19
24957-78M10	220A-19
24958-68M10	220B-20
25010-51810	208A-8
25231-60MA0	208A-1
25240-54L40	208B-1
25255-60B01	208B-2
25291-70C00	208A-2
25311-54L00	208B-15
25321-68R01	208B-36
25321-74PE0	208A-9
25401-54L22	208B-3
25401-71L20	208A-3
25402-54L02	208B-4
25402-71L20	208A-4
25403-54L02	208B-5
25403-71L01	208A-5
25404-54L01	208B-6
25460-54L02	208B-7
25460-70C00	208A-6
25464-79JA0	208B-8
25491-54L40	208B-9
25540-68M00	208B-14
25559-79J00	208B-23
25570-70L00	208B-24
25574-74B00	208A-10
25576-54L00	208B-26
25577-62MA0	208B-16
25580-54L60	208B-37

PART NO.	FIG.NO.-REF.NO.
25586-54L00	208B-17
25587-54L00	208B-18
25588-54L00	208B-19
25591-54L00	208B-25
25592-54L00	208B-38
25610-68M00	208B-27
25620-62MA0	208B-28
25910-78M10	246A-1
25911-78M10	246A-2
25912-78M10	246A-3
25914-78M10	246A-4
25915-78M10	246A-5
25918-78M10	246A-6
25919-78M10	246A-7
25920-78M10	246A-8
25925-59J10	246A-9
25961-78M10	246A-10
25962-78M10	246A-11
25970-54P10	260C-1
25981-60G10	240A-10
25991-60G10	226A-8
	226B-8
	240A-33
	240A-47
	246A-12
	246A-13
26131-78M10	240A-48
26132-78M10	226A-9
	226B-9
26142-54P10	226A-10
	226B-10
26445-78M10	214A-8
26449-78M10	214A-9
26500-54P10	244A-1
26512-78M10	244A-2
26586-73KR0	244A-3
26587-78M10	244A-4
26588-78M10	244A-5
26700-68M10	216A-6-2
26700-78M10	216A-6-1
26711-78M10	216A-7
26722-78M10	216A-8
26731-78MT0	230A-2
26732-78M10	230A-1
26733-78M10	230A-3
	230A-4
26751-78M10	230A-5
26752-78M10	230A-6
26771-78M10	234A-13
	234B-13

PART NO.	FIG.NO.-REF.NO.
26800-68M10	234A-1
	234B-1
26812-78M10	234A-3
	234B-3
26813-78M10	234A-4
	234B-4
26814-78M10	234A-5
	234B-5
26815-78M10	234A-6
	234B-6
26821-78M10	234A-7
	234B-7
26822-78M10	234A-8
	234B-8
26823-78M10	234A-9
	234B-9
26824-78MT0	234A-10
	234B-10
26825-78M10	234A-11
	234B-11
26826-68MT0	234B-2
26826-78MT0	234A-2
26851-68M10	234B-12
26851-78M10	234A-12
27100-54P00	267A-1
27110-61M10	288A-2
	288B-2
27300-61850	282A-1
	282B-1
27300-64RJ0	272E-1-2
27300-65M70	272E-1-1
27300-68M10	272F-1-1
27300-68MH0	272F-1-2
27301-57810	291A-1
27315-63J00	282A-2
	282B-2
	291A-2
27331-61MA0	272A-1
	272B-1
	272C-1
	272D-1
27331-78FJ1	282A-3
	282B-3
27341-61M00	282A-4
	282B-4
27341-61MA0	272A-2
	272B-2
	272C-2
	272D-2
27351-62B00	282A-5

PART NO.	FIG.NO.-REF.NO.
	282B-5
27351-80J00	272A-3
	272B-3
	272C-3
	272D-3
27411-54L00	272A-4
	272C-4
27411-57L00	282A-6
	282B-6
27411-64R40	272B-4
	272D-4
27431-57LA0	272A-5
27431-68M00	272C-5
27432-54LA0	272A-6
	272B-5
	272C-6
	272D-5
27450-57L00	282A-7
	282B-7
27453-63J00-230	282A-11-2
	282B-11-2
27453-63J00-235	282A-11-3
	282B-11-3
27453-63J00-240	282A-11-4
	282B-11-4
27453-63J00-245	282A-11-5
	282B-11-5
27453-63J00-250	282A-11-6
	282B-11-6
27453-63J00-255	282A-11-7
	282B-11-7
27453-63J00-260	282A-11-8
	282B-11-8
27453-63J00-265	282A-11-9
	282B-11-9
27453-63J00-270	282A-11-10
	282B-11-10
27453-63J10	282A-11-1
	282B-11-1
27453-78MT0	272E-2
	272F-2
27481-54P10	272E-3-2
	272F-3-2
27481-78M10	272E-3-1
	272F-3-1
27482-68M10	272F-4
27482-78M10	272E-4
27511-64R00	272A-7
	272B-6
27511-68M00	272C-7-1

PART NO.	FIG.NO.-REF.NO.
	272D-6-1
27511-68M20	272C-7-2
	272D-6-2
27521-79JA0	272A-8
	272B-7
	272C-8
	272D-7
27524-79JA0	272A-9
	272B-8
	272C-9
	272D-8
27561-61M01	286A-2
27562-61M00	286A-4
27610-79J01	288A-3
	288B-3
27611-54P10	240A-5-2
27611-78M10	240A-5-1
27611-79J00	288A-4
	288B-4
27612-78M10	240A-11
27620-61M00	288A-5
27620-61M10	288B-5
27780-61M00	282A-12
	282B-12
27811-54P20	291A-3-2
27811-54P30	291A-3-3
27811-57L50	291A-3-1
27861-54L01	291A-4
27966-54P00	282B-31
27978-71L00	202B-12
	202D-19
27991-65D01	206A-18
	206B-13
	282A-31
27991-77M10	240A-34
28100-61M20	260A-1
28100-62M03-HTV	260B-1
28110-54P50	264A-1-1
	264B-1-1
28110-54PJ0	264A-1-2
	264B-1-2
28113-54P21-C48	260A-2
28113-62M02-C48	260B-2
28130-61M40-5PK	260A-3
28130-62M20-5PK	260B-3
28139-62M00	260B-4
28151-61M10-5PK	264B-2
28151-61M30-5PK	264A-2
28152-61M10-W9J	264A-3
	264B-3

PART NO.	FIG.NO.-REF.NO.
28153-61M50	264B-4
28153-61M70	264A-4
28156-61M10-5PK	264B-5
28156-61M30-5PK	264A-5
28157-61M10	264A-6
	264B-6
28157-61M30-5PK	264A-7
28160-61M51-GJL	264A-8
	264B-7
28166-61M10	264A-9
	264B-8
28180-61M10	264B-9
28180-61M30	264A-10
28181-61M10	264A-11
	264B-10
28182-61M10	264A-12
	264B-11
28210-54P10	260C-2
28221-54P10	260C-3
28225-54P10	260C-4-1
28225-60R10	260C-4-2
28300-60R00	260B-5
28300-61M00	260A-4
28391-60R00	260B-10
28391-61M00	260A-9
28392-68L00	260A-10
	260B-11
28393-68L00	260A-11
	260B-12
28551-54P30	360B-13-1
28551-61M10	360B-13-2
29000-54P21	290A-1-2
29000-54P31	290A-1-3
29000-61M40	290A-1-1
29111-54P20	291A-5-2
29111-54P30	291A-5-3
29111-61M10	291A-5-1
29131-57L00	291A-6
29152-57L00	298A-7
29261-57L00-030	298A-8-1
29261-57L00-185	298A-8-2
29261-57L00-188	298A-8-3
29261-57L00-191	298A-8-4
29261-57L00-194	298A-8-5
29261-57L00-197	298A-8-6
29261-57L00-200	298A-8-7
29261-57L00-203	298A-8-8
29261-57L00-206	298A-8-9
29261-57L00-209	298A-8-10
29261-57L00-212	298A-8-11

PART NO.	FIG.NO.-REF.NO.
29261-57L00-215	298A-8-12
29261-57L10-100	291A-7-1
29261-57L10-105	291A-7-2
29261-57L10-110	291A-7-3
29261-57L10-115	291A-7-4
29261-57L10-120	291A-7-5
29261-57L10-125	291A-7-6
29261-57L10-130	291A-7-7
29261-57L10-135	291A-7-8
29261-57L10-140	291A-7-9
29261-57L10-145	291A-7-10
29261-80J20-060	291A-8-1
29261-80J20-065	291A-8-2
29261-80J20-070	291A-8-3
29261-80J20-075	291A-8-4
29261-80J20-080	291A-8-5
29261-80J20-085	291A-8-6
29261-80J20-090	291A-8-7
29261-80J20-095	291A-8-8
29261-80J20-100	291A-8-9
29261-80J20-105	291A-8-10
29271-57L00	298A-9
29290-61M00	291A-9
29511-61M10	298A-10-2
29511-61M20	298A-10-1
29520-61M00	298A-11
29521-74C00	282A-30-2
	282B-30-2
29521-74C10	282A-30-3
	282B-30-3
29521-74C20	282A-30-4
	282B-30-4
29521-74C30	282A-30-5
	282B-30-5
29521-74C40	282A-30-6
	282B-30-6
29521-74C50	282A-30-7
	282B-30-7
29521-74C60	282A-30-8
	282B-30-8
29521-74C70	282A-30-9
	282B-30-9
29521-74C80	282A-30-10
	282B-30-10
29521-74C90	282A-30-11
	282B-30-11
29521-75C10	282A-30-12
	282B-30-12
29521-75C20	282A-30-13
	282B-30-13

PART NO.	FIG.NO.-REF.NO.
29521-75C30	282A-30-14
	282B-30-14
29521-75C40	282A-30-15
	282B-30-15
29521-75C50	282A-30-16
	282B-30-16
29521-75C60	282A-30-17
	282B-30-17
29521-75C70	282A-30-18
	282B-30-18
29521-75C80	282A-30-19
	282B-30-19
29531-54P10	298A-29
29541-79JA0-100	272A-14-1
	272B-13-1
	272C-14-1
	272D-13-1
29541-79JA0-104	272A-14-2
	272B-13-2
	272C-14-2
	272D-13-2
29541-79JA0-108	272A-14-3
	272B-13-3
	272C-14-3
	272D-13-3
29541-79JA0-112	272A-14-4
	272B-13-4
	272C-14-4
	272D-13-4
29541-79JA0-116	272A-14-5
	272B-13-5
	272C-14-5
	272D-13-5
29541-79JA0-120	272A-14-6
	272B-13-6
	272C-14-6
	272D-13-6
29541-79JA0-124	272A-14-7
	272B-13-7
	272C-14-7
	272D-13-7
29541-79JA0-128	272A-14-8
	272B-13-8
	272C-14-8
	272D-13-8
29541-79JA0-132	272A-14-9
	272B-13-9
	272C-14-9
	272D-13-9
29541-79JA0-136	272A-14-10

PART NO.	FIG.NO.-REF.NO.
	272B-13-10
	272C-14-10
	272D-13-10
29541-79JA0-140	272A-14-11
	272B-13-11
	272C-14-11
	272D-13-11
29541-79JA0-144	272A-14-12
	272B-13-12
	272C-14-12
	272D-13-12
29541-79JA0-148	272A-14-13
	272B-13-13
	272C-14-13
	272D-13-13
29541-79JA0-152	272A-14-14
	272B-13-14
	272C-14-14
	272D-13-14
29541-79JA0-156	272A-14-15
	272B-13-15
	272C-14-15
	272D-13-15
29541-79JA0-160	272A-14-16
	272B-13-16
	272C-14-16
	272D-13-16
29541-79JA0-164	272A-14-17
	272B-13-17
	272C-14-17
	272D-13-17
29541-79JA0-168	272A-14-18
	272B-13-18
	272C-14-18
	272D-13-18
29610-57L00	298A-12
29610-61M01	286A-1
29613-57L00	298A-13
29615-57L00	298A-16
29620-57L00	298A-17
29620-61M10	286A-3
29622-57L00	298A-18
29651-61M31	286A-6
29670-61M10	291A-24
29726-57B00	240A-13
29738-57B00	240A-15
	240A-36
	240A-38
29849-57BT0	240A-35
	240A-37

PART NO.	FIG.NO.-REF.NO.
29970-57B00	240A-39
	240A-40
29971-57B00	226A-11
	226B-11
29982-57B00	244A-6
29985-57B00	246A-14
30000	
31100-61MA0	300A-1
	302A-1
31100-74S00	302B-1
31110-61MA0	302A-2
31110-77R00	302B-2
31150-61MA0	302A-3
31150-73S00	302B-3
31170-61MA0	302A-4
31171-60R00	304A-2-2
31171-60R10	304A-2-1
31172-64B60	302B-4
31173-61MA0	302A-5
31173-73S00	302B-5
31174-61MA0	302A-6
31175-61MA0	302A-7
31175-79030	302B-6
31190-61MA0	302A-8
31191-63J00	302B-7
31220-61MA0	302A-9
31220-73S00	302B-8
31221-61MA0	302A-10
31261-51K20	302B-9
31311-61MA0	302A-11
31311-77M01	302B-10
31314-86030	302B-11
31320-73S00	302B-12
31340-61MA0	302A-12
31341-63J00	302B-13
31343-63J00	302B-14
31344-63J00	302B-15
31400-60R01	300A-4-2
	304A-1-2
31400-60R10	300A-4-1
	304A-1-1
31401-60R00	304A-3-2

PART NO.	FIG.NO.-REF.NO.
31401-61M00	304A-3-1
31514-67J00	304A-4
31516-85250	304A-5
31580-60R10	304A-6
31585-82111	304A-7
31586-73J00	304A-8
31587-72M00	304A-9
31614-61M00	304A-10
31656-61J20	304A-11
31692-72M00	304A-12
31710-61M00	304A-13
31775-86510	304A-14
32810-74P00	320A-3
	320B-3
	320C-3
	320D-3
33220-64L20	300B-6
33220-68M00	300A-11
33220-86P00	300A-12
	300B-7
	300B-8
33400-60R00	300A-15-1
	300A-15-2
33400-74S00	300B-11
33570-71M00	351A-19
	351B-19
	351D-19
	351E-19
	351G-19
	351H-19
33571-54P00	351A-20
	351B-20
	351G-20
33571-54P10	351D-20
	351E-20
	351H-20
33580-57T00	351C-41
	351F-42
33580-86R01	351A-49
	351B-48
	351D-50
	351E-49
	351G-48
	351H-49
33610-61MC0	320A-1
	320B-1
	320D-1
33610-83E51	320C-1-1
33610-83E61	320C-1-2
33680-53S00	351A-17-1

PART NO.	FIG.NO.-REF.NO.
	351B-17-1
	351D-17-1
	351E-17-1
	351G-17-1
	351H-17-1
33680-53SB0	351A-17-2
	351B-17-2
	351D-17-2
	351E-17-2
	351G-17-2
	351H-17-2
33801-54P00	320D-9
33801-61M00	320A-9
33850-54PB0	320D-4
33850-60R00	320B-4
	320C-4
33850-61M10	320A-4
33880-64R00	320A-2
33880-64R20	320B-2
	320C-2
33880-64R30	320D-2
33886-68L00	320A-5
	320B-5
	320C-5
	320D-5
33887-71L00	320A-6
	320B-6
	320C-6
	320D-6
33910-53S00	300A-17-1
	300A-17-3
33910-60R00	300A-17-2
33910-74S00	300B-19
33924-86P00	300A-19
	300B-21
33941-53S01	350C-42-1
	350F-42-1
33941-53S11	350C-42-2
	350F-42-2
33941-86R01	350A-41-1
	350D-41-1
33941-86R11	350A-41-2
	350D-41-2
33941-86R21	350A-41-3
	350D-41-3
33941-86R31	350A-41-4
	350D-41-4
33941-86R41	350B-41-1
	350E-41-1
	350G-41-1

PART NO.	FIG.NO.-REF.NO.
	350H-41-1
33941-86R51	350B-41-2
	350E-41-2
	350G-41-2
	350H-41-2
33941-86R61	350B-41-3
	350E-41-3
	350G-41-3
	350H-41-3
33941-86R71	350B-41-4
	350E-41-4
	350G-41-4
	350H-41-4
33942-86R00	350A-42
	350B-42
	350C-43
	350D-42
	350E-42
	350F-43
	350G-42
	350H-42
33949-73P00	350A-43
	350B-43
	350C-44
	350D-43
	350E-43
	350F-44
	350G-43
	350H-43
33970-54P01	360A-8
	360B-8
33975-61M01	351D-45
	351E-44
	351F-37
	351H-44
33990-86R01	350A-53-1
	350B-53-1
	350C-54
	350G-53-1
33990-86R11	350A-53-2
	350B-53-2
	350G-53-2
33990-86R21	350D-53-1
	350E-53-1
	350F-54
	350H-53-1
33990-86R31	350D-53-2
	350E-53-2
	350H-53-2
34100-53SA0	324B-1-2

PART NO.	FIG.NO.-REF.NO.
34100-53SB0	324B-1-1
34100-53SC0	324B-1-3
34100-53SE0	324B-1-5
34100-53SF0	324B-1-4
34100-53SG0	324B-1-6
34100-53SJ0	324E-1-3
34100-53SK0	324E-1-1
34100-53SL0	324E-1-5
34100-53SN0	324E-1-9
34100-53SP0	324E-1-7
34100-53SQ0	324E-1-11
34100-53SS0	324E-1-4
34100-53SU0	324E-1-2
34101-53SA0	324E-1-6
34101-53SC0	324E-1-10
34101-53SD0	324E-1-8
34101-53SE0	324E-1-12
34107-53SA0	324C-1-2
34107-53SB0	324C-1-1
34107-53SC0	324C-1-3
34107-53SJ0	324F-1-3
34107-53SK0	324F-1-1
34107-53SL0	324F-1-5
34107-53SS0	324F-1-4
34107-53SU0	324F-1-2
34108-53SA0	324F-1-6
34112-54P00	324A-2
	324B-2
	324C-2
	324D-2
	324E-2
	324F-2
34200-53SA0	324A-1-3
	324B-1-8
34200-53SB0	324A-1-2
	324B-1-7
34200-53SC0	324A-1-5
	324A-1-6
	324B-1-9
34200-53SE0	324A-1-8
	324B-1-11
34200-53SF0	324A-1-7
	324B-1-10
34200-53SG0	324A-1-9
	324B-1-12
34200-53SJ0	324D-1-5
	324E-1-15
34200-53SK0	324D-1-3
	324E-1-13
34200-53SL0	324D-1-7

PART NO.	FIG.NO.-REF.NO.
	324E-1-17
34200-53SN0	324D-1-11
	324E-1-21
34200-53SP0	324D-1-9
	324E-1-19
34200-53SQ0	324D-1-13
	324E-1-23
34200-53SS0	324D-1-6
	324E-1-16
34200-53SU0	324D-1-4
	324E-1-14
34200-60R10	324A-1-1
34200-60R30	324A-1-4
34200-60R90	324D-1-1
34200-60RH0	324D-1-2
34201-53SA0	324D-1-8
	324E-1-18
34201-53SC0	324D-1-12
	324E-1-22
34201-53SD0	324D-1-10
	324E-1-20
34201-53SE0	324D-1-14
	324E-1-24
34600-53S00	351A-46
	351B-45
	351C-38
	351D-47
	351E-46
	351F-39
	351G-45
	351H-46
34615-54P00-PEQ	351A-47
	351B-46
	351C-39
	351D-48
	351E-47
	351F-40
	351G-46
	351H-47
34630-54P00-5PK	351A-48-1
	351C-40-1
	351D-49-1
	351F-41-1
34630-54P00-AQS	351A-48-2
	351B-47
	351C-40-2
	351D-49-2
	351E-48
	351F-41-2
	351G-47

PART NO.	FIG.NO.-REF.NO.
	351H-48
34955-61M00	392A-10
	392B-8
	392C-9
35118-68K00	330A-2
	330A-10
	330B-2
	330B-9
35120-54P00	330A-1-1
35120-54P10	330A-1-2
35120-54P50	330B-1-1
35120-54P60	330B-1-2
35120-74S00	330C-1-1
35120-74S10	330C-1-2
35153-54G00	336A-9
35153-63G00	336A-10
35153-65J00	336A-5
35179-76F10	330A-3
	330A-11
	330B-3
	330B-10
35180-51KB0	351A-31
	351B-30
	351D-31
	351E-30
	351G-30
	351H-30
35181-71L00	330A-17
	330B-15
	330C-7
35320-54P00	330A-9-1
35320-54P10	330A-9-2
35320-54P50	330B-8-1
35320-54P60	330B-8-2
35320-74S00	330C-4-1
35320-74S10	330C-4-2
35500-62J01	332B-1
35526-86R10	332A-3
	332B-3
35526-86R20	332A-4
	332B-4
35566-86R00	332A-5
	332B-6
35650-86R00	336A-1
35670-86R00	336A-3
35701-86R00	336A-7
35702-86R00	336A-8
35810-71LA1	336A-12
35910-62R00	336A-23
35910-75F31	336A-14

PART NO.	FIG.NO.-REF.NO.
35950-79J02	336A-17
35970-79J02	336A-16
36118-77A00	330A-4
	330A-12
	330B-4
	330B-11
	330C-2
	330C-5
36210-60P01-6GS	338A-1
	338B-1
	338C-1
36210-61M00-6GS	338D-1
36210-79J00	338B-4
	338C-4
	338D-3
36212-60P00	338A-2
	338B-2
	338C-2
36212-68L00	338A-6
	338B-7
	338C-7
36212-68L10	338A-7
	338B-8
	338C-8
36216-54G00-5PK	338A-4
	338C-16
36218-68L00	338A-8
	338B-9
	338C-9
36230-54P10-6GS	338A-5-2
	338B-6-2
	338C-6-2
36230-54P20-6GS	338A-5-3
	338B-6-3
	338C-6-3
36230-61M30-6GS	338D-5-1
36230-61M51-6GS	338D-5-2
36230-61M61-6GS	338D-5-3
36230-68L00-6GS	338A-5-1
	338B-6-1
	338C-6-1
36254-86R00	336A-19-1
36254-86R10	336A-19-2
36258-86R00	336A-20-1
36258-86R10	336A-20-2
36410-51K00	330A-19
	330C-9
36410-61M00	835G-2
36430-61M00	835G-7
36550-57L30	338B-14

PART NO.	FIG.NO.-REF.NO.
	338C-14
36550-60E00	338B-12
	338C-12
	338D-10
36580-54P00	332A-1
36583-54P00	332B-5
36584-54P00	332B-7
36601-74S00	34NC-1-3
36601-74S10	34NC-1-1
36601-74S20	34NC-1-2
36601-86R00	34NA-1-5
	34NB-1-3
	34NG-1-3
36601-86R10	34NA-1-8
	34NB-1-6
	34NG-1-6
36601-86R20	34NA-1-1
36601-86R30	34NA-1-2
	34NB-1-1
	34NG-1-1
36601-86R40	34NA-1-3
36601-86R50	34NA-1-4
	34NB-1-2
	34NG-1-2
36601-86R60	34NA-1-6
	34NB-1-4
	34NG-1-4
36601-86R70	34NA-1-7
	34NB-1-5
	34NG-1-5
36602-74S00	34PC-1-1
36602-74S10	34PC-1-4
36602-74S20	34PC-1-5
36602-74S30	34PC-1-6
36602-74S40	34PC-1-2
36602-74S50	34PC-1-3
36602-86R00	34PA-1-1
36602-86R10	34PA-1-2
	34PB-1-1
	34PG-1-1
36602-86R20	34PA-1-3
	34PB-1-2
	34PG-1-2
36602-86R30	34PA-1-5
	34PB-1-3
	34PG-1-3
36602-86R40	34PA-1-4
36602-86R50	34PA-1-6
	34PB-1-4

PART NO.	FIG.NO.-REF.NO.
	34PG-1-4
36603-74S00	34PC-4-1
36603-74S10	34PC-4-2
36603-74S20	34PC-4-7
36603-74S30	34PC-4-8
36603-74S40	34PC-4-9
36603-74S50	34PC-4-10
36603-74S60	34PC-4-11
36603-74S70	34PC-4-12
36603-74S80	34PC-4-3
36603-74S90	34PC-4-4
36603-74SA0	34PC-4-5
36603-74SB0	34PC-4-6
36603-86R00	34PA-4-1
36603-86R10	34PA-4-3
36603-86R20	34PA-4-2
	34PB-4-1
	34PG-4-1
36603-86R30	34PA-4-4
	34PB-4-2
	34PG-4-2
36603-86R40	34PA-4-5
	34PB-4-3
	34PG-4-3
36603-86R50	34PA-4-6
	34PB-4-4
	34PG-4-4
36603-86R60	34PA-4-7
36603-86R70	34PA-4-9
36603-86R80	34PA-4-8
	34PB-4-5
	34PG-4-5
36603-86R90	34PA-4-10
	34PB-4-6
	34PG-4-6
36603-86RA0	34PA-4-11
	34PB-4-7
	34PG-4-7
36603-86RB0	34PA-4-12
	34PB-4-8
	34PG-4-8
36605-86R00	34NG-26-1
	34NH-26-1
36605-86R10	34NG-26-3
	34NH-26-3
36605-86R20	34NG-26-2
	34NH-26-2
36605-86R30	34NG-26-4
	34NH-26-4
36610-74S00	34NF-1-3

PART NO.	FIG.NO.-REF.NO.
36610-74S10	34NF-1-1
36610-74S20	34NF-1-2
36610-86R00	34ND-1-4
	34NE-1-3
	34NH-1-3
36610-86R10	34ND-1-7
	34NE-1-6
	34NH-1-6
36610-86R20	34ND-1-1
36610-86R30	34ND-1-2
	34NE-1-1
	34NH-1-1
36610-86R50	34ND-1-3
	34NE-1-2
	34NH-1-2
36610-86R60	34ND-1-5
	34NE-1-4
	34NH-1-4
36610-86R70	34ND-1-6
	34NE-1-5
	34NH-1-5
36620-74S00	34PF-1-1
36620-74S10	34PF-1-4
36620-74S20	34PF-1-5
36620-74S30	34PF-1-6
36620-74S40	34PF-1-2
36620-74S50	34PF-1-3
36620-86R00	34PD-1-1
36620-86R10	34PD-1-2
	34PE-1-1
	34PH-1-1
36620-86R20	34PD-1-3
	34PE-1-2
	34PH-1-2
36620-86R30	34PD-1-4
	34PE-1-3
	34PH-1-3
36620-86R50	34PD-1-5
	34PE-1-4
	34PH-1-4
36630-74S00	34PF-4-1
36630-74S10	34PF-4-4
36630-74S20	34PF-4-5
36630-74S30	34PF-4-6
36630-74S40	34PF-4-2
36630-74S50	34PF-4-3
36630-86R00	34PD-4-1
36630-86R20	34PD-4-2
	34PE-4-1
	34PH-4-1

PART NO.	FIG.NO.-REF.NO.
36630-86R40	34PD-4-3
	34PE-4-2
	34PH-4-2
36630-86R80	34PD-4-4
	34PE-4-3
	34PH-4-3
36630-86RA0	34PD-4-5
	34PE-4-4
	34PH-4-4
36650-60R00	34NB-26-1
	34NE-26-1
36650-60R10	34NB-26-3
	34NE-26-3
36650-60R20	34NB-26-2
	34NE-26-2
36650-60R30	34NB-26-4
	34NE-26-4
36650-74S00	34NC-25-1
	34NF-25-1
36650-74S10	34NC-25-2
	34NF-25-2
36650-86R00	34NA-26-1
	34ND-26-1
36650-86R10	34NA-26-2
	34ND-26-2
36650-86RA0	34NA-26-3
	34ND-26-3
36650-86RB0	34NA-26-4
	34ND-26-4
36651-60R10	320B-9
	320C-9
	348D-3
	348E-7
36651-61MB0	348A-3
36651-64RA0	348A-8
36651-68M00	348B-1
	348E-1
36651-68M10	348B-5
	348E-5
36651-68M20	348B-4
	348E-4
36651-68P90	348D-5
	348E-9
36651-85L10	208B-41
36653-54P00	320D-11
	348B-7
36653-54PA0	348D-1
	348E-11
36653-61M00	320A-7
	320B-7

PART NO.	FIG.NO.-REF.NO.
	320C-7
	320D-7
36653-64R60	348A-12
	348D-12
36653-68P40	348A-6
	348D-8
36653-68P70	348A-10
	348D-10
36653-74S00	348C-4
36653-74S10	348C-6
36653-74S20	320C-27
36653-74S30	348C-8
36653-74S40	320C-29
36653-74S50	320C-31
36654-51K20	348A-1
36680-74S20	34PF-15-1
36680-74S30	34PF-15-2
36680-74SC0	34PC-15-1
36680-74SD0	34PC-15-2
36680-86R20	34PD-15-1
	34PE-15-1
	34PH-15-1
36680-86R30	34PD-15-2
	34PE-15-2
	34PH-15-2
36680-86RC0	34PA-15-1
	34PB-15-1
	34PG-15-1
36680-86RD0	34PA-15-2
	34PB-15-2
	34PG-15-2
36691-61M10	34NA-37
	34NB-37
	34NC-36
	34ND-37
	34NE-37
	34NF-36
	34NG-37
	34NH-37
36694-66M00	320A-12
	320B-13
	320C-21
	320D-15
	34NA-28
	34NB-28
	34ND-28
	34NE-28
	34NG-28
	34NH-28
36696-68L00	34PA-30

PART NO.	FIG.NO.-REF.NO.
	34PD-30
36710-61M00	34PA-5-1
	34PB-5-1
	34PC-5-1
	34PD-5-1
	34PE-5-1
	34PF-5-1
	34PG-5-1
	34PH-5-1
36710-61M10	34PA-5-2
	34PB-5-2
	34PC-5-2
	34PD-5-2
	34PE-5-2
	34PF-5-2
	34PG-5-2
	34PH-5-2
36717-54P00	34NA-21-1
	34NB-21-1
	34ND-21-1
	34NE-21-1
36717-61MP0	34PA-6
	34PB-6
	34PC-6
	34PD-6
	34PE-6
	34PF-6
	34PG-6
	34PH-6
36717-74S00	34NA-21-2
	34NB-21-2
	34NC-20
	34ND-21-2
	34NE-21-2
	34NF-20
	34NG-21
	34NH-21
36739-61M00	320A-13
	320B-14
	320D-16
	34NA-27
	34NB-27
	34ND-27
	34NE-27
	34NG-27
	34NH-27
36739-74S00	320C-24
36744-74S00	320C-13
36751-54P00	34NA-32-1
	34NC-29-1

PART NO.	FIG.NO.-REF.NO.
36751-54P10	34NA-32-2
	34NA-32-3
	34NA-32-4
	34NB-32
	34NC-29-2
	34NG-32
36751-54P20	34ND-32-1
	34NF-29-1
36751-54P30	34ND-32-2
	34ND-32-3
	34ND-32-4
	34NE-32
	34NF-29-2
	34NH-32
36751-54PA0	34NA-33-1
	34NC-30-1
36751-54PB0	34NA-33-2
	34NA-33-3
	34NA-33-4
	34NB-33
	34NC-30-2
	34NG-33
36751-54PC0	34ND-33-1
	34NF-30-1
36751-54PD0	34ND-33-2
	34ND-33-3
	34ND-33-4
	34NE-33
	34NF-30-2
	34NH-33
36756-54P00	34NA-34-1
	34NB-34-1
	34NC-31-1
	34NG-34-1
36756-54PA0	34ND-34-1
	34NE-34-1
	34NF-31-1
	34NH-34-1
36756-86R00	34NA-34-2
	34NB-34-2
	34NC-31-2
	34NG-34-2
36756-86R10	34NA-34-3
	34NB-34-3
	34NC-31-3
	34NG-34-3
36756-86RA0	34ND-34-2
	34NE-34-2
	34NF-31-2
	34NH-34-2

PART NO.	FIG.NO.-REF.NO.
36756-86RB0	34ND-34-3
	34NE-34-3
	34NF-31-3
	34NH-34-3
36757-54P00	34NA-35-1
	34NB-35-1
	34NC-32-1
	34NG-35-1
36757-54PA0	34ND-35-1
	34NE-35-1
	34NF-32-1
	34NH-35-1
36757-86R00	34NA-35-2
	34NB-35-2
	34NC-32-2
	34NG-35-2
36757-86R10	34NA-35-3
	34NB-35-3
	34NC-32-3
	34NG-35-3
36757-86RA0	34ND-35-2
	34NE-35-2
	34NF-32-2
	34NH-35-2
36757-86RB0	34ND-35-3
	34NE-35-3
	34NF-32-3
	34NH-35-3
36770-86R00	351A-44-1
	351C-36-1
36770-86R10	351A-44-2
	351B-43
	351C-36-2
	351G-43
36770-86R20	351D-43-1
	351F-35-1
36770-86R30	351D-43-2
	351E-42
	351F-35-2
	351H-42
36771-79M01	350A-54
	350B-54
	350C-55
	350D-54
	350E-54
	350F-55
	350G-54
	350H-54
36772-61M00	351A-12
	351B-12

PART NO.	FIG.NO.-REF.NO.	PART NO.	FIG.NO.-REF.NO.	PART NO.	FIG.NO.-REF.NO.
	351C-12	36820-86R00	34NA-30-6		350E-56
	351D-12		34NB-30-3		350F-57
	351E-12		34NG-30-3		350G-56
	351F-12	36820-86R10	34NA-30-8		350H-56
	351G-12		34NB-30-4	36895-64R00	34NA-39
	351H-12		34NG-30-4		34ND-39
36810-74S00	320C-14	36820-86R20	34ND-30-4	36895-74S10	34NC-35
36813-54P00	34PA-28		34NE-30-2		34NF-35
	34PB-28		34NH-30-2	36930-82010	34NC-34
	34PC-28	36820-86R30	34NA-30-9		34NF-34
	34PD-28		34NB-30-5		34PA-29
	34PE-28		34NC-27-2		34PB-29
	34PF-28		34NG-30-5		34PD-29
	34PG-28	36820-86R40	34NA-30-10		34PE-29
	34PH-28		34NB-30-6		34PG-29
36813-86RA0	34NA-36-1		34NC-27-3		34PH-29
	34ND-36-1		34NG-30-6		755A-1
36813-86RE0	34NA-36-2	36820-86R50	34ND-30-5		755B-1
	34NB-36-1		34NE-30-3	36970-57T00	320C-23
	34NC-33-1		34NF-27-3	36997-74S00	320C-15
	34ND-36-2		34NH-30-3	36997-74S10	320C-16
	34NE-36-1	36820-86R60	34NA-30-11		320C-22
	34NF-33-1		34NB-30-7	36998-74S00	320C-25
	34NG-36-1		34NC-27-4	37100-68L63	360C-1
	34NH-36-1		34NG-30-7	37101-68L30	360A-3
36813-86RF0	34NA-36-3	36820-86R70	34ND-30-6	37101-68L40	360B-3
	34NB-36-2		34NE-30-4	3710A-54842	360A-1-2
	34NC-33-2		34NF-27-4	3710A-54852	360A-2
	34ND-36-3		34NH-30-4	3710A-54862	360B-1-2
	34NE-36-2	36820-86R80	34NF-27-2	3710A-54872	360B-2
	34NF-33-2	36821-54P00	34NA-31	3710A-54882	360A-1-1
	34NG-36-2		34NB-31	3710A-54892	360B-1-1
	34NH-36-2		34NC-28	37111-62JA0	360A-4
36820-54P00	34NA-30-1		34ND-31		360B-4
	34NA-30-5		34NE-31	37145-54P02	360A-9
	34ND-30-1		34NF-28		360B-9
36820-54P10	34NA-30-3		34NG-31	37145-68L50	360C-6
	34NA-30-7		34NH-31	37152-68L00	360A-5
	34ND-30-2	36840-61M00	34PA-17		360B-5
36820-54P30	34NC-27-1		34PB-17		360C-2
36820-54P40	34NF-27-1		34PC-17	37160-61M11	351A-11
36820-54PA0	34NA-30-2		34PD-17		351B-11
	34NB-30-1		34PE-17		351C-11
	34NG-30-1		34PF-17		351D-11
36820-54PB0	34NA-30-4		34PG-17		351E-11
	34NB-30-2		34PH-17		351F-11
	34ND-30-3	36882-61M00	350A-56		351G-11
	34NE-30-1		350B-56		351H-11
	34NG-30-2		350C-57	37171-86R01	351A-14-1
	34NH-30-1		350D-56		351B-14-1

PART NO.	FIG.NO.-REF.NO.	PART NO.	FIG.NO.-REF.NO.	PART NO.	FIG.NO.-REF.NO.
	351C-14-1		350D-2-2		351F-27
	351G-14-1		350E-2-2		351G-31
37171-86R10	351D-14-1		350F-2-2		351G-34
	351E-14-1		350G-2-2		351H-31
	351F-14-1		350H-2-2		351H-34
	351H-14-1	37182-54P01	360A-10	37290-54P01	360C-3
37171-86RE0	351A-14-2		360B-10	37310-68L10	351A-2-1
	351B-14-2	37185-54G10	360A-11		351B-2-1
	351C-14-2		360B-11		351D-2-1
	351D-14-2	37186-81A00	360A-12		351E-2-1
	351E-14-2		360B-12		351G-2-1
	351F-14-2	37210-61M50	351A-1-2		351H-2-1
	351G-14-2		351B-1-2	37310-68L20	351A-2-2
	351H-14-2		351C-1		351B-2-2
37172-54P02	360C-7		351D-1-2		351C-2
37175-54P00	351A-16		351E-1-2		351D-2-2
	351B-16		351F-1		351E-2-2
	351C-16		351G-1-2		351F-2
	351D-16		351H-1-2		351G-2-2
	351E-16	37210-61M60	351A-1-1		351H-2-2
	351F-16		351B-1-1	37320-61M10	350A-24
	351G-16		351D-1-1		350B-24
	351H-16		351E-1-1		350C-24
37175-54P10	350A-17		351G-1-1		350D-24
	350B-17		351H-1-1		350E-24
	350C-17	37270-68L00	351A-29		350F-24
	350D-17		351B-29		350G-24
	350E-17		351C-23		350H-24
	350F-17		351D-29	37324-57L00	350A-25
	350G-17		351E-29		350B-25
	350H-17		351F-23		350C-25
37175-54P20	350A-18		351G-29		350D-25
	350B-18		351H-29		350E-25
	350C-18	37275-65H00	392A-16		350F-25
	350D-18		392A-17		350G-25
	350E-18		392B-18		350H-25
	350F-18		392C-21	37325-54P00	350A-26
	350G-18	37285-62JA0	351A-30		350B-26
	350H-18		351A-32		350C-26
37178-61M00	350A-2-1		351A-35		350D-26
	350B-2-1		351B-31		350E-26
	350C-2-1		351B-34		350F-26
	350D-2-1		351C-24		350G-26
	350E-2-1		351C-27		350H-26
	350F-2-1		351D-30	37430-54P10-5PK	351A-5
	350G-2-1		351D-32		351B-5
	350H-2-1		351D-35		351C-5
37179-61M00	350A-2-2		351E-31		351D-5
	350B-2-2		351E-34		351E-5
	350C-2-2		351F-24		351F-5

PART NO.	FIG.NO.-REF.NO.	PART NO.	FIG.NO.-REF.NO.	PART NO.	FIG.NO.-REF.NO.
	351G-5		351D-34		350G-28
	351H-5		351E-33		350H-28
37440-68L10	351A-4		351F-26	37737-54P00	350A-30
	351B-4		351G-33		350B-30
	351C-4		351H-33		350C-30
	351D-4	37690-57L00	338B-15		350D-30
	351E-4		338C-15		350E-30
	351F-4		338D-13		350F-30
	351G-4	37710-71M00	208B-42-1		350G-30
	351H-4	37710-71M01	208B-42-2		350H-30
37480-64J70	351A-3-2		208B-42-3	37740-62R00	351A-7-1
	351B-3		300B-13		351B-7-1
	351C-3	37730-54P50	350A-31		351C-7-1
	351D-3-2		350B-31		351D-7-1
	351E-3		350C-31		351E-7-1
	351F-3		350D-31		351F-7-1
	351G-3		350E-31		351G-7-1
	351H-3		350F-31		351H-7-1
37480-68L10	351A-3-1		350G-31	37740-62R10	351A-7-2
	351D-3-1		350H-31		351A-7-3
37585-61M90	351A-36-2	37734-54P00	351A-38		351B-7-2
	351B-35-2		351B-37		351B-7-3
	351C-28-2		351C-30		351C-7-2
	351D-36-2		351D-37		351D-7-2
	351E-35-2		351E-36		351D-7-3
	351F-28-2		351F-29		351E-7-2
	351G-35-2		351G-37		351E-7-3
	351H-35-2		351H-36		351F-7-2
37585-68L00	351A-36-1	37735-54P01	350A-27		351G-7-2
	351B-35-1		350A-29		351G-7-3
	351C-28-1		350B-27		351H-7-2
	351D-36-1		350B-29		351H-7-3
	351E-35-1		350C-27	37742-75H10	351A-8
	351F-28-1		350C-29		351B-8
	351G-35-1		350D-27		351C-8
	351H-35-1		350D-29		351D-8
37610-76G10	206A-27		350E-27		351E-8
	206B-23		350E-29		351F-8
	300B-14		350F-27		351G-8
37670-61M00	350A-1		350F-29		351H-8
	350B-1		350G-27	37780-54P90	351A-33-2
	350C-1		350G-29		351B-32-2
	350D-1		350H-27		351C-25-2
	350E-1		350H-29		351D-33-2
	350F-1	37735-54P11	350A-28		351E-32-2
	350G-1		350B-28		351F-25-2
	350H-1		350C-28		351G-32-2
37690-53S00	351A-34		350D-28		351H-32-2
	351B-33		350E-28	37780-61M00	351A-33-1
	351C-26		350F-28		351B-32-1

PART NO.	FIG.NO.-REF.NO.	PART NO.	FIG.NO.-REF.NO.	PART NO.	FIG.NO.-REF.NO.
	351C-25-1		351E-25		370B-10
	351D-33-1		351F-19	38346-63J00	376A-6
	351E-32-1		351G-25	38402-54P00	374A-4
	351F-25-1		351H-25	38402-74S00	374B-4
	351G-32-1	37990-54P01	350A-4-1	38410-71L10	374A-1
	351H-32-1	37990-54P02	350C-4-1		374B-1
37790-61M00	351A-27	37990-54P11	350D-4-1	38450-61M10	374A-3
	351B-27	37990-54P12	350F-4-1		374B-3
	351C-21	37990-54P21	350A-4-2	38452-54P00	374A-5
	351D-27		350B-4	38452-74S00	374B-5
	351E-27		350G-4	38453-54P00	374A-6
	351F-21	37990-54P22	350C-4-2	38453-61L00	374A-2
	351G-27	37990-54P31	350D-4-2		374B-2
	351H-27		350E-4	38453-74S00	374B-6
37820-73HP0	111A-25		350H-4	38459-54P00	374A-8
	176B-20	37990-54P32	350F-4-2		374B-8
37850-61M00	351A-37	37995-68L00	350A-6	38480-54P00	374A-10-1
	351B-36		350B-6		374B-10-1
	351C-29		350C-6-1	38480-54P10	374A-11-1
	351G-36		350C-6-2		374B-11-1
37880-61M00-6GS	338D-8		350D-6	38480-54P20	374A-11-2
37940-76G00	542A-2		350E-6		374B-11-2
37950-57L00	350A-8-1		350F-6-1	38480-54P30	374A-10-2
	350B-8-1		350F-6-2		374B-10-2
	350C-8-1		350G-6	38496-61M00	374A-9-1
	350D-8-1		350H-6		374A-9-2
	350E-8-1	38100-54P00	370A-1		374B-9-1
	350F-8-1	38100-54P10	370B-1		374B-9-2
	350G-8-1	38116-73H00	370A-2	38500-63J01	350A-37
	350H-8-1		370B-2		350B-37
37950-57L10	350A-8-2	38274-54P00	376A-2		350D-37
	350B-8-2	38310-54P00	370A-5		350E-37
	350C-8-2	38310-54P10	370B-5		350G-37
	350D-8-2	38315-54G00	376A-4		350H-37
	350E-8-2	38315-60B11	350A-38	38500-74S00	350C-37
	350F-8-2		350B-38		350F-37
	350G-8-2		350D-38	38560-74S00	350C-39
	350H-8-2		350E-38		350F-39
37970-64J00	351A-23		350G-38	38590-82K01	350A-19
	351B-23		350H-38		350B-19
	351C-17	38330-54P00	370A-8		350C-19
	351D-23	38330-54P10	370B-8		350D-19
	351E-23	38340-54P00	370A-6		350E-19
	351F-17	38340-54P10	370B-6		350F-19
	351G-23	38340-54P30	370A-9		350G-19
	351H-23	38340-54P40	370B-9		350H-19
37970-68J00	351A-25	38340-63J00	376A-5	38620-54P01	351A-42
	351B-25	38346-54P00	370A-7		351B-41
	351C-19		370B-7		351D-41
	351D-25	38346-54P10	370A-10		351E-40

PART NO.	FIG.NO.-REF.NO.	PART NO.	FIG.NO.-REF.NO.	PART NO.	FIG.NO.-REF.NO.
	351G-41		34NB-11		34NH-20
	351H-40		34NB-13		34PA-18
38620-54P10	351C-34		34NB-15		34PA-19
	351F-33		34NB-17		34PA-20
38640-80J10	350A-55		34NB-18		34PA-21
	350B-55		34NB-19		34PA-22
	350C-56		34NB-20		34PA-23
	350D-55		34NC-11		34PA-25
	350E-55		34NC-13		34PA-26
	350F-56		34NC-16		34PA-27
	350G-55		34NC-17		34PB-18
	350H-55		34NC-18		34PB-19
38810-54P00	376A-1		34NC-19		34PB-20
38821-54G10	376A-3		34ND-10		34PB-21
38832-54P00	374A-12-1		34ND-11		34PB-22
	374B-12-1		34ND-13		34PB-23
38832-54P10	374A-13-1		34ND-15		34PB-25
	374B-13-1		34ND-17		34PB-26
38832-54P20	374A-13-2		34ND-18		34PB-27
	374B-13-2		34ND-19		34PC-18
38832-54P30	374A-12-2		34ND-20		34PC-19
	374B-12-2		34NE-10		34PC-20
38834-54P00	376A-8		34NE-11		34PC-21
38835-54P00	376A-9		34NE-13		34PC-22
38840-62J00	376A-10		34NE-15		34PC-23
38860-55P00	34NA-16		34NE-17		34PC-25
	34NB-16		34NE-18		34PC-26
	34NC-15		34NE-19		34PC-27
	34ND-16		34NE-20		34PD-18
	34NE-16		34NF-11		34PD-19
	34NF-15		34NF-13		34PD-20
	34NG-16		34NF-16		34PD-21
	34NH-16		34NF-17		34PD-22
38860-57L00	34PA-24		34NF-18		34PD-23
	34PB-24		34NF-19		34PD-25
	34PC-24		34NG-10		34PD-26
	34PD-24		34NG-11		34PD-27
	34PE-24		34NG-13		34PE-18
	34PF-24		34NG-15		34PE-19
	34PG-24		34NG-17		34PE-20
	34PH-24		34NG-18		34PE-21
38860-76F01	34NA-10		34NG-19		34PE-22
	34NA-11		34NG-20		34PE-23
	34NA-13		34NH-10		34PE-25
	34NA-15		34NH-11		34PE-26
	34NA-17		34NH-13		34PE-27
	34NA-18		34NH-15		34PF-18
	34NA-19		34NH-17		34PF-19
	34NA-20		34NH-18		34PF-20
	34NB-10		34NH-19		34PF-21

PART NO.	FIG.NO.-REF.NO.	PART NO.	FIG.NO.-REF.NO.	PART NO.	FIG.NO.-REF.NO.
	34PF-22		350H-21	39103-62MA1	392C-3-1
	34PF-23	38885-86R20	350C-21	39103-62MB1	392C-3-2
	34PF-25		350F-21	39103-62MC1	392C-3-3
	34PF-26	38910-86R00	351A-9	39103-62MD1	392C-3-4
	34PF-27		351B-9	39103-62ME1	392C-3-5
	34PG-18		351C-9	39103-62MF1	392C-3-6
	34PG-19		351D-9	39103-62MG1	392C-3-7
	34PG-20		351E-9	39103-62MH1	392C-3-8
	34PG-21		351F-9	39103-62MJ1	392C-3-9
	34PG-22		351G-9	39103-62MK1	392C-3-10
	34PG-23		351H-9	39103-62ML1	392C-3-11
	34PG-25	38930-61M00	350A-9	39103-62MM1	392C-3-12
	34PG-26		350B-9	39103-62MN1	392C-3-13
	34PG-27		350C-9	39103-62MP1	392C-3-14
	34PH-18		350D-9	39105-54P00	392B-14
	34PH-19		350E-9		392C-17
	34PH-20		350F-9	39106-54P00	392B-15
	34PH-21		350G-9		392C-18
	34PH-22		350H-9	39161-80J00	392A-2
	34PH-23	38930-61M10	350A-11	39182-80J10	392A-3
	34PH-25		350B-11	39251-68L00	392A-11
	34PH-26		350C-11		392B-9-1
	34PH-27		350D-11		392C-12-1
	952A-12		350E-11	39251-68L10	392B-9-2
	952B-12		350F-11		392C-12-2
	952C-12		350G-11	39253-68L11	392A-12
	952D-12		350H-11		392B-10-1
	952E-7	38930-61M20	350A-14		392C-13-1
	952F-7		350B-14	39253-68L21	392B-10-2
38860-78F00	34NA-12		350C-14		392C-13-2
	34NA-14		350D-14	39270-54P00	392A-14-1
	34NB-12		350E-14		392B-12-1
	34NB-14		350F-14		392C-15-1
	34NC-12		350G-14	39270-54P10	392A-14-2
	34NC-14		350H-14		392B-12-3
	34ND-12	38970-61M00	351A-6		392C-15-3
	34ND-14		351B-6	39270-54PA0	392B-12-2
	34NE-12		351C-6		392C-15-2
	34NE-14		351D-6	39270-54PB0	392B-12-4
	34NF-12		351E-6		392C-15-4
	34NF-14		351F-6	39271-54P00	392A-13-1
	34NG-12		351G-6		392B-11-1
	34NG-14		351H-6		392C-14-1
	34NH-12	39101-54P11-BKZ	392B-1-1	39271-54P10	392A-13-2
	34NH-14	39101-54P20-BKZ	392B-1-2		392B-11-2
38885-86R00	350A-21	39102-61M00	392B-16		392C-14-2
	350D-21		392C-19	39271-54PA0	392B-11-3
38885-86R10	350B-21	39102-86R00	392A-15		392C-14-3
	350E-21		392B-13	39271-54PB0	392B-11-4
	350G-21		392C-16		392C-14-4

PART NO.	FIG.NO.-REF.NO.	PART NO.	FIG.NO.-REF.NO.	PART NO.	FIG.NO.-REF.NO.
39321-54P00	392A-4		351E-39		350B-46
	392B-3		351F-32		350C-47
	392C-4		351G-40		350D-46
39322-54P00	392A-5		351H-39		350E-46
	392B-4	39510-54P00-AQK	73AB-1		350F-47
	392C-5	39530-86R00	73AB-4-1		350G-46
39410-86G00	350A-36	39530-86R10	73AB-4-2		350H-46
	350B-36	39813-62R00	338A-10	3F501-86R10	350A-50
	350C-36		338B-11		350B-50
	350D-36		338C-11		350C-51
	350E-36		338D-7		350D-50
	350F-36	39920-54P42-DB7	392C-1-3		350E-50
	350G-36	39920-54P52-DB7	392C-1-1		350F-51
	350H-36	39920-54P62-DB7	392C-1-7		350G-50
	351A-40	39920-54P72-DB7	392C-1-5		350H-50
	351B-39	39920-54PG4-DB7	392C-1-4		
	351C-32	39920-54PH4-DB7	392C-1-2		
	351D-39	39920-54PJ4-DB7	392C-1-8	40000	
	351E-38	39920-54PK4-DB7	392C-1-6		
	351F-31	39950-54P00	392C-10		
	351G-39	39970-54P01	805A-38	41111-54P00	400A-15-1
	351H-38		805B-39	41111-54P10	400A-15-2
39411-86G00	350A-35	39977-61M00	805A-37	41111-74S00	400A-15-3
	350B-35		805B-38	41212-61M00	400A-17
	350C-35	3E110-86R10	240A-49	41230-61M00	400A-18
	350D-35	3F103-86R00	350A-40	41311-54P00	430A-4
	350E-35		350B-40	41311-54P50	430B-4
	350F-35		350C-41	41312-70L00	430A-5
	350G-35		350D-40		430B-5
	350H-35		350E-40	41341-79J00	430A-6
	351A-39		350F-41		430B-6
	351B-38		350G-40	41601-54PA0	400A-3
	351C-31		350H-40	41602-54PA0	400A-4
	351D-38	3F500-86R00	350A-45	41710-61M00	400A-5
	351E-37		350B-45	41711-61M00	400A-6
	351F-30		350C-46	41720-79J11	400A-7
	351G-38		350D-45	41724-68L01	400A-8
	351H-37		350E-45	41742-61M00	400A-9
39442-61M00	350A-34		350F-46	41800-54PA0	430A-7
	350B-34		350G-45		430B-7
	350C-34		350H-45	41931-61M01	400A-10
	350D-34	3F500-86R10	350A-49	41951-61M00	430A-8
	350E-34		350B-49		430B-8
	350F-34		350C-50	42111-61M00	400A-16
	350G-34		350D-49	42311-61M00	408A-1
	350H-34		350E-49		408B-1
39460-61M00	351A-41		350F-50	42420-77M01	408A-2
	351B-40		350G-49		408B-2
	351C-33		350H-49	42431-54P00	408A-3
	351D-40	3F501-86R00	350A-46		408B-3

PART NO.	FIG.NO.-REF.NO.	PART NO.	FIG.NO.-REF.NO.	PART NO.	FIG.NO.-REF.NO.
42441-61M00	408A-4	43223-62J40	449B-14-5	44101-64RB0	410F-1
	408B-4		449C-14-5	44102-54P51	410A-12
42441-74S00	408B-5	43223-62J50	449B-14-6		410B-12
43110-54P20	449A-1		449C-14-6		410E-11
	449B-1	43223-62J60	449B-14-7	44102-54P61	410D-12
43110-54P70	449C-1		449C-14-7		410G-11
43130-60E10	449A-12	43223-62J70	449B-14-8	44102-64R10	410C-12
	449B-12		449C-14-8		410F-11
	449C-12	43223-62J80	449B-14-9	44105-61M00	443A-1
43138-61M00	449A-4		449C-14-9	44106-61M00	443A-11
	449B-4	43223-85E20	449A-13-3	44111-54P10	410C-4
	449C-4	43224-85E20	449A-13-4		410C-15
43139-61M00	449A-3	43225-85E20	449A-13-5		410D-4
	449B-3	43226-85E20	449A-13-6		410D-15
	449C-3	43227-85E20	449A-13-7		410F-14
43180-79J01	449A-9	43228-85E20	449A-13-8		410G-14
	449B-9	43231-85E20	449A-13-9	44111-54P50	410A-4
	449C-9	43250-54P00-27N	449A-6		410A-15
43210-54P00-09L	449A-2	43252-51K20-DB7	449B-6		410B-4
43210-54P50-0BK	449B-2		449C-6		410B-15
43210-54P80-0BK	449C-2-1	43290-79J10	449A-10		410E-14
43210-54P90-ZMS	449C-2-2		449B-10	44111-71C20	443A-4
43221-85E20	449A-13-1		449C-10		443A-14
43222-62J00	449B-13-1	43310-61M00	449A-7-1	44112-54PD0	410A-5
	449C-13-1		449B-7-1		410A-16
43222-62J10	449B-13-2		449C-7-1		410B-5
	449C-13-2	43310-74S00	449A-7-2		410B-16
43222-62J20	449B-13-3		449B-7-2		410D-16
	449C-13-3		449C-7-2		410E-4
43222-62J30	449B-13-4	43312-61M00	449A-8-1		410E-15
	449C-13-4		449B-8-1		410G-15
43222-62J40	449B-13-5		449C-8-1	44112-68H00	443A-5
	449C-13-5	43312-74S00	449A-8-2		443A-15
43222-62J50	449B-13-6		449B-8-2	44113-54P60	410C-5
	449C-13-6		449C-8-2		410C-16
43222-62J60	449B-13-7	43402-61MM0	430B-12		410D-5
	449C-13-7	43402-61MS0	430B-11		410F-4
43222-62J70	449B-13-8	43402-79J10	430A-11		410F-15
	449C-13-8	43421-79J10	400A-27		410G-4
43222-62J80	449B-13-9	43423-86G01	449A-5	44117-54P50	410A-13
	449C-13-9		449B-5		410B-2
43222-85E20	449A-13-2		449C-5		410B-13
43223-62J00	449B-14-1	43440-61M00	400A-28		410E-12
	449C-14-1	43459-65J00	400A-29	44117-54P60	410C-2
43223-62J10	449B-14-2	44101-54P53	410B-1		410C-13
	449C-14-2	44101-54P63	410C-1		410D-2
43223-62J20	449B-14-3		410D-1		410F-12
	449C-14-3	44101-54PE1	410E-1	44117-54PE0	410E-2
43223-62J30	449B-14-4	44101-54PF1	410G-1	44117-54PF1	410F-2
	449C-14-4	44101-64R21	410A-1		410G-2

PART NO.	FIG.NO.-REF.NO.
44117-61M51	443A-2
	443A-12
44117-64R20	410A-2
44118-54P50	410A-8
	410B-8
44118-54P60	410C-8
	410D-8
44118-54PE0	410E-7
44118-54PF1	410F-7
	410G-7
44118-61M51	443A-8
	443A-18
44119-54P50	410A-3
	410A-14
	410B-3
	410B-14
	410E-13
44119-54P60	410C-3
	410C-14
	410D-3
	410F-13
44119-54PE0	410E-3
44119-54PF1	410F-3
	410G-3
44119-61M51	443A-3
	443A-13
44120-54P50	410A-19
	410B-19
	410E-18
44120-54P61	410D-19
	410G-18
44120-64R10	410C-19
	410F-18
44121-54P50	410A-6
	410A-17
	410B-6
	410B-17
	410E-5
	410E-16
44121-54P60	410C-6
	410C-17
	410D-6
	410F-5
	410F-16
	410G-5
44121-79JA0	443A-6
	443A-16
44122-54PD0	410A-9
	410A-20
	410B-9

PART NO.	FIG.NO.-REF.NO.
	410B-20
	410C-9
	410C-20
	410D-9
	410D-20
	410E-8
	410E-19
	410F-8
	410F-19
	410G-8
	410G-19
44122-67LJ0	443A-9
	443A-19
44123-54P50	410A-7
	410A-18
	410B-7
	410B-18
	410E-6
	410E-17
44123-79JA0	443A-7
	443A-17
44124-54PD0	410A-10
	410A-21
	410B-10
	410B-21
	410C-7
	410C-10
	410C-18
	410C-21
	410D-7
	410D-10
	410D-18
	410D-21
	410E-9
	410E-20
	410F-6
	410F-9
	410F-17
	410F-20
	410G-6
	410G-9
	410G-17
	410G-20
44124-79JA0	443A-10
	443A-20
44125-54P50	410A-11
	410B-11
44125-54P60	410C-11
	410D-11
44125-54PE0	410E-10

PART NO.	FIG.NO.-REF.NO.
44125-54PF1	410F-10
	410G-10
44126-54P50	410A-22
	410B-22
	410E-21
44126-54P61	410D-22
	410G-21
44126-64R10	410C-22
	410F-21
44127-54P61	410D-14
	410G-13
44128-54P61	410D-13
	410G-12
44129-54P60	410D-17
	410G-16
45111-61M00	400A-1
45151-61M00	400A-2
45201-61M00	400A-19
45202-61M00	400A-21
45264-61M00	400A-23
45530-71L00	400A-20
	400A-22
45810-61M01	418A-1
45849-54P00	418A-2
	418A-3
45851-61M00	418A-4
46221-61M10	430A-2
	430B-2
46291-68H00	430A-9
	430B-9
46500-61MA0	430A-1
	430B-1
48110-53S01-GJL	451G-1
48110-53S11-GJL	451H-1-1
48110-53S21-GJL	451H-1-2
48110-53S30-GJL	451L-1
48110-53S40-GJL	451M-1-1
48110-53S50-GJL	451M-1-2
48110-60P11-GJL	451A-1
48110-60P31-GJL	451B-1
48110-60P41-GJL	451F-1-1
48110-60P50-GJL	451K-1-1
48110-61MD1-GJL	451E-1
48110-61ME1-GJL	451F-1-2
48110-61MJ1-GJL	451J-1
48110-61ML1-GJL	451K-1-2
48110-74S00-GJL	451C-1
48110-74S10-GJL	451D-1
48150-54P10-C48	451A-2
	451B-2

PART NO.	FIG.NO.-REF.NO.
	451C-2
	451D-2
	451E-2
	451F-2
	451G-2
	451H-2
	451J-2
	451K-2
	451L-2
	451M-2
48210-74S20	453A-1-4
	453C-1-4
48210-74S40	453B-1-2
	453D-1-2
48210-74SB0	453A-1-2
	453C-1-2
48210-86R21	453A-1-3
	453C-1-3
48210-86R41	453B-1-1
	453D-1-1
48210-86RB1	453A-1-1
	453C-1-1
48218-61M00	453A-3
	453B-3
	453C-3
	453D-3
48220-61M00	453C-2
	453D-2
48220-61M50	453A-2
	453B-2
48251-54P00	453C-14
	453D-14
48251-54P50	453A-16
	453B-16
48253-54P50	453A-4
	453B-4
48400-61M10-5PK	453B-8
	453D-6
48400-61M20-5PK	453A-8
	453C-6
48431-61M00	453A-9
	453B-9
	453C-7
	453D-7
48435-61M00	453A-10
	453B-10
	453C-8
	453D-8
48451-54P00	480A-1
	480B-1

PART NO.	FIG.NO.-REF.NO.
48452-61M00	480B-2
48452-61M50	480A-2
48481-61M10	453C-9
	453D-9
48481-61M51	453A-11
	453B-11
48525-61M00	480A-5
	480B-5
48525-61M50	480A-6
	480B-6
48571-68L00	480A-7
	480B-7
48575-68L00	480A-8
	480B-8
48580-54P01	480B-4
48580-54P51	480A-4
48810-79J01	480A-13
	480B-13
48817-68L00	480A-9
	480B-9
48830-61M00	480A-10
	480B-10
48841-68L00	480A-11
	480B-11
48871-68L00	480A-12
	480B-12
49400-68L01	490C-1
	490D-1
49400-68L51	490A-1
	490B-1
49511-61M50	490A-2
	490B-2
49600-54P00	490C-3-2
49600-54P50	490A-5-2
49600-61M00	490C-3-1
49600-61M10	490D-3
49600-61M50	490A-5-1
49600-61M60	490B-5
49720-61M00	490C-6
49720-61M50	490A-8
49751-58J00	490A-6
	490A-9
	490C-4
	490C-7
49751-58J10	490B-6
	490D-4
49812-61M00	490C-8
49812-61M50	490A-10
49891-61M10	490A-11
	490C-9

PART NO.	FIG.NO.-REF.NO.
49894-61M00	490A-12
	490C-10
50000	
51010-74S00	500B-14
51010-74S50	500D-14
51011-54P00	500C-14-2
51011-54P20	500A-14-2
51011-64R01	500A-14-1
51011-64R50	500C-14-1
51021-61M00	500C-15
	500D-15
51050-61M00	500C-16
51082-52S00	190D-16
	190F-15
	190G-14
51100-54P21	500A-1
	500B-1
51100-54P61	500C-1
	500D-1
51132-82003	500A-10
	500B-10
	500C-10
	500D-10
51200-54P20	500A-2
	500B-2
51200-54P60	500C-2
	500D-2
51232-62J00	500A-3
	500B-3
	500C-3
	500D-3
51233-54P00	500A-4
	500B-4
	500C-4
	500D-4
51280-61M00	500A-7
	500B-7
51280-61M50	500C-7
	500D-7
51290-54P00	500A-5
	500B-5
	500C-5
	500D-5

PART NO.	FIG.NO.-REF.NO.
51300-61M02	500A-6
	500B-6
51300-61M42	500C-6
	500D-6
51311-62J00	500A-8
	500B-8
	500C-8
	500D-8
51313-62J00	500A-9
	500B-9
	500C-9
	500D-9
51410-86R00	503A-1
	503B-1
51410-86R20	503C-1
	503D-1
51420-86R00	503A-2
	503B-2
51420-86R20	503C-2
	503D-2
51430-61M01	503A-3
	503B-3
	503C-3
	503D-3
51440-61M01	503A-4
	503B-4
	503C-4
	503D-4
51450-61M01	503A-5
	503B-5
	503C-5
	503D-5
51460-61M01	503A-6
	503B-6
	503C-6
	503D-6
51470-54P01	503A-7-1
	503B-7
	503C-7-1
	503D-7
51470-74S00	503A-7-2
	503C-7-2
51480-54P11	503A-8-1
	503B-8
	503C-8-1
	503D-8
51480-74S00	503A-8-2
	503C-8-2
51510-61M01	503A-9
	503B-9

PART NO.	FIG.NO.-REF.NO.
	503C-9
	503D-9
51520-61M01	503A-10
	503B-10
	503C-10
	503D-10
51543-65J01	503A-19
	503B-20
	503C-19
	503D-20
51550-61M01	503A-20
	503B-21
	503C-20
	503D-21
51570-61M00	503A-22
	503B-23
	503C-22
	503D-23
51570-61M51	503A-21
	503B-22
	503C-21
	503D-22
51630-82040	503A-28
	503B-29
	503C-28
	503D-29
51751-61M00	503A-11
	503B-11
	503C-11
	503D-11
51751-61M10	503A-12
	503B-12
	503C-12
	503D-12
51761-57T00	503A-14-2
	503C-14-2
51761-61J30	503A-13
	503B-13
	503C-13
	503D-13
51761-61M00	503A-14-1
	503B-14
	503C-14-1
	503D-14
51761-62J20	503A-15
	503C-15
51761-68H40	503A-16
	503B-15
	503C-16
	503D-15

PART NO.	FIG.NO.-REF.NO.
51761-79J00	202C-13
	202D-13
	503A-17
	503A-18
	503B-16
	503B-17
	503C-17
	503C-18
	503D-16
	503D-17
51761-86R00	503B-18
	503D-18
51761-86R10	503B-19
	503D-19
51870-74S00	500D-16
54100-61M01-C48	542A-1-2
54100-61M11-5PK	542A-1-1
54115-76G00	542A-3
54401-54P00	542A-5-1
54401-60R00	542A-5-2
54402-54P00	542A-6-1
54402-60R00	542A-6-2
55101-61M01-999	520A-1
55102-61M01-999	520A-11
55133-61M00	520A-2
55151-78451	530A-2
55156-66310	530A-3
55191-68L00	530A-4
55192-68L00	530A-5
55201-68L00	530A-6
55206-61M00	520A-8
55206-78452	530A-7
55311-61M10	520A-23
55321-61M00	520A-24
55401-61M00-999	530A-1
55402-61M00-999	530A-10
55611-61M20	530A-21
55621-72L00	530A-22
55800-61M02	530A-19
55810-61M02	520A-21
55830-61M01	520A-3
	520A-13

PART NO.	FIG.NO.-REF.NO.
55850-61M01	520A-4
	520A-14
55855-61M00	520A-5
	520A-15
55856-61M00	520A-6
	520A-16
55857-61M00	520A-7
	520A-17
55860-61M02	520A-9
	520A-19
55870-61M00	520A-10
	520A-20
55880-68L01	530A-9
	530A-18
55890-68L01	530A-8
	530A-17
56130-53S50	510B-1-4
56130-53S70	510B-1-5
56130-53S80	510B-1-2
56130-53S90	510B-1-3
56130-53SL0	510B-1-1
56130-74S00	510A-1-10
56130-74SA0	510A-1-9
56130-75S00	510B-1-6
56130-86R30	510A-1-6
56130-86R50	510A-1-8
56130-86R60	510A-1-2
56130-86R70	510A-1-4
56130-86RL0	510A-1-5
56130-86RP0	510A-1-7
56130-86RQ0	510A-1-1
56130-86RR0	510A-1-3
56160-74S00	510A-2-2
	510B-2-2
56160-86R00	510A-2-1
	510B-2-1
56210-61M01	510A-3
	510B-3
56220-61M01	510A-4
	510B-4
56310-61M00	510A-5
56315-61M00	510B-5
56320-61M00	510A-6
56324-50E51	510B-6
56325-61M00	510B-7
57300-54P00	570A-1
	570B-1
	570C-1
	570D-1
57410-54P00	570A-2

PART NO.	FIG.NO.-REF.NO.
	570B-2
	570C-2
	570D-2
57420-54P00	570A-3
	570B-3
	570C-3
	570D-3
57611-54P00	580A-1
57611-54P10	580B-1
57711-54P00	580A-2
57711-54P10	580B-2
58110-54P00	590A-12
	590B-12
	590C-12
	590D-12
58120-54P00	590A-26
	590B-26
	590C-26
	590D-26
58230-54P00	570A-6
	570B-6
	570C-6
	570D-6
58270-53S00	570A-7-2
	570C-7-2
58270-53S10	570B-7-2
	570D-7-2
58270-86R00	570A-7-1
	570C-7-1
58270-86R10	570B-7-1
	570D-7-1
58310-61M00	590A-1
	590B-1
	590C-1
	590D-1
58320-61MA0	590A-2
	590B-2
	590C-2
	590D-2
58322-61M00	590A-3
	590B-3
	590C-3
	590D-3
58330-53S00	590B-4
	590D-4
58330-61M00	590A-4
	590C-4
58333-54P00	590A-5
	590B-5
	590C-5

PART NO.	FIG.NO.-REF.NO.
	590D-5
58410-61M00	590A-6
	590B-6
	590C-6
	590D-6
58420-61MA0	590A-7
	590B-7
	590C-7
	590D-7
58422-61M00	590A-8
	590B-8
	590C-8
	590D-8
58430-61M00	590A-9
	590B-9
	590C-9
	590D-9
58433-54P00	590A-10
	590B-10
	590C-10
	590D-10
58610-53S00	590D-13
58610-53S10	590B-13
58610-61M02	590C-13
58610-61M12	590A-13
58612-61M00	590A-14
	590A-28
	590B-14
	590B-28
	590C-14
	590C-28
	590D-14
	590D-28
58613-61M00	590A-15
	590A-29
	590B-15
	590B-29
	590C-15
	590C-29
	590D-15
	590D-29
58615-68M00	590A-16
	590C-16
58620-61M00	590C-22
	590D-22
58620-61M10	590A-22
	590B-22
58624-79J00	590A-23
	590B-23
	590C-23

PART NO.	FIG.NO.-REF.NO.	PART NO.	FIG.NO.-REF.NO.	PART NO.	FIG.NO.-REF.NO.
	590D-23		590B-35		590D-45
58632-61M10	590A-17	58724-79J00	590A-36	59280-54P01	590A-47
	590A-30		590B-36		590B-47
	590B-17		590C-36		590C-47
	590B-30		590D-36		590D-47
	590C-17	58741-61M00	590A-32	59284-54P01	590A-48
	590C-30		590B-32		590B-48
	590D-17		590C-32		590C-48
	590D-30		590D-32		590D-48
58633-61M00	590A-18	58742-61M00	590A-33	59285-54P00	590A-49
	590A-31		590B-33		590B-49
	590B-18		590C-33		590C-49
	590B-31		590D-33		590D-49
	590C-18	58751-61M00	590A-37	59290-54P00	590A-50
	590C-31		590B-37		590B-50
	590D-18		590C-37		590C-50
	590D-31		590D-37		590D-50
58641-61M00	590A-19	58771-61MA0	590A-38	59300-54P10	590A-55
	590B-19		590B-38		590B-55
	590C-19		590C-38	59300-54P40	590C-55
	590D-19		590D-38		590D-55
58642-61M00	590A-20	59100-61MA0	590C-39-1	59411-54P00	590A-56
	590B-20		590D-39		590B-56
	590C-20	59100-61MB0	590A-39-1		590C-56
	590D-20		590B-39		590D-56
58651-61M00	590A-24	59100-61MC0	590C-39-2	59461-54P00	590A-57
	590B-24	59100-61MD0	590A-39-2		590B-57
	590C-24	59140-61M00	590C-40		590C-57
	590D-24		590D-40		590D-57
58661-61M10	590A-21	59140-61M10	590A-40	59700-54P00	590A-60-1
	590A-34		590B-40		590B-60-1
	590B-21	59150-61M00	590C-41		590C-60-1
	590B-34		590D-41		590D-60-1
	590C-21	59150-61M10	590A-41	59700-54P10	590A-60-2
	590C-34		590B-41		590B-60-2
	590D-21	59230-54P01	590A-42		590C-60-2
	590D-34		590B-42		590D-60-2
58671-61MA0	590A-25		590C-42	59744-79J00	590A-46
	590B-25		590D-42		590A-51
	590C-25	59234-54P01	590A-43		590B-46
	590D-25		590B-43		590B-51
58680-53S00	590B-16		590C-43		590C-46
	590D-16		590D-43		590C-51
58710-61M02	590A-27	59235-54P00	590A-44		590D-46
	590B-27		590B-44		590D-51
	590C-27		590C-44		
	590D-27		590D-44		
58720-61M00	590C-35	59240-54P00	590A-45	60000	
	590D-35		590B-45		
58720-61M10	590A-35		590C-45		

PART NO.	FIG.NO.-REF.NO.	PART NO.	FIG.NO.-REF.NO.	PART NO.	FIG.NO.-REF.NO.
61111-61MA2	600A-1		600C-11		600C-26-2
	600B-1		600D-15		600D-31-2
	600C-1	61212-61M10	600A-12	61515-61M00	600A-26-1
	600D-1		600B-16		600B-31-1
61112-61M00	600A-3		600C-12		600C-27-1
	600B-3		600D-16		600D-32-1
	600C-3	61213-53S00	600B-17	61515-61M10	600A-26-2
	600D-3		600D-17		600B-31-2
61113-61M00	600A-4	61213-61M00	600A-13		600C-27-2
	600B-4		600C-13		600D-32-2
	600C-4	61214-61M00	600A-14	61516-61M00	600A-27
	600D-4		600B-18		600B-32
61114-61M00	600A-5		600C-14		600C-28
	600B-5		600D-18		600D-33
	600C-5	61215-61M10	600C-15	61518-68L00	600A-28
	600D-5		600D-19		600B-33
61115-61M00	600A-6	61220-53S00	600B-19		600C-29
	600B-6		600D-20		600D-34
	600C-6	61220-61M00	600A-15	61523-61M02	600A-29
	600D-6		600C-16		600B-34
61116-53S00	600B-7	61241-63J00	600A-19		600C-30
	600D-7		600B-24		600D-35
61117-53S00	600B-8		600C-20	61524-54P00	600A-30
	600D-8		600D-25		600B-35
61118-53S00	600B-9	61310-86R00	600A-20		600C-31
	600D-9		600B-25		600D-36
61119-53S00	600B-10		600C-21	61525-54P00	600A-31
	600D-10		600D-26		600B-36
61130-53S00	600B-11	61320-86R00	600A-21		600C-32
	600D-11		600B-26		600D-37
61130-54P00	600A-7		600C-22	61526-54P00	600A-32
	600C-7		600D-27		600B-37
61140-53S00	600B-12	61511-79J00	600A-22		600C-33
	600D-12		600B-27		600D-38
61140-54P10	600A-8		600C-23	61527-54P00	600A-33
	600C-8		600D-28		600B-38
61161-61MA2	600A-2	61512-61M00	600A-23		600C-34
	600C-2		600B-28		600D-39
61161-61MB2	600B-2		600C-24	61541-61M00	600A-34
	600D-2		600D-29		600B-39
61180-53S00	600B-13	61513-61M00	600A-24		600C-35
	600D-13		600B-29		600D-40
61180-54P00	600A-9		600C-25	61550-61MA0	600A-35
	600C-9		600D-30		600B-40
61190-53S00	600B-14	61514-61M00	600A-25-1		600C-36
	600D-14		600B-30-1		600D-41
61190-54P10	600A-10		600C-26-1	61560-61MA0	600A-36
	600C-10		600D-31-1		600B-41
61211-54P00	600A-11	61514-61M10	600A-25-2		600C-37
	600B-15		600B-30-2		600D-42

PART NO.	FIG.NO.-REF.NO.
62100-54P00	600A-39
	600B-44
	600C-40
	600D-45
62110-61M00	600A-40
	600A-46
	600B-45
	600B-51
	600C-41
	600C-47
	600D-46
	600D-52
62113-61M00	600A-41
	600A-47
	600B-46
	600B-52
	600C-42
	600C-48
	600D-47
	600D-53
62126-61MA0	600A-42
	600B-47
	600C-43
	600D-48
62150-79J01	600A-43
	600B-48
	600C-44
	600D-49
62210-54P00	600A-44
	600B-49
	600C-45
	600D-50
62300-54P01	600A-45
	600B-50
	600C-46
	600D-51
62326-61MA0	600A-48
	600B-53
	600C-49
	600D-54
62350-61M00	600A-49
	600B-54
	600C-50
	600D-55
62410-54P00	600A-50
	600B-55
	600C-51
	600D-56
62600-53S00	600A-51-2
	600B-56

PART NO.	FIG.NO.-REF.NO.
	600C-52-2
	600D-57
62600-54P00	600A-51-1
	600C-52-1
62700-61M02	600A-52
	600B-57
62700-61M12	600C-53
	600D-58
62800-54P10	600C-54
	600D-59
62800-61M00	600A-53
	600B-58
62830-61M00	600A-54
	600B-59
	600C-55
	600D-60
63110-54P00	640A-1-2
	640B-1-2
63110-54P10	640A-1-1
	640B-1-1
63140-54P00	640A-2
	640B-2
63144-58J00	640A-3
	640A-25
	640B-3
	640B-25
63151-54P00	640A-4
	640B-4
63191-25C00	805A-15
	805B-15
63211-54P00	640A-6
	640B-6
63220-54P00	640A-7
	640B-7
63231-54P00	640A-8
	640B-8
63240-54P00	640A-9
	640B-9
63243-72J00	640A-10
	640A-32
	640B-10
	640B-32
63310-54P00	640A-11
	640B-11
63314-63G00	600A-37
	600B-42
	600C-38
	600D-43
63330-54P00	640A-12
	640B-12

PART NO.	FIG.NO.-REF.NO.
63340-54P00	640A-13
	640B-13
63342-54P00	640A-22
	640B-22
63361-54P00	640A-14
	640B-14
63410-54P00	640A-15
	640B-15
63431-61MA0	640A-16
	640B-16
63432-61M00	640A-17
	640B-17
63481-54P01	640A-18
	640B-18
63482-54P00	640A-19
	640B-19
63483-54P00	640A-20
	640B-20
63510-54P00	640A-23-2
	640B-23-2
63510-54P10	640A-23-1
	640B-23-1
63540-54P00	640A-24
	640B-24
63551-54P00	640A-26
	640B-26
63611-54P00	640A-28
	640B-28
63620-54P00	640A-29
	640B-29
63631-54P00	640A-30
	640B-30
63640-54P00	640A-31
	640B-31
63710-54P00	640A-33
	640B-33
63730-54P00	640A-34
	640B-34
63740-54P00	640A-35
	640B-35
63742-54P00	640A-45
	640B-45
63761-54P00	640A-36
	640B-36
63810-54P00	640A-37
	640B-37
63831-61MA0	640A-38
	640B-38
63832-61M00	640A-39
	640B-39

PART NO.	FIG.NO.-REF.NO.
63881-54P01	640A-40
	640B-40
63882-54P00	640A-41
	640B-41
63883-54P00	640A-42
	640B-42
64111-54P01-P11	640A-46
	640B-46
64111-54P01-P21	640A-47
	640B-47
64111-54P01-P31	640A-48
	640B-48
64111-54P01-P41	640A-49
	640B-49
64112-54P00	640A-50
	640B-50
64113-61M00	640A-51
	640A-62
	640B-51
	640B-62
64113-63J00	640A-52
	640A-63
	640B-52
	640B-63
64114-86R00	640A-53
	640B-53
64120-54P00	640A-54
	640B-54
64130-54P00	640A-55
	640B-55
64141-54P00	640A-56
	640B-56
64511-54P01-P11	640A-57
	640B-57
64511-54P01-P21	640A-58
	640B-58
64511-54P01-P31	640A-59
	640B-59
64511-54P01-P41	640A-60
	640B-60
64512-54P00	640A-61
	640B-61
64514-86R00	640A-64
	640B-64
64520-54P00	640A-65
	640B-65
64530-54P00	640A-66
	640B-66
64541-54P00	640A-67
	640B-67

PART NO.	FIG.NO.-REF.NO.
64571-54P00	640A-68
	640B-68
64850-54P00	640A-69
	640B-69
65111-54P10	660A-1
65111-54PV0	660B-1
65112-61MA0	660A-13
	660B-8
65120-54P50	660B-2
65120-55P10	660A-2
65130-54P00	660A-3
	660B-3
65150-54P00	660A-4
65161-54P00	660A-5
65162-54P00	660A-6
65163-54P00	660A-7
65164-54P00	660A-8
65170-54P50	660B-4
65171-63J00	660A-12
65500-86R00	600A-55-1
	600B-60-1
	600C-56-1
65500-86R10	600A-55-2
	600B-60-2
	600C-56-2
	600D-61
65514-54P00	600A-56
	600B-61
	600C-57
	600D-62
65515-54P00	600A-57
	600B-62
	600C-58
	600D-63
65560-61MA1	600A-58
	600B-63
	600C-59
	600D-64
68001-54P01	800A-1
	800B-1
	800C-1
	800D-1
68002-54P01	800A-2
	800B-2
	800C-2
	800D-2
68003-54P01	801A-1
	801B-1
68004-54P01	801A-2
	801B-2

PART NO.	FIG.NO.-REF.NO.
69100-54P01	805A-1-2
	805B-1-2
69100-86R00	805A-1-1
	805B-1-1
69310-68LA0	800A-3
	800B-3
	800C-3
	800D-3
69314-60G00	208B-29
69320-68LA0	800A-4
	800B-4
	800C-4
	800D-4
69330-68LA0	800A-5
	800B-5
	800C-5
	800D-5
69340-68LA0	800A-6
	800B-6
	800C-6
	800D-6
69410-68LA0	801A-3
	801B-3
69420-68LA0	801A-4
	801B-4
69430-68LA0	801A-5
	801B-5
69440-68LA0	801A-6
	801B-6
69510-68L01	805A-2
	805B-2
69571-76G00	805A-3
	805B-3
70000	
71100-55P01	717B-36-2
	717C-33
	717D-37-2
	717E-37-2
71100-64R02	717A-37
	717B-36-1
	717D-37-1
	717E-37-1
71131-55P00	717B-37-2
	717C-34

PART NO.	FIG.NO.-REF.NO.
	717D-38-2
	717E-38-2
71131-64R00	717A-38
	717B-37-1
	717D-38-1
	717E-38-1
71132-55P00	717B-38-2
	717C-35
	717D-39-2
	717E-39-2
71132-64R00	717A-39
	717B-38-1
	717D-39-1
	717E-39-1
71710-86R00-2KW	717A-1-8
	717B-1-11
	717D-1-11
71710-86R00-A9R	717A-1-2
	717B-1-2
	717D-1-2
71710-86R00-A9T	717B-1-3
	717D-1-3
71710-86R00-BZU	717A-1-3
	717B-1-4
	717D-1-4
71710-86R00-BZV	717A-1-4
	717B-1-5
	717D-1-5
71710-86R00-BZW	717A-1-5
	717B-1-6
	717D-1-6
71710-86R00-BZY	717A-1-6
	717B-1-7
	717D-1-7
71710-86R00-DBJ	717B-1-8
	717D-1-8
71710-86R00-DBK	717B-1-9
	717D-1-9
71710-86R00-EZZ	717A-1-7
	717B-1-10
	717D-1-10
71710-86R10-2KW	717E-1-11
71710-86R10-A9R	717E-1-2
71710-86R10-A9T	717E-1-3
71710-86R10-BZU	717E-1-4
71710-86R10-BZV	717E-1-5
71710-86R10-BZW	717E-1-6
71710-86R10-BZY	717E-1-7
71710-86R10-DBJ	717E-1-8
71710-86R10-DBK	717E-1-9

PART NO.	FIG.NO.-REF.NO.
71710-86R10-EZZ	717E-1-10
71711-86R00-N49	717A-1-1
	717B-1-1
	717C-1
	717D-1-1
71711-86R10-N49	717E-1-1
71712-86R00	717A-2
	717B-2
	717C-2
	717D-2
	717E-2
71713-54P00	717A-3
	717B-3
	717C-3
	717D-3
	717E-3
71713-86R00-5PK	717A-4
	717B-4
	717C-4
	717D-4
	717E-4
71714-86R00	717A-5
	717B-5
	717C-5
	717D-5
	717E-5
71715-86R00	717A-6
	717B-6
	717C-6
	717D-6
	717E-6
71721-86R00-5PK	717A-7
	717B-7
	717C-7
	717D-7
71721-86R10-5PK	717E-7
71731-54P00	717A-8
	717B-8
	717C-8
	717D-8
	717E-8
71732-54P00	717A-9
	717B-9
	717C-9
	717D-9
	717E-9
71733-53S00	717B-11
	717C-10
	717D-11
	717E-11

PART NO.	FIG.NO.-REF.NO.
71733-54P00	717A-10
	717B-10
	717D-10
	717E-10
71734-53S00	717B-13
	717C-11
	717D-13
	717E-13
71734-54P00	717A-11
	717B-12
	717D-12
	717E-12
71751-86R00-0PG	717B-14
	717C-12
	717D-14
	717E-14
71751-86R20-5PK	717A-12
71752-86R00-0PG	717B-15
	717C-13
	717D-15
	717E-15
71752-86R20-5PK	717A-13
71771-86R00-0PG	717B-16
	717C-14
	717D-16
	717E-16
71771-86R10-0BK	717A-14
71772-86R00-0PG	717B-17
	717C-15
	717D-17
	717E-17
71772-86R10-0BK	717A-15
71773-54P01	717A-16
	717B-18
	717C-16
	717D-18
	717E-18
71781-86R00	717A-17
	717B-19
	717D-19
	717E-19
71782-86R00	717A-18
	717B-20
	717D-20
	717E-20
71790-86R00-C48	717C-17
	717D-21
	717E-21
71790-86R10-C48	717B-21
71790-86R30-H22	717A-19

PART NO.	FIG.NO.-REF.NO.
71791-54P00	717A-20
	717B-22
	717D-22
	717E-22
71792-54P00	717A-21
	717B-23
	717D-23
	717E-23
71811-54P01-2KW	718A-1-11
71811-54P01-A9R	718A-1-2
71811-54P01-A9T	718A-1-3
71811-54P01-BZU	718A-1-4
71811-54P01-BZV	718A-1-5
71811-54P01-BZW	718A-1-6
71811-54P01-BZY	718A-1-7
71811-54P01-DBJ	718A-1-8
71811-54P01-DBK	718A-1-9
71811-54P01-EZZ	718A-1-10
71811-54P01-N49	718A-1-1
71811-54P11-2KW	718B-1-11
71811-54P11-A9R	718B-1-2
71811-54P11-A9T	718B-1-3
71811-54P11-BZU	718B-1-4
71811-54P11-BZV	718B-1-5
71811-54P11-BZW	718B-1-6
71811-54P11-BZY	718B-1-7
71811-54P11-DBJ	718B-1-8
71811-54P11-DBK	718B-1-9
71811-54P11-EZZ	718B-1-10
71811-54P11-N49	718B-1-1
71812-54P00	718A-2
	718B-2
71812-78F00	805A-18
	805B-18
71831-54P00	718A-3
	718B-3
71832-54P00	718A-4
	718B-4
71871-86R00-0BK	718A-5
	718B-5
71873-86R10-0BK	718A-6
	718B-6
71874-86R10-0BK	718A-7
	718B-7
72110-54P00-C48	717A-31
	717C-27
72110-86R00-DHW	717B-33
	717D-34
	717E-34
72121-54P00	717A-33

PART NO.	FIG.NO.-REF.NO.
	717C-29
72122-54P00	717A-34
	717C-30
72310-54P10	570A-17
	570B-17
	570C-17
	570D-17
72321-54P00	580A-4
	580B-4
72322-54P00	580A-6
	580B-6
72323-61M00	750A-20
72330-54P00-5PK	570C-20
	570D-20
72330-54P10-5PK	570A-20
	570B-20
72332-54P00-5PK	570A-21
	570B-21
	570C-21
	570D-21
72340-54P00-5PK	570C-22
	570D-22
72340-54P10-5PK	570A-22
	570B-22
72342-54P00-5PK	570A-23
	570B-23
	570C-23
	570D-23
72351-54P00	580A-8
	580B-8
72352-54P00	580A-9
	580B-9
72353-54P00	750A-21
72355-61M00	750A-22
72360-54P00	750A-23
72361-54P00	570A-24
	570B-24
	570C-24
	570D-24
72362-61M00	570A-25
	570B-25
	570C-25
	570D-25
72364-54P00	570A-26
	570B-26
	570C-26
	570D-26
72368-54P00	570A-28
	570B-28
	570C-28

PART NO.	FIG.NO.-REF.NO.
	570D-28
72370-54P00	750A-25
72372-80E00	570A-30
	570B-30
	570C-30
	570D-30
72390-54P00	750A-27
72411-61M00	750A-29
72440-54P00	570A-10
	570B-10
	570C-10
	570D-10
72450-61M00	741B-14
72450-61M10	741A-14
72499-84G00	150A-40
72521-61M00	590B-61
	590D-61
72521-61M10	590A-61
	590C-61
72522-61M00	590A-62
	590B-62
	590C-62
	590D-62
72524-83E10	590A-63
	590B-63
	590C-63
	590D-63
72532-86R00	717C-18
	717D-24
	717E-24
72610-54P00-5PK	580A-10-1
	580A-10-2
72610-54P10-C48	580A-10-3
	580B-10
72620-54P00-5PK	580A-12-1
	580A-12-2
72620-54P10-C48	580A-12-3
	580B-12
72811-54P00	750A-36
72813-61M00	750A-37
72814-54P00	750A-38
72821-54P00	750A-39
72823-61M00	750A-40-1
72823-61M10	750A-40-2
72824-54P00	750A-41
73110-86R01-5PK	720B-1
73110-86R10-5PK	720A-1
73114-54P00	720A-2
	720B-2
73123-61M00	720A-3

PART NO.	FIG.NO.-REF.NO.
	720B-3
73132-57L00	720A-46
	720B-45
	740A-4
	740A-7
	740B-6
	740B-9
	740C-4
	740C-7
	740D-6
	740D-9
73200-86R20	720B-4
73200-86R30	720A-4
73261-54P00	720A-5
	720B-5
73262-54P00	720A-6
	720B-6
73291-50G03	720A-7
	720B-7
73310-86R00-5PK	720B-20
73310-86R10-5PK	720A-20
73314-62J00	720A-21
	720B-21
73410-54P00-5PK	720B-24
73410-54P10-5PK	720A-24
73413-65D00	720A-25
	720B-25
73440-50J01	720A-27
	720B-27
73461-54M00	720A-26
	720B-26
73630-54P00-5PK	730A-1-1
	730B-1-1
	730C-1-1
73630-54P00-AQS	730A-1-2
	730A-1-3
	730B-1-2
	730B-1-3
	730C-1-2
	730C-1-3
73651-54P10-5PK	730A-2
	730B-2
	730C-2
73652-54P10-5PK	730A-3
	730B-3
	730C-3
73661-54P10	730A-4
	730B-4
	730C-4
73662-68L00	730A-5

PART NO.	FIG.NO.-REF.NO.
	730B-5
	730C-5
73681-54P00	730A-6
	730B-6
	730C-6
73691-54P00	730A-7
	730B-7
	730C-7
73810-54P20-5PK	720B-28
73810-54P30-5PK	720A-28
73812-54P00-5PK	720A-30
	720B-30
73820-86R20-DBW	720B-34-1
73820-86R20-DBY	720B-34-2
73820-86R30-DBW	720A-34-1
73820-86R30-DBY	720A-34-2
73821-54P00-5PK	392A-1
73822-86R20-QMC	720B-32-1
73822-86R20-QMD	720B-32-2
73822-86R30-QMC	720A-32-1
73822-86R30-QMD	720A-32-2
73823-54P00-5PK	720A-37-1
	720B-37
73823-54P10-5PK	720A-37-2
73831-86R20-QMC	720B-39-1
73831-86R20-QMD	720B-39-2
73831-86R30-QMC	720A-39-1
73831-86R30-QMD	720A-39-2
73832-86R00-5PK	720B-40-1
73832-86R10-5PK	720A-40
73832-86R20-5PK	720B-40-2
73833-54P00-5PK	720A-41-1
73833-54P10-5PK	720A-41-2
73834-54P00-5PK	720B-41
73834-54P10-5PK	720A-42
73835-86R00	720B-42
73835-86R10	720A-43
73841-54P00	720B-43
73841-54P10	720A-44
73851-54P00-BML	720A-36
	720B-36
73870-61M00	720B-44
73870-61M10	720A-45
73881-86R00	720B-46
73881-86R10	720A-47
73891-83E00-5PK	720A-8
	720B-8
73910-86R00	720A-57
	720B-56
73950-54P00-5PK	720B-57

PART NO.	FIG.NO.-REF.NO.
73950-54P10-5PK	720A-58
74100-54P71	732F-1
74100-54PH1	732C-1-1
74100-54PJ1	732C-1-2
74100-54PK0	732A-1-2
74100-61M00	732D-1
74100-61M51	732E-1
74100-61MA0	732A-1-1
74100-61MF1	732B-1-1
74100-61MG1	732B-1-2
74111-61M00	732D-2
	732E-2
74111-61M30	732F-2
74111-61MA0	732A-2-1
	732B-2-1
74111-61MC0	732A-2-2
	732B-2-2
74111-61MD0	732C-2-1
74111-61ME0	732C-2-2
74112-61M00	732D-3
	732E-3
74112-61M30	732F-3
74112-61MA0	732A-3-1
	732B-3-1
74112-61MC0	732A-3-2
	732B-3-2
74112-61MD0	732C-3-1
74112-61ME0	732C-3-2
74114-61M00	732D-4
	732E-4
	732F-4
74114-61MA0	732A-4
	732B-4
	732C-4
74115-61M00	732D-5
	732E-5
	732F-5
74115-61MA0	732A-5
	732B-5
	732C-5
74115-65D10	732A-6
	732B-6
	732C-6
	732D-6
	732E-6
	732F-6
74116-60P01	732A-7
	732B-7
	732C-7
	732D-7

PART NO.	FIG.NO.-REF.NO.
	732E-7
	732F-7
74117-61M00	732A-8
	732B-8
	732C-8
	732D-8
	732E-8
	732F-8
74118-61M00	732A-9
	732B-9
	732C-9
	732D-9
	732E-9
	732F-9
74118-63J01	732A-10
	732B-10
	732C-10
	732D-10
	732E-10
	732F-10
74119-63J00	732A-11
	732B-11
	732C-11
	732D-11
	732E-11
	732F-11
74119-78F10	732A-12
	732B-12
	732C-12
	732D-12
	732E-12
	732F-12
74120-61M00	732D-13
	732E-13
	732F-13
74120-61MA0	732A-13
	732B-13
	732C-13
74129-76G00	248B-11
74134-58J00	732B-14
	732C-14
	732E-14
	732F-14
74140-61M00	732A-14
	732B-15
	732D-14
	732E-15
74150-61M00	732D-15
	732E-16
	732F-15

PART NO.	FIG.NO.-REF.NO.
74150-61MA0	732A-15
	732B-16
	732C-15
74151-71B00	732A-16
	732B-17
	732D-16
	732E-17
74163-61M00	732A-17
	732B-18
	732C-16
	732D-17
	732E-18
	732F-16
74172-61M10	732A-18
	732B-19
	732C-17
	732D-18
	732E-19
	732F-17
74174-61M10	732A-19
	732B-20
	732C-18
	732D-19
	732E-20
	732F-18
74176-61M10	732A-20
	732B-21
	732C-19
	732D-20
	732E-21
	732F-19
74178-61M10	732A-21
	732B-22
	732C-20
	732D-21
	732E-22
	732F-20
74191-61M00	732A-22
	732B-23
	732C-21
	732D-22
	732E-23
	732F-21
74192-61M00	732A-23
	732B-24
	732C-22
	732D-23
	732E-24
	732F-22
74193-61M00	732A-24

PART NO.	FIG.NO.-REF.NO.
	732B-25
	732C-23
	732D-24
	732E-25
	732F-23
74194-61M00	732A-25
	732B-26
	732C-24
	732D-25
	732E-26
	732F-24
74195-61M00	732A-26
	732B-27
	732C-25
	732D-26
	732E-27
	732F-25
74196-61M00	732A-27
	732B-28
	732D-27
	732E-28
74197-54P00	732C-26
	732F-26
74197-61M10	732A-28
	732B-29
	732D-28
	732E-29
74211-61M00	732D-29
	732E-30
	732F-27
74211-61MA0	732A-29
	732B-30
	732C-27
74212-61M00	732D-30
	732E-31
	732F-28
74212-61MA0	732A-30
	732B-31
	732C-28
74213-61M00	732D-31
	732E-32
	732F-29
74213-61MA0	732A-31
	732B-32
	732C-29
74214-61M00	732D-32
	732E-33
74214-61M10	732A-32
	732B-33
74214-61M20	732F-30

PART NO.	FIG.NO.-REF.NO.
74214-61M30	732C-30
74215-61M00	732E-34
	732F-31
74215-61M10	732B-34
	732C-31
74215-61M20	732D-33
74215-61M30	732A-33
74216-61M10	732A-34
	732B-35
	732C-32
	732D-34
	732E-35
	732F-32
74218-61M00	732A-35
	732B-36
	732C-33
	732D-35
	732E-36
	732F-33
74219-61M00	732A-36
	732B-37
	732C-34
	732D-36
	732E-37
	732F-34
74220-61M00	732A-37
	732B-38
	732C-35
	732D-37
	732E-38
	732F-35
74221-61M00	732A-38
	732B-39
	732C-36
	732D-38
	732E-39
	732F-36
74222-61M00	732A-39
	732B-40
	732D-39
	732E-40
74223-61M00	732A-40
	732D-40
74400-54P00-5PK	73AA-1-4
74400-54P10-5PK	73AA-1-3
74400-54P20-5PK	73AA-1-2
74400-54P30-5PK	73AA-1-1
74451-54P00	73AA-2-2
74451-54P10	73AA-2-1
74452-54P00	73AA-3-2

PART NO.	FIG.NO.-REF.NO.
74452-54P10	73AA-3-1
74461-61M00-5PK	73AA-4
74531-68L00	73AA-5
74532-68L00	73AA-6
74620-54P00	730C-8
74620-54P10	730A-8
	730B-8
74651-61M00	730A-10
	730B-10
74652-61M00	730A-11
74652-61M10	730B-11
74653-61M00	730A-12
74653-61M10	730B-12
74654-74S00	730B-13
74655-74S00	730B-14
75110-54P10-R3F	741B-1-1
75110-54P60-R3F	741A-1-1
75110-74S10-R3F	741B-1-2
75110-74S50-R3F	741A-1-3
75110-74S60-R3F	741A-1-2
75130-54P00-R3F	741A-4
	741B-4
75221-54P00	741B-5
75221-54P20	741A-5
75231-61M11	741A-6
	741B-6
75411-61M10	741A-8
75411-61M20	741B-8
75411-76G00	360B-15
	490D-5
	755A-2
	755B-2
75412-61M00	741B-9
75412-61M10	741A-9
75420-86R00	750A-1
75431-73H01	750A-2
	750A-3
75450-68L00	750A-4
75460-54P00-GMY	741A-10
	741B-10
75481-61M00	741A-12
	741B-12
75491-61M00	741A-11-1
	741A-11-2
	741B-11-1
	741B-11-2
75491-74S00	741A-11-3
	741B-11-3
75811-54P00-5PK	740A-1
75811-54P10-5PK	740C-1

PART NO.	FIG.NO.-REF.NO.
75811-54P21-QMC	740B-1
75811-54P31-QMC	740D-1
75822-61M10-5PK	740B-3
	740D-3
75825-61M00-5PK	740B-4
	740D-4
75830-54P00-5PK	740A-3
	740B-5
	740C-3
	740D-5
75840-54P00-5PK	740A-6
	740B-8
	740C-6
	740D-8
75850-54P00-5PK	740A-9-1
	740C-9
75850-61M00-5PK	740B-11-1
	740D-11-1
75850-74S00-5PK	740B-11-2
	740D-11-2
75850-74S10-5PK	740A-9-2
75852-61M00-5PK	740B-12
	740D-12
75860-54P00-5PK	740A-10
	740B-13
	740C-10
	740D-13
75871-61M00	740A-11
	740B-14
	740C-11
	740D-14
75872-54P00	740A-12
	740C-12
75872-61M00	740B-15
	740D-15
76110-54P00-6GS	745A-1
76120-54P00-6GS	745A-4
76130-61M00-5PK	745A-7
76140-61M00-5PK	745A-9
76151-61M00-5PK	745A-11
76158-68L00	745A-12
76161-61M00-5PK	745A-13
76170-54P00-5PK	745A-14
76180-54P00-5PK	745A-16
76191-54P01-5PK	745A-18
76192-54P00-5PK	745A-19
76210-54P10-6GS	745A-20
76220-54P10-6GS	745A-21
76231-54P00-5PK	745A-22
76241-54P00-5PK	745A-23

PART NO.	FIG.NO.-REF.NO.
76250-54P00-6GS	745A-24
76260-54P00-6GS	745A-27
76270-54P01-5PK	745A-30-1
76270-54P11-5PK	745A-30-2
76272-54P00-5PK	745A-34
76273-54P00-5PK	745A-35
76275-61M00-5PK	745A-31
76276-61M00-5PK	745A-37
76280-54P01-5PK	745A-36
76291-54P00	745A-40
76292-54P00	745A-41
76295-54P00	745A-42
76296-54P00	745A-43
76310-61M00-5PK	745A-32
	745A-38
76410-61M00-6GS	745A-47
	745A-48
76410-61M10-6GS	745A-49
76420-63J01	755B-3
76430-54P00	755B-4
76430-54P10	755A-3
76480-54P00	758A-1
76490-54P00	758A-2
76520-72M00	755A-4
	755B-5
76721-57L00-5PK	745A-44
77116-60B00	772A-1
	772B-1
77117-54P00	772A-2
	772B-2
77121-63J00	772A-3
	772B-3
77122-60B00	805A-19
	805B-19
77151-54P00	750A-6
	750A-7
	750A-8
	750A-9
77151-54P10	750A-5
	750A-10
	755A-6
	755B-6
77151-82000	805A-16
	805B-16
77191-76F00	718A-9
	718B-9
	772A-4
	772B-4
77210-54P00-5PK	774A-1
77220-54P00-5PK	774A-3

PART NO.	FIG.NO.-REF.NO.
77230-54P10-5PK	774A-5
77240-54P10-5PK	774A-7
77250-54P00-5PK	774A-9
77260-54P00-5PK	774A-11
77330-61M00	772A-10
	772B-10
77420-54P01	800A-35
	800B-35
	800C-35
	800D-35
77423-54P00	800A-36
	800A-40
	800B-36
	800B-40
	800C-36
	800C-40
	800D-36
	800D-40
	801A-33
	801A-39
	801B-33
	801B-39
77424-54P00	800A-37
	800A-41
	800B-37
	800B-41
	800C-37
	800C-41
	800D-37
	800D-41
77430-54P01	800A-39
	800B-39
	800C-39
	800D-39
77440-54P02	801A-32
	801B-32
77442-54P00	801A-36
	801B-36
77443-54P00	801A-34
	801A-40
	801B-34
	801B-40
77444-54P00	801A-35
	801A-41
	801B-35
	801B-41
77450-54P02	801A-38
	801B-38
77452-54P00	801A-42
	801B-42

PART NO.	FIG.NO.-REF.NO.
77591-75000	820A-15
	820B-15
	820C-15
	820D-15
77811-63J00-0PG	780A-2
77811-65J00-0PG	717A-32
	717B-34
	717C-28
	717D-35
	717E-35
	780A-1
77821-79J00-0PG	780A-3
77831-54P00-0PG	780A-4
77831-85P01-BVV	780A-6
77841-61M00-A93	780A-5
78100-54P00-6GS	760A-1-1
78100-54P10-6GS	760A-1-2
78100-86R00-6GS	760A-1-3
78100-86R10-6GS	760A-1-4
78110-86R40-6GS	760B-1-1
78110-86R50-6GS	760B-1-2
78121-51K00-6GS	760A-2
	760B-2
78122-51K00-6GS	760A-3
	760B-3
78130-54P01	772A-11
78132-61M00	772A-12
	772A-14
78140-54P01	772A-13
78150-57L10	772A-15
78161-61M00	772B-11
78190-86R00-5PK	760A-4
	760B-4
78210-54P00-0CB	772B-12-1
78210-54P10-PNG	772B-12-2
78220-54P00-0CB	772B-13-1
78220-54P10-PNG	772B-13-2
78463-78000	811A-7
78700-54P01-PLT	777A-1
78710-61M01	777A-2
78712-61M00	777A-3
78713-61M00	777A-4
	777A-7
78720-61M00	777A-5
78722-61M00	777A-6
78731-61M00	777A-8
78732-61M00	777A-9
78733-61M00	777A-10
78733-68L00	777A-20
78736-68L00	777A-40

PART NO.	FIG.NO.-REF.NO.
	777A-42
78741-61M00	777A-11
78742-61M00	777A-12
78743-61M00	777A-13
78751-61M00	777A-14
78752-61M00	777A-15
78753-61M00	777A-16
78761-61M00	777A-17
78762-61M00	777A-18
78763-61M00	777A-19
78771-54P00	777A-21
78772-61M00	777A-22
78773-61M00	777A-23
78774-61M00	777A-31
78775-61M00	777A-32
78781-61M00	777A-24
78782-61M00	777A-25
78783-61M00	777A-26
78784-61M00	777A-27
78785-61M00	777A-28
78786-61M00	777A-29
78787-61M00	777A-30
	777A-33
78791-61M00	777A-34
78792-61M00	777A-35
78793-61M00	777A-36
78794-61M01-PLT	777A-37
78795-61M00	777A-38
78796-61M00	777A-39
78811-54P00	777A-41
78821-54P00	777A-43
78831-68L00	777A-44
78832-68L00	777A-46
78841-57L01	777A-45
	777A-47
78841-61M00	777A-48
78851-61M01	777A-49
78861-61M00	777A-50
78871-61M00	777A-51
78872-61M00	777A-52
79161-54P00	449A-14
	449B-15
	449C-15
79161-74S00	449A-15
	449B-16
	449C-16
79167-52R00	449A-11
	449B-11
	449C-11
79172-80G02	453A-15

PART NO.	FIG.NO.-REF.NO.
	453B-15
	453C-13
	453D-13
80000	
81632-61M00	810A-12
	810A-14
81730-54P01	810A-11
81740-54P01	810A-13
81770-54P00	811A-17
	811B-20
81780-54P00	811A-18
	811B-21
81810-86R00	800A-9
	800B-9
	800C-9
	800D-9
81830-86R00	801A-9
	801B-9
81850-54P02	805A-6-2
	805B-6-2
81850-86RV0	805A-6-1
	805B-6-1
81860-54P02	805A-7-2
	805B-7-2
81860-86RV0	805A-7-1
	805B-7-1
81871-54P00	805A-8
	805B-8
82110-54P21	570C-12
	570D-12
82110-54P31	570A-12
	570B-12
82160-54P00	570C-14
	570D-14
82160-54P10	570A-14
	570B-14
82191-50E00	570A-15
	570B-15
	570C-15
	570D-15
82201-54P21	820A-2
82201-54P31	820B-2
82201-54PA3	820C-2
	820D-2

PART NO.	FIG.NO.-REF.NO.
82202-54P01	820A-3
82202-54P11	820B-3
82202-54PB3	820C-3
	820D-3
82270-54861	360A-6
	360B-6
	820C-1
82270-54870	360C-4
	820D-1
82280-54841	360A-7
	360B-7
	820A-1
82280-54850	360C-5
	820B-1
82301-54P02	821A-1
82301-54PA4	821B-1
82302-54P02	821A-2
82302-54PA4	821B-2
82510-54P02	824A-1-2
82510-54P11	824A-1-1
82610-54P00	820A-5
	820B-5
	820C-5
	820D-5
	821A-4
	821B-4
82650-79J10	824A-3
82683-80E22	805A-9
	805B-9
82684-72M00	805A-10
	805B-10
82711-68H00	800A-12
	800B-12
	800C-12
	800D-12
	801A-12
	801B-12
82810-57830-26U	820B-7-10
	820D-7-10
82810-57830-ZCC	820B-7-1
	820D-7-1
82810-57830-ZCD	820B-7-2
	820D-7-2
82810-57830-ZCE	820B-7-3
	820D-7-3
82810-57830-ZCF	820B-7-4
	820D-7-4
82810-57830-ZNL	820B-7-5
	820D-7-5
82810-57830-ZQN	820B-7-6

PART NO.	FIG.NO.-REF.NO.
	820D-7-6
82810-57830-ZQQ	820B-7-7
	820D-7-7
82810-57830-ZZD	820B-7-8
	820D-7-8
82810-57830-ZZE	820B-7-9
	820D-7-9
82811-63J00	820A-10
	820C-10
82811-63J10	820B-10
	820D-10
82812-57LA0-26U	820A-7-11
	820C-7-11
	821A-6-11
	821B-6-11
82812-57LA0-ZCC	820A-7-2
	820C-7-2
	821A-6-2
	821B-6-2
82812-57LA0-ZCD	820A-7-3
	820C-7-3
	821A-6-3
	821B-6-3
82812-57LA0-ZCE	820A-7-4
	820C-7-4
	821A-6-4
	821B-6-4
82812-57LA0-ZCF	820A-7-5
	820C-7-5
	821A-6-5
	821B-6-5
82812-57LA0-ZNL	820A-7-6
	820C-7-6
	821A-6-6
	821B-6-6
82812-57LA0-ZQN	820A-7-7
	820C-7-7
	821A-6-7
	821B-6-7
82812-57LA0-ZQQ	820A-7-8
	820C-7-8
	821A-6-8
	821B-6-8
82812-57LA0-ZZD	820A-7-9
	820C-7-9
	821A-6-9
	821B-6-9
82812-57LA0-ZZE	820A-7-10
	820C-7-10
	821A-6-10

PART NO.	FIG.NO.-REF.NO.
	821B-6-10
82812-63J00-5PK	820A-7-1
	820C-7-1
	821A-6-1
	821B-6-1
82813-57L00-26U	820A-9-11
	820B-9-10
	820C-8-11
	820D-8-10
82813-57L00-ZCC	820A-9-2
	820B-9-1
	820C-8-2
	820D-8-1
82813-57L00-ZCD	820A-9-3
	820B-9-2
	820C-8-3
	820D-8-2
82813-57L00-ZCE	820A-9-4
	820B-9-3
	820C-8-4
	820D-8-3
82813-57L00-ZCF	820A-9-5
	820B-9-4
	820C-8-5
	820D-8-4
82813-57L00-ZNL	820A-9-6
	820B-9-5
	820C-8-6
	820D-8-5
82813-57L00-ZQN	820A-9-7
	820B-9-6
	820C-8-7
	820D-8-6
82813-57L00-ZQQ	820A-9-8
	820B-9-7
	820C-8-8
	820D-8-8
82813-57L00-ZZD	820A-9-9
	820B-9-8
	820C-8-9
	820D-8-8
82813-57L00-ZZE	820A-9-10
	820B-9-9
	820C-8-10
	820D-8-9
82813-57L10-26U	820A-8-11
	820B-8-10
	820C-9-11
	820D-9-10
82813-57L10-ZCC	820A-8-2

PART NO.	FIG.NO.-REF.NO.
	820B-8-1
	820C-9-2
	820D-9-1
82813-57L10-ZCD	820A-8-3
	820B-8-2
	820C-9-3
	820D-9-2
82813-57L10-ZCE	820A-8-4
	820B-8-3
	820C-9-4
	820D-9-3
82813-57L10-ZCF	820A-8-5
	820B-8-4
	820C-9-5
	820D-9-5
82813-57L10-ZNL	820A-8-6
	820B-8-5
	820C-9-6
	820D-9-6
82813-57L10-ZQQ	820A-8-8
	820B-8-7
	820C-9-8
	820D-9-7
82813-57L10-ZZD	820A-8-9
	820B-8-8
	820C-9-9
	820D-9-8
82813-57L10-ZZE	820A-8-10
	820B-8-9
	820C-9-10
	820D-9-9
82813-63J00-5PK	820A-9-1
	820C-8-1
82813-63J10-5PK	820A-8-1
	820C-9-1
82814-63J00	820A-12
	820B-12
	820C-12
	820D-12
82815-63J00	820A-13
	820B-13
	820C-13
	820D-13
	821A-10
	821B-10
82821-63J00	820A-11

PART NO.	FIG.NO.-REF.NO.
	820C-11
82821-63J10	820B-11
	820D-11
82831-63J40	821A-8
	821B-8
82833-57L00-26U	821A-7-11
	821B-7-11
82833-57L00-ZCC	821A-7-2
	821B-7-2
82833-57L00-ZCD	821A-7-3
	821B-7-3
82833-57L00-ZCE	821A-7-4
	821B-7-4
82833-57L00-ZCF	821A-7-5
	821B-7-5
82833-57L00-ZNL	821A-7-6
	821B-7-6
82833-57L00-ZQN	821A-7-7
	821B-7-7
82833-57L00-ZQQ	821A-7-8
	821B-7-8
82833-57L00-ZZD	821A-7-9
	821B-7-9
82833-57L00-ZZE	821A-7-10
	821B-7-10
82833-63J00-5PK	821A-7-1
	821B-7-1
82834-63J00	821A-11
	821B-11
82841-63J40	821A-9
	821B-9
82841-82G02	805A-11
	805B-11
82960-83E00-5PK	811A-6
82972-83E00-5PK	811A-8
83110-61M00-5PK	820A-16-1
	820C-16-1
	821A-12-1
	821B-12-1
83110-61M10-C48	820A-16-2
	820B-16
	820C-16-2
	820D-16
	821A-12-2
	821B-12-2
83130-61M00-5PK	820A-17-1
	820C-17-1
	821A-13-1
	821B-13-1
83130-61M10-C48	820A-17-2

PART NO.	FIG.NO.-REF.NO.
	820B-17
	820C-17-2
	820D-17
	821A-13-2
	821B-13-2
83271-71L00	820A-18
	820B-18
	820C-18
	820D-18
	821A-14
	821B-14
83310-76G32	755A-5
83401-54P02	810A-1-1
83401-54P12	810A-1-2
83402-54P02	810A-2-2
83402-54P12	810A-2-1
83501-54P10	811B-1
83502-54P10	811B-5
83510-54P00	811A-1
83510-54P10	811B-2
83530-61M00	811B-3
83540-54P00	811A-2
83540-54P10	811B-6
83560-61M00	811B-7
83630-79J01	811A-11
	811B-14
83640-79J01	811A-14
	811B-17
83661-54P01	810A-5
83665-54P01	810A-6
83671-54P02	811A-4
	811B-10
83675-54P02	811A-5
	811B-11
83691-63J00	811A-12
	811A-15
	811B-15
	811B-18
83710-54P40-C8B	800D-13-1
83710-54P40-C8K	800D-13-2
83710-54P50-C8B	800B-13-1
83710-54P50-C8K	800B-13-2
83710-54P70-ASJ	800A-13
83710-54P80-ASJ	800C-13
83720-54P40-C8B	800D-16-1
83720-54P40-C8K	800D-16-2
83720-54P50-C8B	800B-16-1
83720-54P50-C8K	800B-16-2
83720-54P60-ASJ	800C-16
83720-54P90-ASJ	800A-16

PART NO.	FIG.NO.-REF.NO.
83730-54P00-5PK	801A-13
83730-54P20-C8J	801B-13
83740-54P00-5PK	801A-16
83740-54P20-C8J	801B-16
83751-62K00	801A-25
	801B-25
83751-75HA0	800A-28
	800B-28
	800C-28
	800D-28
83752-79J00-5PK	800A-14
	800A-17
	800B-14
	800B-17
	800C-14
	800C-17
	800D-14
	800D-17
	801A-14
	801A-17
	801B-14
	801B-17
83755-68L00-5PK	800A-19
	800B-19
	800C-19
	800D-19
	801A-19
	801B-19
83756-62K00	801A-26
	801B-26
83756-68L00-5PK	800A-20
	800B-20
	800C-20
	800D-20
	801A-20
	801B-20
83756-75HA0	800A-29
	800B-29
	800C-29
	800D-29
83770-86R00-5PK	805A-12
	805B-12
83811-54P00	810A-7
83821-54P00	810A-8
83831-54P00	811A-9
	811B-12
83841-54P00	811A-10
	811B-13
83851-54P00	800A-26
	800B-26

PART NO.	FIG.NO.-REF.NO.
	800C-26
	800D-26
83861-54P00	800A-27
	800B-27
	800C-27
	800D-27
83871-54P00	801A-23
	801B-23
83881-54P00	801A-24
	801B-24
83911-54P00	800A-43
	800B-43
	800C-43
	800D-43
83913-54P00	801A-44
	801B-44
83921-82C00	640A-5
	640A-27
	640B-5
	640B-27
83925-54P10-0CE	800A-44
	800B-44-1
	800B-44-2
	800C-44
	800D-44-1
	800D-44-2
83926-54P10-0CE	800A-45
	800B-45-1
	800B-45-2
	800C-45
	800D-45-1
	800D-45-2
83935-54P10-0CE	801A-45
	801B-45-1
	801B-45-2
83936-54P10-0CE	801A-46
	801B-46-1
	801B-46-2
83940-54P01-26U	805A-17-10
83940-54P01-ZCC	805A-17-1
83940-54P01-ZCD	805A-17-2
83940-54P01-ZCE	805A-17-3
83940-54P01-ZCF	805A-17-4
83940-54P01-ZNL	805A-17-5
83940-54P01-ZQN	805A-17-6
83940-54P01-ZQQ	805A-17-7
83940-54P01-ZZD	805A-17-8
83940-54P01-ZZE	805A-17-9
83940-54P11-26U	805A-17-20
83940-54P11-ZCC	805A-17-11

PART NO.	FIG.NO.-REF.NO.
83940-54P11-ZCD	805A-17-12
83940-54P11-ZCE	805A-17-13
83940-54P11-ZCF	805A-17-14
83940-54P11-ZNL	805A-17-15
83940-54P11-ZQN	805A-17-16
83940-54P11-ZQQ	805A-17-17
83940-54P11-ZZD	805A-17-18
83940-54P11-ZZE	805A-17-19
83940-54P21-26U	805B-17-10
83940-54P21-ZCC	805B-17-1
83940-54P21-ZCD	805B-17-2
83940-54P21-ZCE	805B-17-3
83940-54P21-ZCF	805B-17-4
83940-54P21-ZNL	805B-17-5
83940-54P21-ZQN	805B-17-6
83940-54P21-ZQQ	805B-17-7
83940-54P21-ZZD	805B-17-8
83940-54P21-ZZE	805B-17-9
83940-54P31-26U	805B-17-20
83940-54P31-ZCC	805B-17-11
83940-54P31-ZCD	805B-17-12
83940-54P31-ZCE	805B-17-13
83940-54P31-ZCF	805B-17-14
83940-54P31-ZNL	805B-17-15
83940-54P31-ZQN	805B-17-16
83940-54P31-ZQQ	805B-17-17
83940-54P31-ZZD	805B-17-18
83940-54P31-ZZE	805B-17-19
83942-79J00	805A-20
	805B-20
83943-61M02	805B-21
83944-80J00	805A-21
	805B-22
83945-54P01	805A-22
	805B-23
83946-54P00	805A-23
	805B-24
83950-54P02-5PK	805A-26
	805B-27
83970-54P02	801A-47
	801B-47
83971-54F00	750A-47
83972-54P00	801A-48
	801A-55
	801B-48
	801B-55
83973-54P00	801A-49
	801A-56
	801B-49
	801B-56

PART NO.	FIG.NO.-REF.NO.
83979-54P00	801A-50
	801B-50
83980-54P02	801A-54
	801B-54
83989-54P00	801A-57
	801B-57
83990-86R00	805A-27
	805B-28
84501-54P03	810A-9
84502-54P03	810A-10
84510-54P01	790A-1-1
84510-54P11	790A-1-2
84510-86R00	790C-1-1
84510-86R10	790C-1-2
84510-86R20	790B-1-1
84510-86R30	790B-1-2
84512-79M00	790A-2
	790B-2
	790C-2
84513-76F00	790A-8
	790A-12
	790B-8
	790B-12
	790C-8
	790C-12
	805A-33
	805B-34
84514-65D00	790A-6
	790B-6
	790C-6
84515-65D00	805A-29
	805B-30
84541-54P01	811A-13
	811B-16-1
84541-54P11	811B-16-2
84546-54P01	811A-16
	811B-19-1
84546-54P11	811B-19-2
84570-54P01	805A-32-1
	805B-33-1
84570-54P11	805A-32-2
	805B-33-2
84572-71L00	805A-34
	805B-35
84575-54P00	805A-35
	805B-36
84580-54P01	790A-7-1
	790B-7-1
	790C-7-1
84580-54P11	790A-7-2

PART NO.	FIG.NO.-REF.NO.
	790B-7-2
	790C-7-2
84582-54P00	790A-9
	790B-9
	790C-9
84584-73H00	790A-10
	790A-14
	790B-10
	790B-13
	790C-10
	790C-13
84590-54P01	790A-11-1
	790B-11-1
	790C-11-1
84590-54P11	790A-11-2
	790B-11-2
	790C-11-2
84592-54P00	790A-13
	790B-14
	790C-14
84611-54P01	790A-3
	790B-3
	790C-3
84617-58J00	790A-4
	790B-4
	790C-4
84617-76F00	790A-5
	790B-5
	790C-5
84641-54P10	800A-32
	800B-32
	800C-32
	800D-32
84651-54P10	800A-33
	800B-33
	800C-33
	800D-33
84661-54P01	801A-29
	801B-29
84671-54P01	801A-30
	801B-30
84681-61M15	805A-36
	805B-37
84701-54P01-26U	835E-1-8
84701-54P01-ZCC	835E-1-2
84701-54P01-ZCD	835E-1-3
84701-54P01-ZCE	835E-1-4
84701-54P01-ZCF	835E-1-5
84701-54P01-ZNL	835E-1-6
84701-54P01-ZQN	835E-1-7

PART NO.	FIG.NO.-REF.NO.
84701-54P11-26U	835B-1-8
84701-54P11-ZCC	835B-1-2
84701-54P11-ZCD	835B-1-3
84701-54P11-ZCE	835B-1-4
84701-54P11-ZCF	835B-1-5
84701-54P11-ZNL	835B-1-6
84701-54P11-ZQN	835B-1-7
84701-54P81	835D-1-1
	835E-1-1
84701-54P91	835A-1-1
	835B-1-1
84701-54PA1-26U	835E-1-16
84701-54PA1-ZCC	835E-1-10
84701-54PA1-ZCD	835E-1-11
84701-54PA1-ZCE	835E-1-12
84701-54PA1-ZCF	835E-1-13
84701-54PA1-ZNL	835E-1-14
84701-54PA1-ZQN	835E-1-15
84701-54PB1-26U	835B-1-16
84701-54PB1-ZCC	835B-1-10
84701-54PB1-ZCD	835B-1-11
84701-54PB1-ZCE	835B-1-12
84701-54PB1-ZCF	835B-1-13
84701-54PB1-ZNL	835B-1-14
84701-54PB1-ZQN	835B-1-15
84701-54PJ1	835D-1-2
	835E-1-9
84701-54PK1	835A-1-2
	835B-1-9
84701-54PL0-26U	835F-1-7
84701-54PL0-ZCC	835F-1-1
84701-54PL0-ZCD	835F-1-2
84701-54PL0-ZCE	835F-1-3
84701-54PL0-ZCF	835F-1-4
84701-54PL0-ZNL	835F-1-5
84701-54PL0-ZQN	835F-1-6
84701-54PM0-26U	835C-1-7
84701-54PM0-ZCC	835C-1-1
84701-54PM0-ZCD	835C-1-2
84701-54PM0-ZCE	835C-1-3
84701-54PM0-ZCF	835C-1-4
84701-54PM0-ZNL	835C-1-5
84701-54PM0-ZQN	835C-1-6
84701-54PN0-26U	835G-1-14
84701-54PN0-ZCC	835G-1-8
84701-54PN0-ZCD	835G-1-9
84701-54PN0-ZCE	835G-1-10
84701-54PN0-ZCF	835G-1-11
84701-54PN0-ZNL	835G-1-12
84701-54PN0-ZQN	835G-1-13

PART NO.	FIG.NO.-REF.NO.
84701-54PP0-26U	835G-1-7
84701-54PP0-ZCC	835G-1-1
84701-54PP0-ZCD	835G-1-2
84701-54PP0-ZCE	835G-1-3
84701-54PP0-ZCF	835G-1-4
84701-54PP0-ZNL	835G-1-5
84701-54PP0-ZQN	835G-1-6
84702-54P01-26U	835E-4-8
84702-54P01-ZCC	835E-4-2
84702-54P01-ZCD	835E-4-3
84702-54P01-ZCE	835E-4-4
84702-54P01-ZCF	835E-4-5
84702-54P01-ZNL	835E-4-6
84702-54P01-ZQN	835E-4-7
84702-54P11-26U	835B-4-8
84702-54P11-ZCC	835B-4-2
84702-54P11-ZCD	835B-4-3
84702-54P11-ZCE	835B-4-4
84702-54P11-ZCF	835B-4-5
84702-54P11-ZNL	835B-4-6
84702-54P11-ZQN	835B-4-7
84702-54P81	835D-4-1
	835E-4-1
84702-54P91	835A-4-1
	835B-4-1
84702-54PA1-26U	835E-4-16
84702-54PA1-ZCC	835E-4-10
84702-54PA1-ZCD	835E-4-11
84702-54PA1-ZCE	835E-4-12
84702-54PA1-ZCF	835E-4-13
84702-54PA1-ZNL	835E-4-14
84702-54PA1-ZQN	835E-4-15
84702-54PB1-26U	835B-4-16
84702-54PB1-ZCC	835B-4-10
84702-54PB1-ZCD	835B-4-11
84702-54PB1-ZCE	835B-4-12
84702-54PB1-ZCF	835B-4-13
84702-54PB1-ZNL	835B-4-14
84702-54PB1-ZQN	835B-4-15
84702-54PJ1	835D-4-2
	835E-4-9
84702-54PK1	835A-4-2
	835B-4-9
84702-54PL0-26U	835F-4-7
84702-54PL0-ZCC	835F-4-1
84702-54PL0-ZCD	835F-4-2
84702-54PL0-ZCE	835F-4-3
84702-54PL0-ZCF	835F-4-4
84702-54PL0-ZNL	835F-4-5
84702-54PL0-ZQN	835F-4-6

PART NO.	FIG.NO.-REF.NO.
84702-54PM0-26U	835C-4-7
84702-54PM0-ZCC	835C-4-1
84702-54PM0-ZCD	835C-4-2
84702-54PM0-ZCE	835C-4-3
84702-54PM0-ZCF	835C-4-4
84702-54PM0-ZNL	835C-4-5
84702-54PM0-ZQN	835C-4-6
84702-54PN0-26U	835G-6-14
84702-54PN0-ZCC	835G-6-8
84702-54PN0-ZCD	835G-6-9
84702-54PN0-ZCE	835G-6-10
84702-54PN0-ZCF	835G-6-11
84702-54PN0-ZNL	835G-6-12
84702-54PN0-ZQN	835G-6-13
84702-54PP0-26U	835G-6-7
84702-54PP0-ZCC	835G-6-1
84702-54PP0-ZCD	835G-6-2
84702-54PP0-ZCE	835G-6-3
84702-54PP0-ZCF	835G-6-4
84702-54PP0-ZNL	835G-6-5
84702-54PP0-ZQN	835G-6-6
84703-71L00	835A-8
	835B-8
	835C-8
	835D-8
	835E-8
	835F-8
	835G-12
84717-60P00	835G-3
	835G-8
84718-61M00-5PK	835A-3
	835B-3-1
	835D-3
	835E-3-1
84718-61M10-26U	835B-3-8
	835C-3-7
	835E-3-8
	835F-3-7
84718-61M10-ZCC	835B-3-2
	835C-3-1
	835E-3-2
	835F-3-1
84718-61M10-ZCD	835B-3-3
	835C-3-2
	835E-3-3
	835F-3-2
84718-61M10-ZCE	835B-3-4
	835C-3-3
	835E-3-4
	835F-3-3

PART NO.	FIG.NO.-REF.NO.
84718-61M10-ZCF	835B-3-5
	835C-3-4
	835E-3-5
	835F-3-4
84718-61M10-ZNL	835B-3-6
	835C-3-5
	835E-3-6
	835F-3-5
84718-61M10-ZQN	835B-3-7
	835C-3-6
	835E-3-7
	835F-3-6
84718-61M20-26U	835G-5-7
84718-61M20-ZCC	835G-5-1
84718-61M20-ZCD	835G-5-2
84718-61M20-ZCE	835G-5-3
84718-61M20-ZCF	835G-5-4
84718-61M20-ZNL	835G-5-5
84718-61M20-ZQN	835G-5-6
84728-61M00-5PK	835A-6
	835B-6-1
	835D-6
	835E-6-1
84728-61M10-26U	835B-6-8
	835C-6-7
	835E-6-8
	835F-6-7
84728-61M10-ZCC	835B-6-2
	835C-6-1
	835E-6-2
	835F-6-1
84728-61M10-ZCD	835B-6-3
	835C-6-2
	835E-6-3
	835F-6-2
84728-61M10-ZCE	835B-6-4
	835C-6-3
	835E-6-4
	835F-6-3
84728-61M10-ZCF	835B-6-5
	835C-6-4
	835E-6-5
	835F-6-4
84728-61M10-ZNL	835B-6-6
	835C-6-5
	835E-6-6
	835F-6-5
84728-61M10-ZQN	835B-6-7
	835C-6-6
	835E-6-7

PART NO.	FIG.NO.-REF.NO.
	835F-6-6
84728-61M20-26U	835G-10-7
84728-61M20-ZCC	835G-10-1
84728-61M20-ZCD	835G-10-2
84728-61M20-ZCE	835G-10-3
84728-61M20-ZCF	835G-10-4
84728-61M20-ZNL	835G-10-5
84728-61M20-ZQN	835G-10-6
84730-61M00	835A-2-1
	835B-2-1
	835D-2-1
	835E-2-1
84730-61M20	835D-2-2
	835E-2-2
84730-61M50	835A-2-2
	835B-2-2
84730-86R00	835F-2
	835G-4-2
84730-86R20	835C-2
	835G-4-1
84740-61M00	835A-5-1
	835B-5-1
	835D-5-1
	835E-5-1
84740-61M20	835A-5-2
	835B-5-2
84740-61M50	835D-5-2
	835E-5-2
84740-86R10	835C-5
	835G-9-1
84740-86R40	835F-5
	835G-9-2
84750-54P00-5PK	800A-22
	800B-22-1
	800C-22
	800D-22-1
84750-54P10-5PK	800B-22-2
	800D-22-2
84761-50X50	350A-20
	350B-20
	350C-20
	350D-20
	350E-20
	350F-20
	350G-20
	350H-20
84790-54P00-5PK	800A-24
	800B-24-1
	800C-24
	800D-24-1

PART NO.	FIG.NO.-REF.NO.
84790-54P10-5PK	800B-24-2
	800D-24-2
84801-54P42-6GS	835B-9
	835C-9
	835G-13-1
84801-54P52-6GS	835E-9
	835F-9
	835G-13-2
84801-61M20-6GS	835A-9
84801-61M30-6GS	835D-9
84802-54P42-6GS	835B-12
	835C-12
	835G-16-1
84802-54P52-6GS	835E-12
	835F-12
	835G-16-2
84802-61M20-6GS	835A-10
84802-61M30-6GS	835D-10
84841-61M00	835B-10
	835B-13
	835C-10
	835C-13
	835E-10
	835E-13
	835F-10
	835F-13
	835G-14
	835G-17
84842-61M00	835B-11
	835B-14
	835C-11
	835C-14
	835E-11
	835E-14
	835F-11
	835F-14
	835G-15
	835G-18
84851-85K00-6GS	835A-11
	835B-15
	835C-15
	835D-11
	835E-15
	835F-15
	835G-19
84910-54P00	840A-1-3
	840A-3-1
84910-54P10	840A-1-1
	840A-3-3
84910-54P30	840A-1-4

PART NO.	FIG.NO.-REF.NO.
	840A-3-2
84910-54P40	840A-1-2
	840A-3-4
84920-54P11-BHE	840A-2
84926-54P00	840A-16
84927-54P00	840A-17
84940-54P11-BHE	840A-4
84950-54P01-5PK	840A-10
84960-54PA1-5PK	840A-11
84970-54P01-5PK	840A-12
84975-54P11-5PK	840A-13
84980-54PA1-5PK	840A-14
84985-54P01-5PK	840A-15
84990-79K00-6GS	840A-5
84991-79K00-6GS	840A-6
84993-54P00	840A-18
84994-54P00	840A-19
84996-65DA0	370A-3
	370B-3
85101-54PC1-EAR	849A-1-5
85101-54PD2-EAR	849A-1-6
85101-61M31-BAE	849A-1-1
85101-61M31-BAN	849A-1-2
85101-61M63-BAE	849A-1-3
85101-61M63-BAN	849A-1-4
85101-74S20-BAE	849B-1-1
85101-74S20-BAN	849B-1-2
85101-74S30-BAE	849B-1-3
85101-74S30-BAN	849B-1-4
85101-74SC1-EAR	849B-1-5
85101-74SD1-EAR	849B-1-6
85102-54PC1-EAR	848C-1-3
85102-61M31-BAE	848C-1-1
85102-61M31-BAN	848C-1-2
85102-74S20-BAE	848D-1-1
85102-74S20-BAN	848D-1-2
85102-74SC1-EAR	848D-1-3
85103-61M00	849C-1
85103-74S00	849D-1
85137-51K00	848A-8-1
	848A-8-2
	848A-8-3
	848B-8
	848C-4
	848D-4
	849A-4-1
	849A-4-2
	849B-4
	849C-7
	849D-7

PART NO.	FIG.NO.-REF.NO.
85137-68L00	848A-9
	848B-9
	848C-5
	848D-5
	849A-5
	849B-5
	849C-8
	849D-8
85138-51K00	848B-10
	848D-6
	849B-6
	849D-9
85139-74S00	848B-11
	848D-7
	849B-7
	849D-10
85160-61M01	848A-1
	848B-1
	849C-2
	849D-2
85170-61M10	848A-2
	848B-2
85180-54PA1-EAR	849C-3-3
85180-61M00-BAE	849C-3-1
85180-61M00-BAN	849C-3-2
85180-74S00-BAE	849D-3-1
85180-74S00-BAN	849D-3-2
85180-74SA1-EAR	849D-3-3
85211-65JA0-5PK	849A-6
	849B-8
	849C-9
	849D-11
85213-65J00-5PK	849A-7
	849B-9
	849C-10
	849D-12
85214-63J20-5PK	848A-10
	848B-12
	848C-6
	848D-8
	849A-8
	849B-10
	849C-11
	849D-13
85221-68L10-5PK	849A-9
	849B-11
	849C-12
	849D-14
85241-68L00-5PK	849A-10
	849B-12

PART NO.	FIG.NO.-REF.NO.
	849C-13
	849D-15
85243-61M00-5PK	849A-11
	849B-13
	849C-14
	849D-16
85244-61M00-5PK	849A-12
	849B-14
	849C-15
	849D-17
85295-51K00	848A-11
	848B-13
	848C-7
	848D-9
	849A-13
	849B-15
	849C-16
	849D-18
	850A-4
	850A-20
85303-61MA0	849A-14
	849B-16
	849C-17
	849D-19
85341-63J12-P4Z	848A-12
	848B-14
	848C-8
	848D-10
	849A-15
	849B-17
	849C-18
	849D-20
	850A-5
	850A-21
85350-54P00	849A-16
	849B-18
	849C-19
	849D-21
85352-68L00	848A-13
	848B-15
	848C-9
	848D-11
	849A-17
	849B-19
	849C-20
	849D-22
85354-59JC1	848A-34
	848B-36
	848C-29
	848D-31

PART NO.	FIG.NO.-REF.NO.
	849A-30
	849B-32
	849C-32
	849D-34
85355-61M00	848A-14
	848C-10
	849A-18
	849C-21
85355-74S00	848B-16
	848D-12
	849B-20
	849D-23
85359-68L00	848A-15
	848B-17
	848C-11
	848D-13
	849A-19
	849B-21
	849C-22
	849D-24
85360-54PA0	849A-20
	849B-22
	849C-23
	849D-25
85370-61M10	848A-16
	849A-21
85370-61M20	848B-18
	849B-23
85380-54PA1-BAE	849C-24-1
	849D-26-1
85380-54PA1-BAN	849C-24-2
	849D-26-2
85380-54PB1-BAE	849A-22-1
	849B-24-1
85380-54PB1-BAN	849A-22-2
	849B-24-2
85380-54PK1-EAR	849C-24-3
	849D-26-3
85380-54PL1-EAR	849A-22-3
	849B-24-3
85603-61M00	848A-3
85603-74S00	848B-3
85680-54PA1-EAR	848A-4-3
85680-61M00-BAE	848A-4-1
85680-61M00-BAN	848A-4-2
85680-74S00-BAE	848B-4-1
85680-74S00-BAN	848B-4-2
85680-74SA1-EAR	848B-4-3
85711-65JA0-5PK	848A-23
	848B-25

PART NO.	FIG.NO.-REF.NO.
	848C-18
	848D-20
85713-65J00-5PK	848A-24
	848B-26
	848C-19
	848D-21
85721-68L10-5PK	848A-25
	848B-27
	848C-20
	848D-22
85741-68L00-5PK	848A-26
	848B-28
	848C-21
	848D-23
85743-61M00-5PK	848A-27
	848B-29
	848C-22
	848D-24
85744-61M00-5PK	848A-28
	848B-30
	848C-23
	848D-25
85803-61MA0	848A-17
	848B-19
	848C-12
	848D-14
85840-63J12-P4Z	848A-18
	848B-20
	848C-13
	848D-15
	849A-23
	849B-25
	849C-25
	849D-27
	850A-6
	850A-22
85850-54P00	848A-19
	848B-21
	848C-14
	848D-16
85860-54PA0	848A-20
	848B-22
	848C-15
	848D-17
85880-54PA1-BAE	848A-21-1
	848B-23-1
85880-54PA1-BAN	848A-21-2
	848B-23-2
85880-54PB1-BAE	848C-16-1
	848D-18-1

PART NO.	FIG.NO.-REF.NO.
85880-54PB1-BAN	848C-16-2
	848D-18-2
85880-54PK1-EAR	848A-21-3
	848B-23-3
85880-54PL1-EAR	848C-16-3
	848D-18-3
86401-54P10-PET	850A-7-1
	850A-23-1
86401-54PB0-ANT	850A-7-2
	850A-23-2
86401-61M00-AN4	848A-29-1
	848B-31-1
	848C-24-1
	848D-26-1
	849A-25-1
	849B-27-1
	849C-27-1
	849D-29-1
86401-61M00-PET	848A-29-2
	848B-31-2
	848C-24-2
	848D-26-2
	849A-25-2
	849B-27-2
	849C-27-2
	849D-29-2
86401-61M20-PET	850A-24-1
86401-61MA0-ANT	848A-29-3
	848B-31-3
	848C-24-3
	848D-26-3
	849A-25-3
	849B-27-3
	849C-27-3
	849D-29-3
86401-61MC0-ANT	850A-24-2
86652-68L00	848A-5
	848B-5
	848C-2
	848D-2
	849A-2
	849B-2
	849C-4
	849D-4
86654-68L00	848A-6
	848B-6
	848C-3
	848D-3
	849A-3
	849B-3

PART NO.	FIG.NO.-REF.NO.
	849C-5
	849D-5
87160-54P02	850A-1
87180-54P01-BAM	850A-2-1
87180-54P01-BAP	850A-2-2
87180-54PA1-C7Z	850A-2-3
87225-61M00-5PK	850A-25
87225-68L10-5PK	850A-8
	850A-26
87228-54P00	850A-38
87260-54P00	850A-39
87310-61M00	850A-9
87360-61M00	850A-10
87380-54PA1-C7Z	850A-11-3
87380-61M00-BAM	850A-11-1
87380-61M00-BAP	850A-11-2
87460-76G01	850A-40
87470-54P00	850A-41
87480-62J20	850A-12
87481-61M30-5PK	850A-13
87482-61M30-5PK	850A-14
87485-61M00	850A-15
87486-61M00-5PK	850A-16
87487-61M00-5PK	850A-17
	850A-27
87810-61M00	850A-28
87860-61M00	850A-29
87870-54P00	850A-42
87880-54PA1-C7Z	850A-30-3
87880-61M00-BAM	850A-30-1
87880-61M00-BAP	850A-30-2
87910-54P00	850A-43
87912-54P00	850A-44
87950-54P00	850A-45
87980-62J20	850A-31
87981-61M30-5PK	850A-32
87982-61M30-5PK	850A-33
87985-61M00	850A-34
87986-61M00-5PK	850A-35
88910-86R10-R3F	860A-1
88913-54P00	860A-2
88917-54P00	860A-3
88919-79J00	860A-4
89101-61MA0	865A-1
89101-61ME0	865B-1
89185-68L00	865A-2
	865B-2
89191-68L00	865A-3
	865B-3
89192-62J00	865A-4

PART NO.	FIG.NO.-REF.NO.
	865B-4
89210-61MA0	865A-12
89210-61ME0	865B-12
89232-57L00	865A-13
	865B-13
89241-61M00	865B-14
89241-61M10	865A-14
89242-56S00	865B-15
89242-80J00	865A-15
89243-68L00	865A-16
	865B-16
89260-77K01	865A-17
	865B-17
89267-77K00	865A-18
	865B-18
89285-54P00	865A-19
	865B-19
89291-54P00	865A-20
89291-68P10	865B-20
89311-61M00	865A-5
	865B-5
89315-62J00	865A-6
	865B-6
89360-79J00	865A-7
	865B-7
89370-79J00	865A-8
	865B-8
89385-61M01	865A-9
	865B-9
89386-61M00	865A-10
	865B-10
89913-55LV1	893A-1
89921-83E00	893A-2
89969-86R00	893A-3
90000	
91480-74S00	351C-43
	351F-44
91880-74S00	318A-3
918B0-74S00	318A-1
918B1-74S00	318A-2
94135-82000	732A-41
	732B-41
	732C-37
	732D-41
	732E-41

PART NO.	FIG.NO.-REF.NO.
	732F-37
95141-54PB0	952A-1
	952B-1
	952C-1
	952D-1
95200-54PA0	952A-2
	952B-2
	990A-1
95200-54PB0	952C-2
	952D-2
	990B-1
95200-74S00	952E-2
	952F-2
	990C-1
95210-54PA0	990A-2
95210-54PB0	990B-2
95271-68KA1	990A-3
	990B-3
95271-76M00	990C-2
95291-54PA0	990A-4
95291-54PB0	990B-4
95291-74S00	990C-3
95298-60MA0	990A-5
	990B-5
95310-62M10	952A-4
	952B-4
	952C-4
	952D-4
	952E-4
	952F-4
95339-61M10	952A-5
	952B-5
	952C-5
	952D-5
	952E-5
	952F-5
95340-55P01	952A-6
	952B-6
	952C-6
	952D-6
95343-55P01	952A-7
	952B-7
	952C-7
	952D-7
95344-55P00	952A-8
	952B-8
	952C-8
	952D-8
95411-61M01	732E-42
	732F-38

PART NO.	FIG.NO.-REF.NO.
95411-61M11	732B-42
	732C-38
95431-61M20	732B-43
	732C-39
	732E-43
	732F-39
95452-63J00	732B-44
	732C-40
	732E-44
	732F-40
95481-61M00	732B-50
	732C-49
	732E-50
	732F-49
95541-61M00	732B-45
	732C-41
	732E-45
	732F-41
95569-78040	130A-15
	158B-30
95626-61M00	732C-42
	732F-42
95640-54P00	952B-13
	952D-13
	952F-8
95640-54P10	952A-13
	952C-13
	952E-8
95642-64G20	952A-14
	952B-14
	952C-14
	952D-14
	952E-9
	952F-9
95643-51K00	350A-16
	350B-16
	350C-16
	350D-16
	350E-16
	350F-16
	350G-16
	350H-16
95651-61M00	732C-43
	732F-43
95652-61M00	732C-44
	732F-44
95654-61M00	732C-45
	732F-45
95655-61M00	732A-42
	732B-46

PART NO.	FIG.NO.-REF.NO.
	732D-42
	732E-46
95710-54PA0	952A-16
	952B-16
95710-54PB1	952C-16
	952D-16
95710-74S00	952E-11
	952F-11
95720-54PA0	952A-18
	952B-18
95720-54PB0	952C-18
	952D-18
95720-74S00	952E-13
	952F-13
95731-54PB0	952A-20
	952B-20
	952C-20
	952D-20
95731-74S00	952E-15
	952F-15
95746-61M10	952B-22
	952D-22
95746-61M30	952A-22
	952C-22
95746-74S00	952E-17
	952F-17
95761-64A00	590A-67
	590C-67
95781-61M00	952A-25
	952B-25
	952C-25
	952D-25
95860-61M00	732A-43
	732B-47
	732C-46
	732E-47
	732F-46
95861-61M00	732C-47
	732F-47
95861-61M10	732A-44
	732B-48
	732D-43
	732E-48
95891-50G00	952A-21
	952A-23
	952B-21
	952B-23
	952C-21
	952C-23
	952D-21

PART NO.	FIG.NO.-REF.NO.
	952D-23
	952E-16
	952E-18
	952F-16
	952F-18
95895-50G00	952A-19
	952B-19
	952C-19
	952D-19
	952E-14
	952F-14
95896-50G00	952A-17
	952A-24
	952B-17
	952B-24
	952C-17
	952C-24
	952D-17
	952D-24
	952E-12
	952E-19
	952F-12
	952F-19
95955-61M00	952A-30
	952B-30
	952C-30
	952D-30
	952E-23
	952F-23
96160-74S00	300B-16
96162-74S00	300B-17
96460-74S00	318A-4
96520-74SV0	320C-33
96691-74S00	320C-34
96730-74S00	320C-35
96741-74S00	320C-36
96742-74S00	320C-37
96743-74S00	320C-38
96761-74S00	320C-39
99611-60A01	741A-7
	741B-7

00000

PART NO.	FIG.NO.-REF.NO.
01421-0650A	142A-3
	142B-2
01421-0820A	18PA-6
01421-0825A	188A-36
	188B-42
01421-0835A	180A-3
	180B-3
01421-0840A	188A-37
	188B-43
	18PA-7
01421-1045A	206A-23
	206B-14
	240A-41
01547-0635A	111A-21
	111B-21
	111C-19
01550-0610A	952A-26
	952A-27
	952B-26
	952B-27
	952C-26
	952C-27
	952D-26
	952D-27
01550-0612A	112C-13
	115A-10
	115B-10
	115C-10
	150A-29
	150B-15
	154B-15
	154C-23
	172A-18
	176A-15
	176B-15
	176C-9
	188A-21
	188A-22
	188B-25
	188B-26
	188C-31
	190C-3
	190D-21
	190E-3
	190F-20
	190G-18
	208B-43
	248A-11
	248B-10
	320B-12

PART NO.	FIG.NO.-REF.NO.
	320C-12
	320C-41
	348A-4
	348A-7
	348A-11
	348A-13
	348B-6
	348B-8
	348C-5
	348D-9
	348D-11
	348D-13
	348E-6
	34NA-29
	34NB-29
	34NC-26
	34ND-29
	34NE-29
	34NF-26
	34NG-29
	34NH-29
	453A-6
	453A-17
	453B-6
	453B-17
	453C-15
	453D-15
	510A-7
	570A-4
	570A-8
	570B-4
	570B-8
	570C-4
	570C-8
	570D-4
	570D-8
	580A-3
	580B-3
	590A-11
	590A-52
	590A-53
	590A-54
	590A-58
	590B-11
	590B-52
	590B-53
	590B-54
	590B-58
	590C-11
	590C-52

PART NO.	FIG.NO.-REF.NO.
	590C-53
	590C-54
	590C-58
	590D-11
	590D-52
	590D-53
	590D-54
	590D-58
	600A-59
	600B-64
	600C-60
	600D-65
	640A-70
	640B-70
	660A-9
	660A-10
	660A-11
	660B-5
	660B-6
	660B-7
	772B-15
	952E-20
	952E-21
	952F-20
	952F-21
01550-0612C	153A-13
	154A-15
	154B-6
	154C-10
	154D-7
	154D-18
	158C-16
	188C-32
	188C-33
	188C-34
	188C-46
	188C-47
	188C-48
	192A-11
	240A-43
	320B-10
	320C-10
	320C-28
	320C-30
	320C-32
	348A-9
	348C-7
	348C-9
	348D-4
	348D-6

PART NO.	FIG.NO.-REF.NO.
	348E-8
	348E-10
	34NA-24
	34NB-24
	34NC-23
	34ND-24
	34NE-24
	34NF-23
	34NG-24
	34NH-24
01550-0616A	112A-14
	112B-14
	112C-14
	124B-14
	124C-15
	130A-20
	142A-4
	150A-18
	150C-8
	153A-14
	153A-15
	158A-18
	158B-17
	158C-17
	159B-18
	172B-17
	172C-13
	300A-14
	300B-10
	348B-2
	348B-3
	348C-2
	348E-2
	348E-3
	351C-44
	351F-45
01550-0616C	130B-13
	142C-4
	153A-21
	159B-22
	172A-8
	320C-26
	348A-5
	348C-3
	348D-7
01550-0620A	112A-15
	112B-15
	112C-15
	112C-18
	124A-13

PART NO.	FIG.NO.-REF.NO.
	124B-15
	124C-16
	153A-16
	159A-13
	18PA-8
	202A-14
	202B-15
	202C-16
	202D-16
01550-0620C	154D-19
	159A-15
	952A-28
	952B-28
	952C-28
	952D-28
	952E-22
	952F-22
01550-0625A	158A-31
	158B-37
	159C-15
01550-0625C	115A-11
	115B-11
	115C-11
	188A-38
	188B-44
01550-0630C	153A-17
01550-0640A	158A-32
01550-0645C	192A-12
01550-0650A	142A-5
	142B-4
	159B-19
01550-0660A	158A-33
01550-0665C	142C-5
01550-0685A	158B-21
01550-0812A	158B-22
	202C-17
	202D-17
	320A-11
	320C-42
	320D-10
	320D-14
	348A-2
01550-0812C	260C-6
01550-0816A	154A-16
	154C-24
	172B-18
	172C-14
	206B-20
	717A-40
	717B-39

PART NO.	FIG.NO.-REF.NO.
	717C-36
	717D-40
	717E-40
01550-0816C	154A-17
	260C-7
01550-0820A	206A-22
01550-0820C	120C-30
	154A-18
	154C-11
	154D-8
	156A-10
	192A-13
01550-0825A	124C-18
	188A-43
	188B-49
	194A-3
	208A-13
	208B-40
01550-0830A	180C-6
01550-0830C	176A-16
	176B-16
	176C-10
	180A-2
	180B-2
01550-0835A	112A-20
	112B-20
	130A-5
	130B-5
	130C-6
	172A-9
	172B-7
	300B-5
	850A-19
	850A-37
01550-0835C	288A-10
	288B-10
01550-0840A	180C-7
	206A-9
	206B-21
01550-0845A	318A-7
01550-0850A	952A-3
	952B-3
01550-0855C	282A-28
	282B-28
	298A-26
01550-0870A	176C-11
	188A-44
	188B-50
	194A-4
01550-0880A	111A-17

PART NO.	FIG.NO.-REF.NO.
	952C-3
	952D-3
01550-0890A	176A-17
	176B-17
01550-0890C	282A-29
	282B-29
01550-1016A	848A-31
	848B-33
	848C-26
	848D-28
	849A-27
	849B-29
	849C-29
	849D-31
01550-1020A	128A-8
	128B-8
	128C-9
	128D-9
	128E-9
	154B-10
01550-1020C	240A-44
01550-1025C	128A-21
	128B-21
	128C-19
	128D-19
	128E-19
01550-1030A	300B-2
01550-1035A	120C-31
01550-1035C	128A-9
	128B-9
	128C-10
	128D-10
	128E-10
	298A-5
	298A-6
	298A-27
01550-1040A	128A-10
	128B-10
01550-1040C	128A-11
	128B-11
	128C-11
	128D-11
	128E-11
01550-1045A	172C-15
01550-1050A	206A-24
	206A-25
	206B-22
	240A-45
01550-1060A	120C-32
	300A-2

PART NO.	FIG.NO.-REF.NO.
	302B-16
01550-1070A	176B-19
01550-1080A	952E-3
	952F-3
01550-1085A	300A-5
01550-1225A	286A-10
01550-1245A	128A-12
	128B-12
01550-1255A	286A-11
	298A-30
01550-1255C	298A-2
01550-1275A	286A-12
01551-0612C	188C-35
	320A-8
	320B-8
	320C-8
	320D-8
	320D-12
	338D-9
	348D-2
	348E-12
01551-0616C	570A-13
	570B-13
	570C-13
	570D-13
	717A-24
	717B-26
	717C-21
	717D-27
	717E-27
	718A-15
	718B-15
	750A-32
	750A-33
01551-0812A	510A-8
	510B-8
	542A-8
01551-0816A	190G-19
01551-0816C	190D-22
	190F-21
	503A-27
	503B-28
	503C-27
	503D-28
	720A-10
	720A-59
	720B-10
	720B-58
01551-0820A	542A-4
	570A-5

PART NO.	FIG.NO.-REF.NO.
	570A-9
	570B-5
	570B-9
	570C-5
	570C-9
	570D-5
	570D-9
	590A-59
	590B-59
	590C-59
	590D-59
	800A-8
	800B-8
	800C-8
	800D-8
	850A-46
01551-1025A	286A-8
	850A-47
	850A-48
01551-1025C	128A-13
	128A-14
	128B-13
	128B-14
	128C-12
	128C-13
	128D-12
	128D-13
	128E-12
	128E-13
	717A-41
	717B-40
	717C-37
	717D-41
	717E-41
01560-0625B	300A-16-1
	300A-16-2
	300B-12
01570-0820A	208A-7
01580-0610A	811A-3
	811B-9
01580-0825A	590A-65
	590B-65
	590C-65
	590D-65
02112-3508A	990A-6
	990B-6
02112-3510A	990C-4
02112-7612A	810A-3
02142-0508A	392B-6
	392C-7

PART NO.	FIG.NO.-REF.NO.
02142-0512A	760A-6
	760B-6
02142-0612A	840A-9
02162-0508A	158A-34
	158B-38
02162-0610A	188C-36
	351A-22
	351B-22
	351D-22
	351E-22
	351G-22
	351H-22
02162-0612A	188A-23
	188A-24
	188B-27
	188B-28
	188C-37
	202A-15
	202B-16
	202C-18
	202D-18
	34PA-3
	34PB-3
	34PC-3
	34PD-3
	34PE-3
	34PF-3
	34PG-3
	34PH-3
	350A-57
	350B-57
	350C-58
	350D-57
	350E-57
	350F-58
	350G-57
	350H-57
	374A-14
	374B-14
	510A-9
	510B-9
	542A-9
	720A-11
	720B-11
	745A-46
	810A-4
	810A-15
	811A-19
	811B-22
	952A-29

PART NO.	FIG.NO.-REF.NO.
	952B-29
	952C-29
	952D-29
02162-0616A	150A-19
	150B-24
	150C-16
	320C-20
	336A-22
	34NA-25
	34NB-25
	34NC-24
	34ND-25
	34NE-25
	34NF-24
	34NG-25
	34NH-25
	510A-10
	510B-10
	542A-10
	720A-60
	720B-59
	824A-2
02162-0616B	184A-12
	184B-12
02162-0620C	260A-8
	260B-9
	260C-8
02162-0625A	503A-29
	503B-30
	503C-29
	503D-30
	590A-66
	590B-66
	590C-66
	590D-66
03112-0416A	732A-45
	732B-49
	732C-48
	732D-44
	732E-49
	732F-48
03141-0512A	260C-9
	351A-13
	351B-13
	351C-13
	351D-13
	351E-13
	351F-13
	351G-13
	351H-13

PART NO.	FIG.NO.-REF.NO.
	720A-12
	720A-13
	720A-14
	720A-15
	720A-16
	720A-17
	720A-18
	720A-23
	720A-52
	720A-53
	720A-54
	720B-12
	720B-13
	720B-14
	720B-15
	720B-16
	720B-17
	720B-18
	720B-23
	720B-51
	720B-52
	720B-53
	740A-15
	740B-19
	740C-15
	740D-19
03141-0512B	740A-16
	740C-16
03141-0516A	336A-18
03211-0512B	453A-14
	453B-14
	453C-12
	453D-12
03241-0512A	392A-7
03241-0516D	717A-25
	717B-27
	717C-22
	717D-28
	717E-28
	750A-34
03241-0612A	755A-8
	755B-8
	777A-56
	800A-31
	800B-31
	800C-31
	800D-31
	801A-28
	801B-28
03511-0416A	150A-32

PART NO.	FIG.NO.-REF.NO.
	150B-29
	150C-21
03511-0512C	774A-17
03541-0410A	350A-5
	350A-7
	350B-5
	350B-7
	350C-5
	350C-7-1
	350C-7-2
	350D-5
	350D-7
	350E-5
	350E-7
	350F-5
	350F-7-1
	350F-7-2
	350G-5
	350G-7
	350H-5
	350H-7
	392B-17
	392C-20
03541-0412A	351A-28
	351B-28
	351C-22
	351D-28
	351E-28
	351F-22
	351G-28
	351H-28
03541-0416A	350A-3
	350B-3
	350C-3
	350D-3
	350E-3
	350F-3
	350G-3
	350H-3
	805A-25
	805B-26
03541-0512A	350A-33
	350B-33
	350C-33
	350D-33
	350E-33
	350F-33
	350G-33
	350H-33
	717B-28-2

PART NO.	FIG.NO.-REF.NO.
	717C-23
	717D-29-2
	717E-29-2
	718A-8
	718B-8
03541-0516A	324A-4
	324B-4
	324C-4
	324D-4
	324E-4
	324F-4
	332A-6
	332B-8
	392A-8
	392A-9
	392B-7
	392C-8
	392C-11
	717A-26
	717A-27
	717A-28
	717A-29
	717A-30
	717A-35
	717B-28-1
	717B-29
	717B-30
	717B-31
	717B-32
	717C-24
	717C-25
	717C-26
	717C-31
	717D-29-1
	717D-30
	717D-31
	717D-32
	717D-33
	717E-29-1
	717E-30
	717E-31
	717E-32
	717E-33
	718A-16
	718A-17
	718B-16
	718B-17
	720A-19
	720A-31
	720A-55

PART NO.	FIG.NO.-REF.NO.
	720A-56
	720A-61
	720B-19
	720B-31
	720B-54
	720B-55
	720B-60
	730A-9
	730B-9
	730C-9
	73AB-5
	740A-17
	740A-18
	740B-20
	740B-21
	740C-17
	740C-18
	740D-20
	740D-21
03541-0612A	350A-23
	350B-23
	350C-23
	350D-23
	350E-23
	350F-23
	350G-23
	350H-23
04211-09149	288A-11
	288B-11
	298A-28
04211-13149	206A-10
04211-13189	112A-4
	112B-4
	112C-6
04221-04089	124C-19
04221-06129	120A-26
	120B-22
	120C-22
	208B-12
04221-06189	188A-39
	188B-45
	18PA-9
	300B-3
06111-10003	208B-13
07120-0620A	115A-17
	115B-17
	115C-17
07130-0625A	115A-12
	115B-12
	115C-12

PART NO.	FIG.NO.-REF.NO.
	176A-9
	176B-9
07130-0820B	172C-4
08133-63057	204A-12
08310-0010A	370A-4
	370B-4
08310-0012A	400A-14
08313-2006A	190D-23
	190F-22
	190G-20
08313-2010A	850A-49
08316-1005A	801A-53
	801A-60
	801B-53
	801B-60
08316-1006A	115A-13
	115B-13
	115C-13
	142A-6
	142B-3
	150A-30
	153A-18
	154A-19
	154C-25
	159B-20
	190A-2
	190B-2
	190C-4
	190D-24
	190E-4
	190F-23
	190G-21
	260A-7
	260B-8
	260C-10
	350A-44
	350B-44
	350C-45
	350D-44
	350E-44
	350F-45
	350G-44
	350H-44
	351A-50
	351B-49
	351C-42
	351D-51
	351E-50
	351F-43
	351G-49

PART NO.	FIG.NO.-REF.NO.
	351H-50
	376A-7
	453A-18
	453B-18
	453C-16
	453D-16
	490A-4
	490B-4
	490C-2
	490D-2
	542A-11
	800A-11
	800B-11
	800C-11
	800D-11
	801A-11
	801B-11
	805A-31
	805B-32
	835A-7
	835B-7
	835C-7
	835D-7
	835E-7
	835F-7
	835G-11
08316-1006C	150B-16
	153A-19
	192A-14
08316-1008A	130A-6
	130B-6
	130C-7
	180A-4
	180B-4
	188A-40
	188B-46
	18PA-10
	260A-5
	260B-6
	260C-5
	300A-3
	300A-6
	300B-18
	302B-17
	318A-8
	320C-19
	320C-43
	34PA-14
	34PB-14
	34PC-14

PART NO.	FIG.NO.-REF.NO.	PART NO.	FIG.NO.-REF.NO.	PART NO.	FIG.NO.-REF.NO.
	34PD-14	08316-1012A	453A-7	09103-08366	208A-11
	34PE-14		453B-7	09103-08384	298A-19
	34PF-14		453C-5	09103-08419	208A-12
	34PG-14		453D-5		208B-39
	34PH-14	08316-1012C	298A-3	09103-08516	210A-7
	351A-15	08316-2005A	184A-8		210B-7
	351A-21		184B-8	09103-08517	210A-8
	351B-15	08322-0110A	208A-14		210B-8
	351B-21	08331-4115A	176A-7	09103-08533	800A-34
	351C-15		176B-7		800B-34
	351D-15	08331-41529	288A-12		800C-34
	351D-21		288B-12		800D-34
	351E-15	08331-41559	291A-23		801A-31
	351E-21	08332-1106A	208B-34		801B-31
	351F-15	08332-1110A	208B-35	09103-10189	124A-4
	351G-15	08341-31059	120A-22		124B-4
	351G-21		120B-18		272A-10
	351H-15	08361-1506A	805A-28		272B-9
	351H-21		805B-29		272C-10
	600A-60	08361-2506A	732A-47		272D-9
	600B-65		732B-52	09103-10309	282A-15
	600C-61		732C-51		282B-15
	600D-66		732D-46	09103-10373	530A-20
08316-1008C	154D-9		732E-52	09103-10440	120A-20
08316-1010A	206A-26		732F-51		120B-26
	206B-15		772B-16		120C-25
	240A-46	08361-2508A	801A-8		210A-6
	267A-3		801B-8		210B-6
	286A-13		805A-5	09103-10727	176A-19
	408A-6		805B-5	09103-11002	840A-7
	408B-7	08361-3508A	260C-11		840A-20
	490A-17	09100-10226	490A-13	09103-12079	286A-9
	490C-15		490C-11	09103-12080	430A-12
	848A-32	09103-06130	112A-12		430B-13
	848B-34	09103-06267	112A-18	09103-14032	400A-11
	848C-27		112B-18	09106-06099	298A-14
	848D-29		172A-14	09108-06153	142C-3
	849A-28		172B-12	09108-08294	130A-4
	849B-30		192A-10		130B-4
	849C-30	09103-06283	300A-13		130C-5
	849D-32		300B-9	09108-08297	154A-13
08316-1010B	282A-37		758A-3		154B-7
	282B-37	09103-06285	206A-14		154C-8
08316-1010C	128A-15		206A-16	09108-12018	298A-20
	128A-16	09103-06286	112B-12	09111-06086	805A-4
	128B-15		120A-25		805B-4
	128B-16		120B-21	09112-08015	800A-10
	128C-14		120C-21		800B-10
	128D-14	09103-06549	112C-11		800C-10
	128E-14	09103-08283-A05	208B-10		800D-10

PART NO.	FIG.NO.-REF.NO.	PART NO.	FIG.NO.-REF.NO.	PART NO.	FIG.NO.-REF.NO.
	801A-10		34ND-22		350C-52
	801B-10		34ND-23		350D-47
09113-08001	800A-7		34NE-22		350D-51
	800B-7		34NE-23		350E-47
	800C-7		34NF-21		350E-51
	800D-7		34NF-22		350F-48
09113-12005	128A-19		34NG-22		350F-52
	128B-19		34NG-23		350G-47
	128C-17		34NH-22		350G-51
	128D-17		34NH-23		350H-47
	128E-17		34PA-2		350H-51
09113-12009	128A-20		34PA-13	09116-06009	720A-9
	128B-20		34PA-16		720B-9
	128C-18		34PB-2	09116-06150	188C-21
	128D-18		34PB-13	09116-06181	952A-9
	128E-18		34PB-16		952B-9
09115-06004	350A-10		34PC-2		952C-9
	350A-15		34PC-13		952D-9
	350B-10		34PC-16		952E-6
	350B-15		34PD-2		952F-6
	350C-10		34PD-13	09116-06185	159A-11
	350C-15		34PD-16		159B-15
	350D-10		34PE-2		159C-13
	350D-15		34PE-13	09116-06205	150B-14
	350E-10		34PE-16		865A-22
	350E-15		34PF-2		865B-22
	350F-10		34PF-13	09116-06241	772B-14
	350F-15		34PF-16	09116-12010	480A-14
	350G-10		34PG-2		480B-14
	350G-15		34PG-13	09117-08079	267A-2
	350H-10		34PG-16	09117-08096	202A-3
	350H-15		34PH-2		202B-3
	351A-10		34PH-13		202C-3
	351B-10		34PH-16		202D-3
	351C-10	09115-08004	350A-39	09117-08101	408A-5
	351D-10		350B-39		408B-6
	351E-10		350C-38	09117-08106	453A-5
	351F-10		350D-39		453B-5
	351G-10		350E-39		453C-4
	351H-10		350F-38		453D-4
09115-06005	320A-10		350G-39	09117-12012	520A-22
	320B-11		350H-39	09118-08119	590A-64
	320C-11	09115-08007	318A-5		590B-64
	320D-13	09116-05023	865A-21		590C-64
	34NA-22		865B-21		590D-64
	34NA-23	09116-05024	350A-47	09118-08167	260A-12
	34NB-22		350A-51		260B-13
	34NB-23		350B-47	09118-10073	865A-11
	34NC-21		350B-51		865B-11
	34NC-22		350C-48	09119-05018	600A-16

PART NO.	FIG.NO.-REF.NO.
	600A-17
	600A-18
	600A-38
	600B-20
	600B-21
	600B-22
	600B-43
	600C-17
	600C-18
	600C-19
	600C-39
	600D-21
	600D-22
	600D-23
	600D-44
	640A-21
	640A-43
	640A-44
	640B-21
	640B-43
	640B-44
09119-06094	600B-23
	600D-24
09119-06118	805A-24
	805B-25
09119-08097	848A-33
	848B-35
	848C-28
	848D-30
	849A-29
	849B-31
	849C-31
	849D-33
09119-10073	156B-10
	156C-10
09119-10087	282A-13
	282B-13
09119-12022	893A-5
09122-76006	717A-22
	717B-24
	717C-19
	717D-25
	717E-25
09125-05140	740B-16
	740D-16
09128-06090	336A-6
	350C-40
	350F-40
	718A-10
	718B-10

PART NO.	FIG.NO.-REF.NO.
09132-05043	848A-30
	848B-32
	848C-25
	848D-27
	849A-26
	849B-28
	849C-28
	849D-30
09132-05053	580A-14
	580B-14
	717A-23
	717B-25
	717C-20
	717D-26
	717E-26
	718A-11
	718B-11
09132-05058	350A-12
	350B-12
	350C-12
	350D-12
	350E-12
	350F-12
	350G-12
	350H-12
	800A-21
	800B-21
	800C-21
	800D-21
	801A-21
	801B-21
	820A-19
	820B-19
	820C-19
	820D-19
	821A-15
	821B-15
09135-06027	206A-12
	300A-20
	300B-22
09135-12020	430A-3
	430B-3
09135-14018	400A-24
09136-05030	453A-12
	453B-12
	453C-10
	453D-10
09136-05067	801A-61
	801B-61
09136-06141	150C-7

PART NO.	FIG.NO.-REF.NO.
	848A-11
	159A-12
	159C-14
09137-06032	820A-4
	820B-4
	820C-4
	820D-4
	821A-3
	821B-3
09139-05061	835A-12
	835B-16
	835C-16
	835D-12
	835E-16
	835F-16
	835G-20
09139-05063	811B-4
	811B-8
09139-08025	820A-6
	820B-6
	820C-6
	820D-6
	821A-5
	821B-5
	824A-4
09140-10043	351A-24
	351A-26
	351B-24
	351B-26
	351C-18
	351C-20
	351D-24
	351D-26
	351E-24
	351E-26
	351F-18
	351F-20
	351G-24
	351G-26
	351H-24
	351H-26
09140-12039	480A-15
	480B-15
09140-12050	400A-12
09148-05031	350A-13
	350B-13
	350C-13
	350D-13
	350E-13
	350F-13

PART NO.	FIG.NO.-REF.NO.
	350G-13
	350H-13
	820A-20
	820B-20
	820C-20
	820D-20
	821A-16
	821B-16
09148-05037	741A-2
	741A-13
	741A-15
	741B-2
	741B-13
	741B-15
09148-05044	718A-12
	718B-12
	774A-13
09148-05045	324A-3
	324B-3
	324C-3
	324D-3
	324E-3
	324F-3
	392A-6
	392B-5
	392C-6
	720A-22
	720A-48
	720A-49
	720A-50
	720B-22
	720B-47
	720B-48
	720B-49
	740A-13
	740B-17
	740C-13
	740D-17
09148-05047	580A-5
	580A-7
	580B-5
	580B-7
	750A-28
09148-05059	320C-17
	750A-42
09148-05074	350A-32
	350B-32
	350C-32
	350D-32
	350E-32

PART NO.	FIG.NO.-REF.NO.
	350F-32
	350G-32
	350H-32
09148-06007	350A-22
	350B-22
	350C-22
	350D-22
	350E-22
	350F-22
	350G-22
	350H-22
	755A-7
	755B-7
	777A-53
	800A-30
	800B-30
	800C-30
	800D-30
	801A-27
	801B-27
09159-06076	160A-9
	160B-8
	160C-8
	190A-12
	190B-13
	190C-14
	190D-17
	190E-15
	350A-48
	350A-52
	350B-48
	350B-52
	350C-49
	350C-53
	350D-48
	350D-52
	350E-48
	350E-52
	350F-49
	350F-53
	350G-48
	350G-52
	350H-48
	350H-52
	351A-18
	351A-43
	351A-45
	351B-18
	351B-42
	351B-44

PART NO.	FIG.NO.-REF.NO.
	351C-35
	351C-37
	351D-18
	351D-42
	351D-44
	351D-46
	351E-18
	351E-41
	351E-43
	351E-45
	351F-34
	351F-36
	351F-38
	351G-18
	351G-42
	351G-44
	351H-18
	351H-41
	351H-43
	351H-45
	500C-18
	500D-17
	740A-14
	740B-18
	740C-14
	740D-18
	777A-54
	840A-21
09159-06086	732A-46
	732B-51
	732C-50
	732D-45
	732E-51
	732F-50
09159-06096	336A-11
09159-06100	336A-13
09159-06107	300A-18
	300A-21
	300B-20
	300B-23
09159-08075	286A-7
09159-08127	202A-12
	202B-13
	202C-14
	202D-14
	490A-3
	490A-7
	490A-18
	490B-3
	490B-7

PART NO.	FIG.NO.-REF.NO.
	490C-5
	490C-16
	490D-6
	500A-11
	500B-11
	500C-11
	500D-11
09159-08130	154A-14
	154B-8
	154B-9
	154C-9
09159-08132	801A-7
	801B-7
09159-08135	453A-13
	453B-13
	453C-11
	453D-11
09159-10102	156A-9
	156A-16
	156B-16
	156C-16
09159-11004	840A-8
09159-14031	400A-13
09159-14033	400A-25
09159-16021	288A-6
	288B-6
09159-18026	430B-14
09159-20009	204A-20
	204A-37
09159-20016	291A-10
09159-24011	282A-16
	282B-16
09160-08151	260A-6
	260B-7
09160-12109	430A-10
	430B-10
09160-13503	208B-30
09160-21005	204A-38
09160-35002	282A-17-3
	282B-17-3
09160-35003	282A-17-5
	282B-17-5
09160-35004	282A-17-7
	282B-17-7
09160-35006	282A-17-1
	282B-17-1
09160-35008	282A-17-2
	282B-17-2
09160-35009	282A-17-4
	282B-17-4

PART NO.	FIG.NO.-REF.NO.
09160-35010	282A-17-6
	282B-17-6
09160-38003	272A-13-1
	272B-12-1
	272C-13-1
	272D-12-1
09160-38004	272A-13-2
	272B-12-2
	272C-13-2
	272D-12-2
09160-38005	272A-13-3
	272B-12-3
	272C-13-3
	272D-12-3
09160-38006	272A-13-4
	272B-12-4
	272C-13-4
	272D-12-4
09160-38007	272A-13-5
	272B-12-5
	272C-13-5
	272D-12-5
09160-38008	272A-13-6
	272B-12-6
	272C-13-6
	272D-12-6
09160-38009	272A-13-7
	272B-12-7
	272C-13-7
	272D-12-7
09160-38010	272A-13-8
	272B-12-8
	272C-13-8
	272D-12-8
09161-10009	158A-14
	158B-14
	158C-14
	503A-23
	503B-24
	503C-23
	503D-24
09161-18004	204A-42
09164-15003	282A-18
	282B-18
09164-17011	272A-11
	272B-10
	272C-11
	272D-10
09164-35003	282A-19
	282B-19

PART NO.	FIG.NO.-REF.NO.
09168-08016	158A-15
09168-08030	204A-43
09168-12017	188B-21
09168-14011	206A-5
	206B-16
09168-14015	115A-8
	115B-8
	115C-8
09168-14019	188C-22
09169-05024	176A-6
	176B-6
09180-10121	490A-14
	490C-12
09180-25101	288A-7
	288B-7
09181-30001	282A-30-1
	282B-30-1
09181-41002	204A-21-1
09181-41003	204A-21-2
09181-41004	204A-21-3
09181-41005	204A-21-4
09181-41006	204A-21-5
09181-41007	204A-21-6
09181-41008	204A-21-7
09181-41009	204A-21-8
09181-41010	204A-21-9
09181-41011	204A-21-10
09181-41012	204A-21-11
09181-41013	204A-21-12
09181-41014	204A-21-13
09200-08048	500A-12
	500B-12
	500C-12
	500D-12
09202-08004	112A-13
	112B-13
	112C-12
	115A-9
	115B-9
	115C-9
	298A-1
09205-03035	204B-49
09205-03042	208B-20
	208B-31
09205-04013	208B-22
09205-05007	272A-12
	272B-11
	272C-12
	272D-11
09205-05016	282A-20

PART NO.	FIG.NO.-REF.NO.
	282B-20
09205-06020	208B-21
	208B-32
09206-05001	124A-5
	124B-5
	124C-6
09206-06005	176A-13
	176B-13
	176C-7
	180C-5
09206-08001	111A-9
	111B-7
	111B-10
	111C-6
	111C-9
09206-13020	111A-16
	111B-17
	111C-15
09209-14001	570A-18
	570B-18
	570C-18
	570D-18
09241-20006	206B-17
09246-05006	111A-10
	111B-11
	111C-10
	112C-4
	298A-15
09246-08004	111B-12
	111C-11
	282A-8
	282B-8
09246-16010	206A-6
	206A-7
	206B-2
	282A-21
	282A-22
	282B-21
	282B-22
	298A-21
	298A-22
09247-14029	206A-8
	206B-18
09248-10006	208B-11
09248-12005	111A-11
	111B-13
09248-18011	111A-12
	111B-14
	111C-12
	112A-6

PART NO.	FIG.NO.-REF.NO.
	112B-6
	112C-5
	206B-19
09248-22007	111A-13
09250-10023	750A-11
	772A-5
	772B-5
09250-15012	772A-6
	772B-6
09250-15015	750A-12
	750A-13
	750A-14
09250-17001	772A-7
	772A-8
	772A-9
	772B-7
	772B-8
	772B-9
09250-20015	750A-15
	750A-16
	750A-17
	760A-7
	760A-8
	760B-7
	760B-8
09250-20023	805A-30
	805B-31
09250-20032	750A-18
09250-25007	750A-19
	820A-14
	820B-14
	820C-14
	820D-14
09262-25072	288A-8
	288B-8
09262-25106	204A-8
	204B-12
09262-30120	291A-11-1
09262-30125	291A-11-2
09262-40016	291A-12
09262-50002	291A-13-2
09262-50006	291A-13-1
09263-35027	204A-9
09263-35039	204A-22
09263-37005	204B-13
09263-37009	204A-23
09265-25034	282A-23
	282B-23
09265-25039	291A-14
09265-25041	204A-24

PART NO.	FIG.NO.-REF.NO.
09265-30010	282A-24
	282B-24
09265-30018	291A-15
09265-30021	204A-25
09265-30023	291A-16
09265-30026	204B-32
09265-35013	282A-25
	282B-25
09265-35014	291A-17
09280-10009	298A-23
09280-11002	206A-28
	206B-24
	300B-15
09280-17002	115A-16
	115B-16
	115C-16
	176A-14
	176B-14
	176C-8
09280-28008	105A-11
	105B-11
	105C-13
	188A-29
	188B-35
	188C-23
09280-46002	480A-3
	480B-3
09280-71009	298A-24
09280-86002	298A-25
09283-18009	208B-33
09283-25088	204A-10
	204B-14
09283-35049	288A-9
	288B-9
09283-35057	282A-26
	282B-26
09283-35061	291A-18
09283-40038	291A-19
09283-41002	120A-27
	120B-24
	176A-8
	176B-8
09283-42021	291A-20
09283-50010	282A-27
	282B-27
09283-50011	291A-22-2
09283-50012	291A-21-2
09283-50014	291A-21-1
	291A-22-1
09307-13005	490A-15

PART NO.	FIG.NO.-REF.NO.
	490C-13
09321-06026	490A-16
	490C-14
09321-10023	570A-33
	570B-33
	570C-33
	570D-33
09352-50005-600	282A-32
	282B-32
09352-70111-600	188A-16
	188B-19
09352-70113-600	282A-33
	282A-34
	282B-33
	282B-34
09355-35002-100	130A-16
	158B-31
09360-10026	503A-24
	503B-25
	503C-24
	503D-25
09360-10046	503A-25
	503B-26
	503C-25
	503D-26
09364-06007	282A-9
	282B-9
09364-08004	206A-19
09364-08016	111A-3
	111B-3
09364-08017	282A-10
	282B-10
09364-12001	112A-2
	112B-2
09367-08005	282A-35
	282B-35
09380-72002	204A-11
09381-18002	120A-2
	120B-2
09381-19001	120C-2
09381-22015	282A-14
	282B-14
09381-84004	400A-30
09383-13003	503A-26
	503B-27
	503C-26
	503D-27
	542A-7
09385-08007	500A-13
	500B-13

PART NO.	FIG.NO.-REF.NO.
	500C-13
	500D-13
09385-12002	480A-16
	480B-16
09385-14001	400A-26
09387-19001	848A-7
	848A-22
	848B-7
	848B-24
	848C-17
	848D-19
	849A-24
	849B-26
	849C-6
	849C-26
	849D-6
	849D-28
	850A-3
	850A-18
	850A-36
09400-45411	865A-23
	865B-23
09401-06405	130A-17
	158A-28
	158B-32
09401-11419	154A-20
	154C-19
	154D-16
	190A-5
	190A-13
	190A-14
	190B-5
	190B-14
	190B-15
	190C-7
	190C-15
	190C-16
	190D-18
	190E-7
	190E-16
	190E-17
	190F-16
09401-11433	172C-12
09401-12405	190D-19
	190F-17
	190G-15
	202A-13
	202B-14
	202C-15
	202D-15

PART NO.	FIG.NO.-REF.NO.
09401-12410	154D-17
09401-13414	130A-10
	130B-10
	130C-11
09401-13419	154A-21
	154C-20
	160B-9-1
	172A-17
	172B-16
09401-13431	188A-18
	188B-22
	188C-24
09401-13434	160A-5
	160B-9-2
	160C-9
09401-14405	188C-25
09401-15404	158A-16
	158B-15
	158C-15
09401-15L02	500A-15
	500B-15
	500C-17
	500D-18
09401-16301	158A-17
	158B-16
09401-16403	865B-24
09401-16407	865A-24
09401-18403	188A-28-1
	248A-8
	248B-8
09401-18404	130A-11
	130B-11
	130C-12
	150A-22
	150B-27
	150C-19
09401-18418	188C-26
	188C-27
09401-20407	248A-9
	248B-9
09401-21405	188A-27
	188A-28-2
	188B-34
09401-21415	188C-28
	188C-29
	188C-45
09401-24402	158A-29
	158B-33
09401-30001	188A-20
09401-30405	188B-23

PART NO.	FIG.NO.-REF.NO.
09401-35001	188A-19
	188C-30
09401-35403	188B-24
09402-46511	150A-36
09402-57511	150A-37
	150C-14
09402-69511	150A-17
	150B-23
	150C-12
09402-82511	150A-16
	150C-15
09403-04401	570A-16
	570B-16-1
	570B-16-2
	570C-16
	570D-16
09403-07407	570A-19
	570B-19
	570C-19
	570D-19
09403-08315	130A-18
	158B-34
	159B-16
	159B-17
09403-08321	130A-19
	153A-12
09403-11314	206A-20
	282A-36
	282B-36
09403-11320	240A-42
09403-12L06	154A-22
09403-13309	777A-55
09403-13409	154B-14
09403-16307	500B-16
	500D-19
09403-17306	190G-16
09403-20307	248A-10
09407-14413	360B-14
09407-18402	34NA-38
	34NB-38
	34NC-37
	34ND-38
	34NE-38
	34NF-37
	34NG-38
	34NH-38
09408-00033	158A-30
	158B-35
09408-00121	154A-23
	154C-21

PART NO.	FIG.NO.-REF.NO.
09408-00230	150A-28
09408-00258	154C-22
09408-00294	158B-36
09408-00306	190B-16
	190E-18
	190F-18
09408-00345	190D-20
	190F-19
	190G-17
09409-04309	800A-38
	800A-42
	800B-38
	800B-42
	800C-38
	800C-42
	800D-38
	800D-42
	801A-37
	801A-43
	801A-51
	801A-58
	801B-37
	801B-43
	801B-51
	801B-58
09409-05303-5PK	570A-31
	570B-31
	570C-31
	570D-31
09409-06314-5PK	801A-22
	801B-22
	952A-10
	952B-10
	952C-10
	952D-10
09409-06322	318A-6
	418A-5
	73AA-8
	73AB-3
09409-06324	801A-52
	801A-59
	801B-52
	801B-59
09409-06326-5PK	320C-40
09409-06326-6GS	760A-5
	760B-5
09409-07308-5PK	745A-45
09409-07335	745A-25
	745A-28
	805A-13

PART NO.	FIG.NO.-REF.NO.
	805B-13
09409-07340	184C-15
	374A-7
	374B-7
	570A-11
	570B-11
	570C-11
	570D-11
	580A-15
	580B-15
	717A-36
	717B-35
	717C-32
	717D-36
	717E-36
	718A-13
	718B-13
	720A-51
	720B-50
	750A-30
	750A-31
	750A-43
	750A-44
	774A-14
	774A-15
	952A-11
	952B-11
	952C-11
	952D-11
09409-08327	320C-18
	330A-18
	330B-16
	330C-8
	570A-32
	570B-32
	570C-32
	570D-32
	718A-14
	718B-14
	750A-45
09409-08342	392B-2
	392C-2
	720A-29
	720A-33
	720A-35
	720A-38
	720B-29
	720B-33
	720B-35
	720B-38

PART NO.	FIG.NO.-REF.NO.	PART NO.	FIG.NO.-REF.NO.	PART NO.	FIG.NO.-REF.NO.
	73AA-7		801A-15		338A-9
	73AB-2		801A-18		338B-5
	740A-2		801B-15		338B-10
	740B-2		801B-18		338C-5
	740C-2		805A-14		338C-10
	740D-2		805B-14		338D-2
09409-10302-5PK	741A-3	09409-10313	745A-3		338D-4
	741B-3		745A-6		338D-6
09409-10312	580A-11	09409-10314	570A-27	09471-12238	332A-2
	580A-13		570A-29	09481-07504	34NA-2
	580B-11		570B-27		34NB-2
	580B-13		570B-29		34NC-2
	740A-5		570C-27		34ND-2
	740A-8		570C-29		34NE-2
	740B-7		570D-27		34NF-2
	740B-10		570D-29		34NG-2
	740C-5	09409-10318	774A-6		34NH-2
	740C-8		774A-8		34PA-7
	740D-7		774A-10		34PB-7
	740D-10		774A-12		34PC-7
	745A-2	09409-15302	750A-46		34PD-7
	745A-5		774A-16		34PE-7
	745A-8	09421-05009	120C-18		34PF-7
	745A-10	09471-12045	336A-2		34PG-7
	745A-15		336A-4		34PH-7
	745A-17	09471-12091	338B-13	09481-10504	34NA-3
	745A-26		338C-13		34NB-3
	745A-29		338D-11		34NC-3
	745A-33	09471-12151	330A-5		34ND-3
	745A-39		330A-13		34NE-3
	750A-24		330B-5		34NF-3
	750A-26		330B-12		34NG-3
	774A-2	09471-12181	338A-3		34NH-3
	774A-4		338B-3		34PA-8
	800A-15		338C-3		34PB-8
	800A-18	09471-12186	330A-6		34PC-8
	800A-23		330A-14		34PD-8
	800A-25		330B-6		34PE-8
	800B-15		330B-13		34PF-8
	800B-18		330C-3		34PG-8
	800B-23		330C-6		34PH-8
	800B-25	09471-12191	336A-21	09481-15504	34NA-4-1
	800C-15	09471-12210	330A-7		34NA-4-2
	800C-18		330A-15		34NB-4-1
	800C-23		332B-2		34NB-4-2
	800C-25	09471-12216	330A-8		34NC-4
	800D-15		330A-16		34ND-4-1
	800D-18		330B-7		34ND-4-2
	800D-23		330B-14		34NE-4-1
	800D-25		336A-15		34NE-4-2

PART NO.	FIG.NO.-REF.NO.	PART NO.	FIG.NO.-REF.NO.	PART NO.	FIG.NO.-REF.NO.
	34NF-4		34PF-12	09827-00004	893A-4
	34NG-4-1		34PG-12		
	34NG-4-2		34PH-12		
	34NH-4-1	09481-30504	34NA-7-1		
	34NH-4-2		34NA-7-2		
	34PA-9		34NB-7-1		
	34PB-9		34NB-7-2		
	34PC-9		34NC-7		
	34PD-9		34ND-7-1		
	34PE-9		34ND-7-2		
	34PF-9		34ND-7-3		
	34PG-9		34ND-7-4		
	34PH-9		34ND-7-5		
09481-20504	34NA-5		34ND-7-6		
	34NB-5		34NE-7-1		
	34NC-5		34NE-7-2		
	34ND-5		34NE-7-3		
	34NE-5		34NE-7-4		
	34NF-5		34NE-7-5		
	34NG-5		34NE-7-6		
	34NH-5		34NF-7		
	34PA-10		34NG-7-1		
	34PB-10		34NG-7-2		
	34PC-10		34NH-7-1		
	34PD-10		34NH-7-2		
	34PE-10		34NH-7-3		
	34PF-10		34NH-7-4		
	34PG-10		34NH-7-5		
	34PH-10		34NH-7-6		
09481-25504	34NA-6		34PA-11		
	34NB-6		34PB-11		
	34NC-6		34PC-11		
	34ND-6		34PD-11		
	34NE-6		34PE-11		
	34NF-6		34PF-11		
	34NG-6		34PG-11		
	34NH-6		34PH-11		
09481-30403	34NA-8	09481-40403	34NA-9		
	34NB-8		34NB-9		
	34NC-8		34NC-9		
	34ND-8		34ND-9		
	34NE-8		34NE-9		
	34NF-8		34NF-9		
	34NG-8		34NG-9		
	34NH-8		34NH-9		
	34PA-12	09481-50403	34NC-10		
	34PB-12		34NF-10		
	34PC-12	09482-00642	111A-22		
	34PD-12		111B-22		
	34PE-12	09482-00663	111C-20		

SUZUKI **APK310(TYPE 3)** **APK414(TYPE 3,4)** PARTS CATALOGUE

SUZUKI MOTOR CORPORATION All rights reserved
No part of this document may be reproduced or transmitted in any form or by any means, electronic or mechanical, for any purpose, without the express written permission of Suzuki Motor Corporation.

SUZUKI MOTOR CORPORATION
Service Material Development Group, Service Engineering Dept.
300 Takatsuka, Minami, Hamamatsu, Japan

Copyright © SUZUKI MOTOR CORPORATION 2018 All Rights Reserved

SUZUKI MOTOR CORPORATION

PRINTED IN JAPAN

9900B-40320-003